http://www.xiaoyu163.com

CDX-GT48UM/GT480U/ GT480US/GT484US

SERVICE MANUAL

Ver. 1.0 2008.11

E Model
CDX-GT480U/GT480US
Indian Model
CDX-GT48UM/GT484US

Photo: CDX-GT480US

- The tuner and CD sections have no adjustments.

Model Name Using Similar Mechanism	NEW
CD Drive Mechanism Type	MG-101Y-188//C
Optical Pick-up Name	DAX-25A

SPECIFICATIONS

CD player section
Signal-to-noise ratio: 120 dB
Frequency response: 10 – 20,000 Hz
Wow and flutter: Below measurable limit

Tuner section
FM
Tuning range:
87.5 – 108.0 MHz (at 50 kHz step)
87.5 – 107.9 MHz (at 200 kHz step)
FM tuning interval: 50 kHz/200 kHz switchable
Antenna (aerial) terminal:
External antenna (aerial) connector
Intermediate frequency: 150 kHz
Usable sensitivity: 10 dBf
Selectivity: 75 dB at 400 kHz
Signal-to-noise ratio: 70 dB (mono)
Separation: 40 dB at 1 kHz
Frequency response: 20 – 15,000 Hz

AM
Tuning range:
531 – 1,602 kHz (at 9 kHz step)
530 – 1,710 kHz (at 10 kHz step)
AM tuning interval: 9 kHz/10 kHz switchable
Antenna (aerial) terminal:
External antenna (aerial) connector
Intermediate frequency: 25 kHz
Sensitivity: 26 µV

USB Player section
Interface: USB (Full-speed)
Maximum current: 500 mA

Power amplifier section
Outputs: Speaker outputs (sure seal connectors)
Speaker impedance: 4 – 8 ohms
Maximum power output: 52 W × 4 (at 4 ohms)

General
Outputs:
Audio outputs terminal
(front, sub/rear switchable)
Power antenna (aerial) relay control terminal
Power amplifier control terminal
Inputs:
Remote controller input terminal
Antenna (aerial) input terminal
AUX input jack (stereo mini jack)
USB signal input terminal

Tone controls:
Low: ±10 dB at 60 Hz (XPLOD)
Mid: ±10 dB at 1 kHz (XPLOD)
High: ±10 dB at 10 kHz (XPLOD)
Power requirements: 12 V DC car battery (negative ground (earth))
Power supply voltage: 11 – 16 V
Dimensions: Approx. 178 × 50 × 179 mm (7 1/8 × 2 × 7 1/8 in.) (w/h/d)
Mounting dimensions:
Approx. 182 × 53 × 162 mm (7 1/4 × 2 1/8 × 6 1/2 in.) (w/h/d)
Mass: Approx. 1.2 kg (2 lb. 11 oz.)
Supplied accessories:
Card remote commander: RM-X151
Parts for installation and connections (1 set)

Design and specifications are subject to change without notice.

FM/AM COMPACT DISC PLAYER

9-889-365-01
2008K04-1
© 2008.11

Sony Corporation
Audio&Video Business Group
Published by Sony Techno Create Corporation

SONY®

http://www.xiaoyu163.com

http://www.xiaoyu163.com

MODEL IDENTIFICATION

The CDX-GT480U and CDX-GT480US include the model manufactured in Chinese and the model manufactured in Thai. This service manual guides the model manufactured in Chinese. Check the part number specified on the model number label when performing service and inspection.

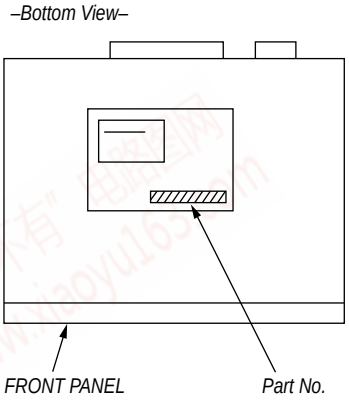

Model	Part No.
GT480U: E	4-119-904-0□ 4-119-905-0□
GT480US: E	4-119-906-0□ 4-119-907-0□
GT480US: MX	4-119-908-0□
GT480US: AR	4-119-909-0□
GT484US: IND	4-119-910-0□
GT48UM: IND	4-119-911-0□

- Abbreviation
  AR : Argentina model
  IND : Indian model
  MX : Mexican model

NOTES ON HANDLING THE OPTICAL PICK-UP BLOCK OR BASE UNIT

The laser diode in the optical pick-up block may suffer electrostatic break-down because of the potential difference generated by the charged electrostatic load, etc. on clothing and the human body.
During repair, pay attention to electrostatic break-down and also use the procedure in the printed matter which is included in the repair parts.
The flexible board is easily damaged and should be handled with care.

NOTES ON LASER DIODE EMISSION CHECK

The laser beam on this model is concentrated so as to be focused on the disc reflective surface by the objective lens in the optical pickup block. Therefore, when checking the laser diode emission, observe from more than 30 cm away from the objective lens.

NOTES ON CHIP COMPONENT REPLACEMENT

- Never reuse a disconnected chip component.
- Notice that the minus side of a tantalum capacitor may be damaged by heat.

TEST DISCS

Please use the following test discs for the check on the CD section.

YDES-18 (Part No. 3-702-101-01)
PATD-012 (Part No. 4-225-203-01)

CAUTION
Use of controls or adjustments or performance of procedures other than those specified herein may result in hazardous radiation exposure.

If the optical pick-up block is defective, please replace the whole optical pick-up block.
Never turn the semi-fixed resistor located at the side of optical pick-up block.

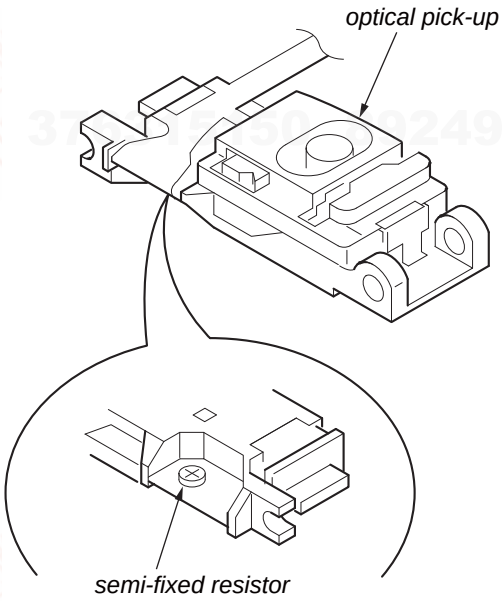

SAFETY-RELATED COMPONET WARNING!

COMPONENTS IDENTIFIED BY MARK ⚠ OR DOTTED LINE WITH MARK ⚠ ON THE SCHEMATIC DIAGRAMS AND IN THE PARTS LIST ARE CRITICAL TO SAFE OPERATION. REPLACE THESE COMPONENTS WITH SONY PARTS WHOSE PART NUMBERS APPEAR AS SHOWN IN THIS MANUAL OR IN SUPPLEMENTS PUBLISHED BY SONY.

http://www.xiaoyu163.com

http://www.xiaoyu163.com

This compact disc player is classified as a CLASS 1 LASER product. The CLASS 1 LASER PRODUCT label is located on the exterior.

CLASS 1
LASER PRODUCT

This label is located on the bottom of the chassis.

- **CD Playback**
  You can play CD-DA (also containing CD TEXT) and CD-R/CD-RW (MP3/WMA/AAC files).

Type of disc	Label on the disc
CD-DA	COMPACT disc DIGITAL AUDIO Recordable / COMPACT disc DIGITAL AUDIO ReWritable
MP3 WMA AAC	COMPACT disc DIGITAL AUDIO Recordable / COMPACT disc DIGITAL AUDIO ReWritable / COMPACT disc Recordable / COMPACT disc ReWritable

UNLEADED SOLDER

Boards requiring use of unleaded solder are printed with the lead-free mark (LF) indicating the solder contains no lead.
(**Caution:** Some printed circuit boards may not come printed with the lead free mark due to their particular size)

: LEAD FREE MARK

Unleaded solder has the following characteristics.

- Unleaded solder melts at a temperature about 40 °C higher than ordinary solder.
  Ordinary soldering irons can be used but the iron tip has to be applied to the solder joint for a slightly longer time.
  Soldering irons using a temperature regulator should be set to about 350 °C.
  Caution: The printed pattern (copper foil) may peel away if the heated tip is applied for too long, so be careful!
- Strong viscosity
  Unleaded solder is more viscous (sticky, less prone to flow) than ordinary solder so use caution not to let solder bridges occur such as on IC pins, etc.
- Usable with ordinary solder
  It is best to use only unleaded solder but unleaded solder may also be added to ordinary solder.

TABLE OF CONTENTS

1. SERVICE NOTE 4

2. GENERAL
Location of Controls 5
Connections 6

3. DISASSEMBLY
3-1. Sub Panel Assy 9
3-2. CD Mechanism Block 9
3-3. Main Board 10
3-4. Servo Board 10
3-5. Chassis (T) Sub Assy 11
3-6. Roller Arm Assy 11
3-7. Chassis (OP) Assy 12
3-8. Chucking Arm Sub Assy 12
3-9. Sled Motor Assy 13
3-10. Optical Pick-up Section 14
3-11. Optical Pick-up 14

4. DIAGRAMS
4-1. Block Diagram –Main Section– 15
4-2. Block Diagram –Display Section– 16
4-3. Printed Wiring Board –Main Section– 18
4-4. Schematic Diagram –Main Section (1/3)– 19
4-5. Schematic Diagram –Main Section (2/3)– 20
4-6. Schematic Diagram –Main Section (3/3)– 21
4-7. Printed Wiring Boards –Key Section– 22
4-8. Schematic Diagram –Key Section– 23

5. EXPLODED VIEWS
5-1. Main Section 29
5-2. Front Panel Section 30
5-3. CD Mechanism Section (MG-101Y-188//C) 31

6. ELECTRICAL PARTS LIST 32

http://www.xiaoyu163.com

http://www.xiaoyu163.com

SECTION 1
SERVICE NOTE

EXTENSION CABLE AND SERVICE POSITION

When repairing or servicing this set, connect the jig (extension cable) as shown below.

- Connect the MAIN board (CN701) and the SERVO board (CN401) with the extension cable (Part No. J-2502-076-1).

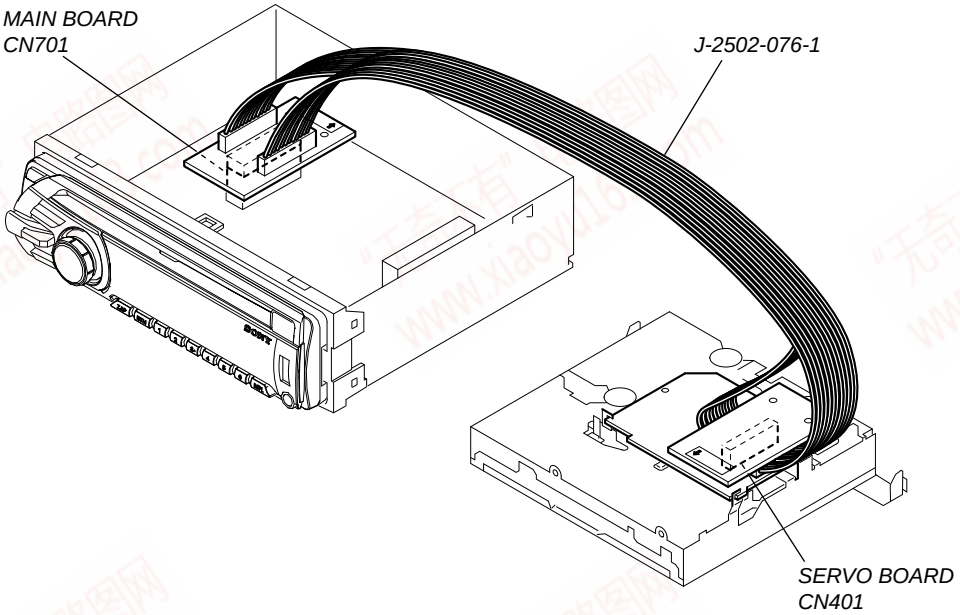

NOTE FOR REPLACEMENT OF THE USB CONNECTOR (CN902)

To replace the USB connector requires alignment.

1. Insert the USB connector into the front panel.
2. Place the KEY board on the front panel and align the terminals of the USB connector with the holes in the KEY board.
3. Solder the four terminals of the connector.

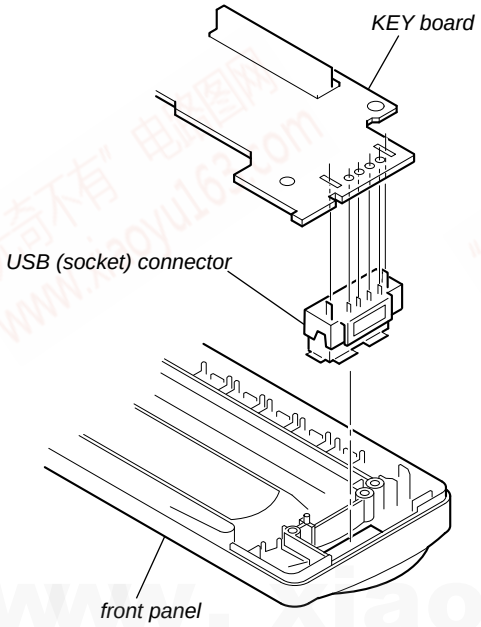

NOTE FOR REPLACEMENT OF THE SERVO BOARD

When repairing, the complete SERVO board (Part No. A-1555-002-A) should be replaced since any parts in the SERVO board cannot be repaired.

NOTE FOR THE 20-PIN CONNECTOR (CN901)

Do not use alcohol to clean the 20-pin connector (CN901) connecting the front panel with the main body.
Do not touch the connector directly with your bare hand. Poor contact may be caused.

http://www.xiaoyu163.com

http://www.xiaoyu163.com

SECTION 2
GENERAL

This section is extracted from instruction manual.

• LOCATION OF CONTROLS

Location of controls and basic operations

Main unit

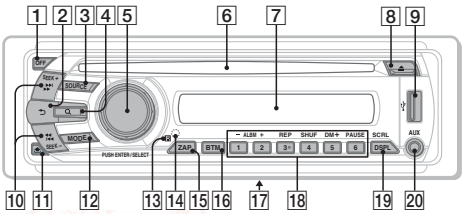

Card remote commander RM-X151

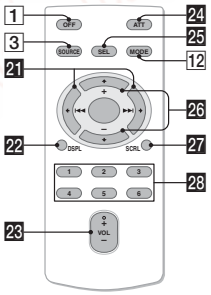

This section contains instructions on the location of controls and basic operations. For details, see the respective pages.
For USB device operation, see "USB devices" on page 10.
The corresponding buttons on the card remote commander control the same functions as those on the unit.

1 **OFF button**
To power off; stop the source.

2 **(BACK) button** page 8
To return to the previous display.

3 **SOURCE button**
To power on; change the source (Radio/CD/USB/AUX).

4 **(BROWSE) button** page 8
To enter the Quick-BrowZer mode.

5 **Control dial/select button**
To adjust volume (rotate); select setup items (press and rotate).

6 **Disc slot**
Insert the disc (label side up), playback starts.

7 **Display window**

8 **(eject) button**
To eject the disc.

9 **USB terminal** page 10
To connect to the USB device.

10 **SEEK +/– buttons**
CD/USB:
To skip tracks (press); skip tracks continuously (press, then press again within about 1 second and hold); reverse/fast-forward a track (press and hold).
Radio:
To tune in stations automatically (press); find a station manually (press and hold).

11 **(front panel release) button** page 5

12 **MODE button** page 9
To select the radio band (FM/AM).

13 **Receptor for the card remote commander**

14 **RESET button** (located behind the front panel) page 4

15 **ZAP button** page 9
To enter ZAPPIN™ mode.

16 **BTM button** page 9
To start the BTM function (press and hold).

17 **Frequency select switch** (located on the bottom of the unit)
See "Frequency select switch" in the supplied installation/connections manual.

18 **Number buttons**
CD/USB:
①/②: **ALBM –/+** (during MP3/WMA/AAC playback)
To skip albums (press); skip albums continuously (press and hold).
③: **REP** page 10, 11
④: **SHUF** page 10, 11
⑤: **DM+**
Improves digitally compressed sound, such as MP3.
To activate the DM+ function, set "ON." To cancel, set "OFF."
⑥: **PAUSE**
To pause playback. To cancel, press again.
Radio:
To receive stored stations (press); store stations (press and hold).

19 **DSPL (display)/SCRL (scroll) button** page 10, 11
To change display items (press); scroll the display item (press and hold).

20 **AUX input jack** page 13
To connect a portable audio device.

The following buttons on the card remote commander have also different buttons/functions from the unit. Remove the insulation film before use (page 4).

21 **(|◀◀)/(▶▶|) buttons**
To control radio/CD/USB, the same as (SEEK) –/+ on the unit.
Setup, sound setting, etc., can be operated by ←/→.

22 **DSPL (display) button** page 10, 11
To change display items.

23 **VOL (volume) +/– button**
To adjust volume.

24 **ATT (attenuate) button**
To attenuate the sound. To cancel, press again.

25 **SEL (select) button**
The same as the select button on the unit.

26 **(+)/(–) buttons**
To control CD/USB, the same as ①/② (ALBM –/+) on the unit.
Setup, sound setting, etc., can be operated by ↑↓.

27 **SCRL (scroll) button**
To scroll the display item.

28 **Number buttons**
To receive stored stations (press); store stations (press and hold).

Note
If the unit is turned off and the display disappears, it cannot be operated with the card remote commander unless (SOURCE) on the unit is pressed, or a disc is inserted to activate the unit first.

http://www.xiaoyu163.com

http://www.xiaoyu163.com

- **CONNECTION**
- **Except CDX-GT480US: Argentina model**

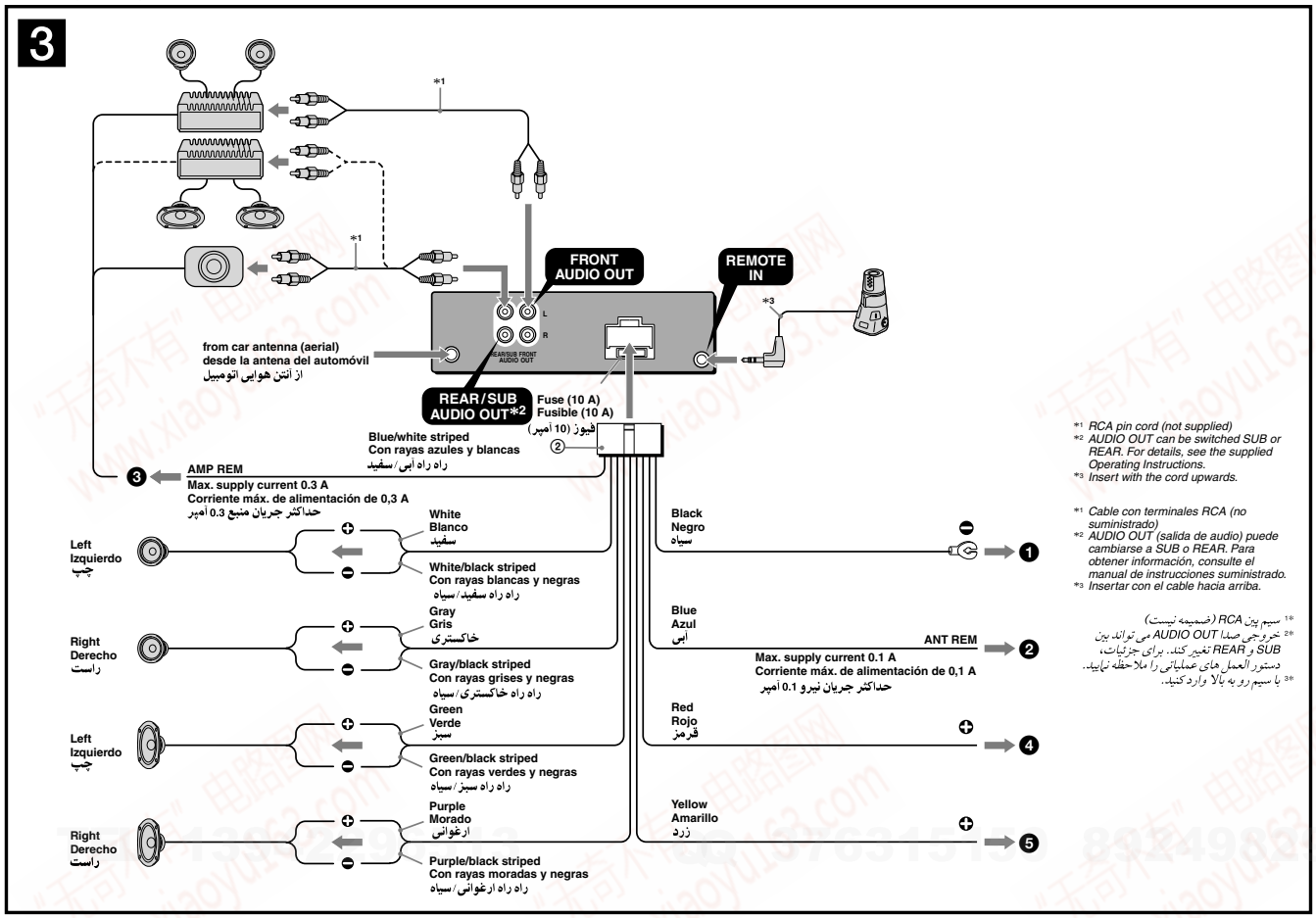

*1 RCA pin cord (not supplied)
*2 AUDIO OUT can be switched SUB or REAR. For details, see the supplied Operating Instructions.
*3 Insert with the cord upwards.

*1 Cable con terminales RCA (no suministrado)
*2 AUDIO OUT (salida de audio) puede cambiarse a SUB o REAR. Para obtener información, consulte el manual de instrucciones suministrado.
*3 Insertar con el cable hacia arriba.

*1 سیم پین RCA (ضمیمه نیست)
*2 خروجی صدا AUDIO OUT می تواند بین SUB و REAR تغییر کند. برای جزئیات، دستور العمل های عملیاتی را ملاحظه نمایید.
*3 با سیم رو به بالا وارد کنید.

Connection diagram 3

❶ To a metal surface of the car
First connect the black ground (earth) lead, then connect the yellow, and red power supply leads.

❷ To the power antenna (aerial) control lead or power supply lead of antenna (aerial) booster amplifier

Notes
- *It is not necessary to connect this lead if there is no power antenna (aerial) or antenna (aerial) booster, or with a manually-operated telescopic antenna (aerial).*
- *When your car has a built-in FM/AM antenna (aerial) in the rear/side glass, see "Notes on the control and power supply leads."*

❸ To AMP REMOTE IN of an optional power amplifier
This connection is only for amplifiers. Connecting any other system may damage the unit.

❹ To the +12 V power terminal which is energized in the accessory position of the ignition key switch

Notes
- *If there is no accessory position, connect to the +12 V power (battery) terminal which is energized at all times. Be sure to connect the black ground (earth) lead to a metal surface of the car first.*
- *When your car has a built-in FM/AM antenna (aerial) in the rear/side glass, see "Notes on the control and power supply leads."*

❺ To the +12 V power terminal which is energized at all times
Be sure to connect the black ground (earth) lead to a metal surface of the car first.

Notes on the control and power supply leads
- *The power antenna (aerial) control lead (blue) supplies +12 V DC when you turn on the tuner.*
- *When your car has built-in FM/AM antenna (aerial) in the rear/side glass, connect the power antenna (aerial) control lead (blue) or the accessory power supply lead (red) to the power terminal of the existing antenna (aerial) booster. For details, consult your dealer.*
- *A power antenna (aerial) without a relay box cannot be used with this unit.*

Memory hold connection
When the yellow power supply lead is connected, power will always be supplied to the memory circuit even when the ignition switch is turned off.

Notes on speaker connection
- *Before connecting the speakers, turn the unit off.*
- *Use speakers with an impedance of 4 to 8 ohms, and with adequate power handling capacities to avoid its damage.*
- *Do not connect the speaker terminals to the car chassis, or connect the terminals of the right speakers with those of the left speaker.*
- *Do not connect the ground (earth) lead of this unit to the negative (–) terminal of the speaker.*
- *Do not attempt to connect the speakers in parallel.*
- *Connect only passive speakers. Connecting active speakers (with built-in amplifiers) to the speaker terminals may damage the unit.*
- *To avoid a malfunction, do not use the built-in speaker leads installed in your car if the unit shares a common negative (–) lead for the right and left speakers.*
- *Do not connect the unit's speaker leads to each other.*

Note on connection
If speaker and amplifier are not connected correctly, "FAILURE" appears in the display. In this case, make sure the speaker and amplifier are connected correctly.

Diagrama de conexión 3

❶ A una superficie metálica del automóvil
Conecte primero el cable de conexión a masa negro, y después los cables amarillo y rojo de fuente de alimentación.

❷ Al cable de control de la antena motorizada o al cable de fuente de alimentación del amplificador de señal de la antena

Notas
- *Si no se dispone de antena motorizada ni de amplificador de antena, o se utiliza una antena telescópica accionada manualmente, no será necesario conectar este cable.*
- *Si el automóvil incorpora una antena de FM/AM en el cristal trasero o lateral, consulte "Notas sobre los cables de control y de fuente de alimentación".*

❸ A AMP REMOTE IN de un amplificador de potencia opcional
Esta conexión es sólo para amplificadores. La conexión de cualquier otro sistema puede dañar la unidad.

❹ Al terminal de alimentación de +12 V que recibe energía en la posición de accesorio del interruptor de encendido

Notas
- *Si no hay posición de accesorio, conéctelo al terminal de alimentación (batería) de +12 V que recibe energía sin interrupción.*
  Asegúrese de conectar primero el cable de conexión a masa negro a una superficie metálica del automóvil.
- *Si el automóvil incorpora una antena de FM/AM en el cristal trasero o lateral, consulte "Notas sobre los cables de control y de fuente de alimentación".*

❺ Al terminal de alimentación de +12 V que recibe energía sin interrupción
Asegúrese de conectar primero el cable de conexión a masa negro a una superficie metálica del automóvil.

Notas sobre los cables de control y de fuente de alimentación
- *El cable de control de la antena motorizada (azul) suministrará cc de +12 V cuando conecte la alimentación del sintonizador.*
- *Si el automóvil dispone de una antena de FM/AM incorporada en el cristal trasero o lateral, conecte el cable de control de antena motorizada (azul) o el cable de fuente de alimentación auxiliar (rojo) al terminal de alimentación del amplificador de antena existente. Para obtener más información, consulte a su distribuidor.*
- *Con esta unidad no es posible utilizar una antena motorizada sin caja de relé.*

Conexión para protección de la memoria
Si conecta el cable de fuente de alimentación amarillo, el circuito de la memoria recibirá siempre alimentación, aunque apague el interruptor de encendido.

Notas sobre la conexión de los altavoces
- *Antes de conectar los altavoces, desconecte la alimentación de la unidad.*
- *Utilice altavoces con una impedancia de 4 a 8 Ω con la capacidad de potencia adecuada para evitar que se dañen.*
- *No conecte los terminales de altavoz al chasis del automóvil, ni conecte los terminales del altavoz derecho con los del izquierdo.*
- *No conecte el cable de conexión a masa de esta unidad al terminal negativo (–) del altavoz.*
- *No intente conectar los altavoces en paralelo.*
- *Conecte solamente altavoces pasivos. Si conecta altavoces activos (con amplificadores incorporados) a los terminales de altavoz, puede dañar la unidad.*
- *Para evitar fallas de funcionamiento, no utilice los cables de altavoz incorporados instalados en el automóvil si la unidad comparte un cable negativo común (–) para los altavoces derecho e izquierdo.*
- *No conecte los cables de altavoz de la unidad entre sí.*

Nota sobre la conexión
Si el altavoz y el amplificador no están conectados correctamente, aparecerá "FAILURE" en la pantalla. Si es así, compruebe la conexión de ambos dispositivos.

نمودار اتصال 3

❶ به یک سطح فلزی اتومبیل
ابتدا سیم سیاه زمین را وصل کنید، سپس سیم های منبع زرد و قرمز را وصل کنید.

❷ به سیم کنترل آنتن هوایی برقی یا سیم منبع برق آمپلی فایر تقویت کننده آنتن هوایی

نکات
- *در صورتی که آنتن هوایی برقی یا تقویت کننده آنتن هوایی وجود ندارد، وصل کردن این سیم ضروری نیست.*
- *هنگامی که اتومبیل شما دارای یک آنتن هوایی FM/AM در شیشه عقب/کناری می باشد، "نکات در مورد سیم های کنترل و منبع برق" را ملاحظه نمایید.*

❸ به AMP REMOTE IN یک آمپلی فایر برقی اختیاری
این اتصال تنها برای آمپلی فایرها است. اتصال هر سیستم دیگری می تواند باعث صدمه به دستگاه شود.

❹ به ترمینال برق 12+ ولت که در موقعیت جانبی کلید احتراق نیرو می گیرد

نکات
- *اگر هیچ موقعیت جانبی وجود ندارد، به ترمینال برق (باتری) 12+ ولت که همواره نیرو می گیرد وصل کنید. حتما ابتدا سیم سیاه زمین را به سطح فلزی اتومبیل وصل کنید.*
- *هنگامی که اتومبیل شما دارای یک آنتن هوایی FM/AM در شیشه عقب/کناری می باشد، "نکات در مورد سیم های کنترل و منبع برق" را ملاحظه نمایید.*

❺ به ترمینال برق 12+ ولت که همواره نیرو می گیرد
حتما ابتدا سیم سیاه زمین را به سطح فلزی اتومبیل وصل کنید.

نکات در مورد سیم های کنترل و منبع برق
- *هنگامی که شما موج یاب را روشن می کنید سیم کنترل آنتن هوایی برقی (آبی) برق مستقیم 12+ ولت را تامین می کند.*
- *هنگامی که اتومبیل شما دارای یک آنتن هوایی FM/AM در شیشه عقب/کناری می باشد، سیم کنترل آنتن هوایی برقی (آبی) یا سیم منبع برق جانبی (قرمز) را به ترمینال برق تقویت کننده آنتن هوایی موجود وصل کنید. برای جزئیات، با فروشنده خود مشورت نمایید.*
- *یک آنتن هوایی بدون یک ایستگاه تقویت نمی تواند با این دستگاه مورد استفاده قرار گیرد.*

اتصال حفظ حافظه
هنگامی که سیم منبع برق زرد وصل شده است، برق همواره به مدار حافظه داده می شود حتی هنگامی که کلید احتراق خاموش باشد.

نکات در مورد اتصال بلندگو
- *پیش از وصل کردن بلندگوها، دستگاه را خاموش کنید.*
- *از بلندگوها با امپدانس 4 تا 8 اهم، و با ظرفیت بالای برق استفاده کنید تا از صدمه به آن جلوگیری شود.*
- *ترمینال های بلندگو را به شاسی اتومبیل وصل نکنید، یا ترمینال های بلندگوهای راست را به ترمینال های بلندگوهای چپ وصل نکنید.*
- *سیم زمین این دستگاه را به ترمینال منفی (–) بلندگو وصل نکنید.*
- *سعی نکنید بلندگوها را بطور موازی وصل کنید.*
- *تنها بلندگوهای غیر فعال را وصل کنید. وصل کردن بلندگوهای فعال (با تقویت کننده های داخلی) به ترمینال های بلندگو ممکن است به دستگاه صدمه وارد کند.*
- *برای اجتناب از یک سوء عملکرد، از سیم های بلندگوی داخلی نصب شده در اتومبیل خود در صورتی که دستگاه دارای یک سیم منفی (–) مشترک برای بلندگوهای راست و چپ می باشد استفاده نکنید.*
- *سیم های بلندگوی دستگاه را به یکدیگر وصل نکنید.*

نکته در مورد اتصال
اگر بلندگو و آمپلی فایر بطور صحیح وصل نشده باشند، "FAILURE" در صفحه نمایش ظاهر می شود. در چنین حالتی، مطمئن شوید که بلندگو و آمپلی فایر بطور صحیح نصب شده اند.

http://www.xiaoyu163.com

http://www.xiaoyu163.com

- **CONNECTION**
- **CDX-GT480US: Argentina model**

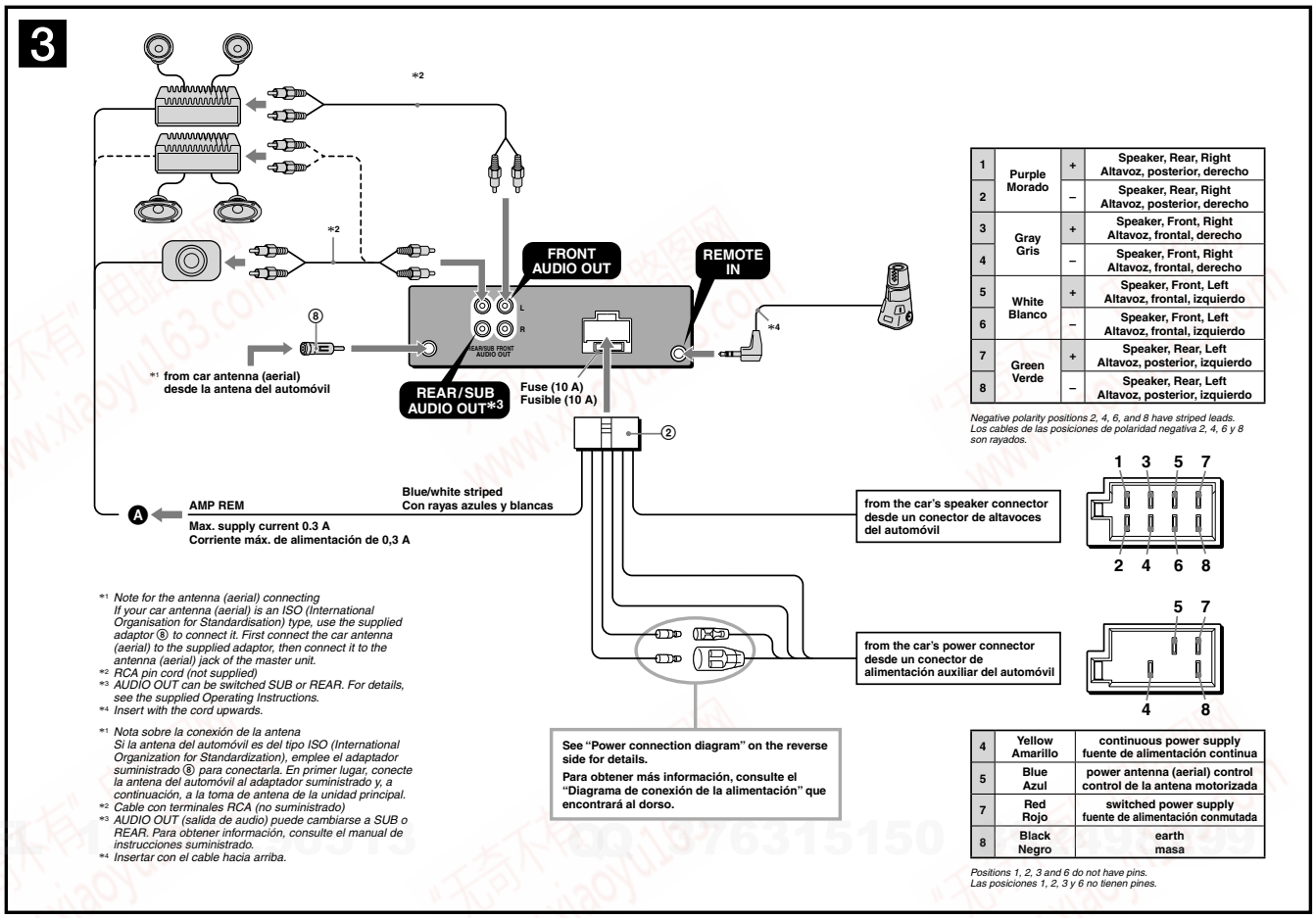

1	Purple Morado	+	Speaker, Rear, Right Altavoz, posterior, derecho
2		–	Speaker, Rear, Right Altavoz, posterior, derecho
3	Gray Gris	+	Speaker, Front, Right Altavoz, frontal, derecho
4		–	Speaker, Front, Right Altavoz, frontal, derecho
5	White Blanco	+	Speaker, Front, Left Altavoz, frontal, izquierdo
6		–	Speaker, Front, Left Altavoz, frontal, izquierdo
7	Green Verde	+	Speaker, Rear, Left Altavoz, posterior, izquierdo
8		–	Speaker, Rear, Left Altavoz, posterior, izquierdo

Negative polarity positions 2, 4, 6, and 8 have striped leads.
Los cables de las posiciones de polaridad negativa 2, 4, 6 y 8 son rayados.

4	Yellow Amarillo	continuous power supply fuente de alimentación continua
5	Blue Azul	power antenna (aerial) control control de la antena motorizada
7	Red Rojo	switched power supply fuente de alimentación conmutada
8	Black Negro	earth masa

Positions 1, 2, 3 and 6 do not have pins.
Las posiciones 1, 2, 3 y 6 no tienen pines.

Connection diagram 3

Ⓐ To AMP REMOTE IN of an optional power amplifier
This connection is only for amplifiers. Connecting any other system may damage the unit.

Warning

If you have a power antenna (aerial) without a relay box, connecting this unit with the supplied power connecting lead ② may damage the antenna (aerial).

Notes on the control and power supply leads
- *The power antenna (aerial) control lead (blue) supplies +12 V DC when you turn on the tuner.*
- *When your car has built-in FM/AM antenna (aerial) in the rear/side glass, connect the power antenna (aerial) control lead (blue) or the accessory power supply lead (red) to the power terminal of the existing antenna (aerial) booster. For details, consult your dealer.*
- *A power antenna (aerial) without a relay box cannot be used with this unit.*

Memory hold connection
When the yellow power supply lead is connected, power will always be supplied to the memory circuit even when the ignition switch is turned off.

Notes on speaker connection
- *Before connecting the speakers, turn the unit off.*
- *Use speakers with an impedance of 4 to 8 ohms, and with adequate power handling capacities to avoid its damage.*
- *Do not connect the speaker terminals to the car chassis, or connect the terminals of the right speakers with those of the left speaker.*
- *Do not connect the ground (earth) lead of this unit to the negative (–) terminal of the speaker.*
- *Do not attempt to connect the speakers in parallel.*
- *Connect only passive speakers. Connecting active speakers (with built-in amplifiers) to the speaker terminals may damage the unit.*
- *To avoid a malfunction, do not use the built-in speaker leads installed in your car if the unit shares a common negative (–) lead for the right and left speakers.*
- *Do not connect the unit's speaker leads to each other.*

Note on connection
If speaker and amplifier are not connected correctly, "FAILURE" appears in the display. In this case, make sure the speaker and amplifier are connected correctly.

Diagrama de conexión 3

Ⓐ A AMP REMOTE IN de un amplificador de potencia opcional
Esta conexión es sólo para amplificadores. La conexión de cualquier otro sistema puede dañar la unidad.

Advertencia

Si la antena motorizada no dispone de caja de relé, es posible que la conexión de esta unidad mediante el cable de alimentación suministrado ② provoque daños en la antena.

Notas sobre los cables de control y de fuente de alimentación
- *El cable de control de la antena motorizada (azul) suministrará cc de +12 V cuando conecte la alimentación del sintonizador.*
- *Si el automóvil dispone de una antena de FM/AM incorporada en el cristal trasero o lateral, conecte el cable de control de antena motorizada (azul) o el cable de fuente de alimentación auxiliar (rojo) al terminal de alimentación del amplificador de antena existente. Para obtener más información, consulte a su distribuidor.*
- *Con esta unidad no es posible utilizar una antena motorizada sin caja de relé.*

Conexión para protección de la memoria
Si conecta el cable de fuente de alimentación amarillo, el circuito de la memoria recibirá siempre alimentación, aunque apague el interruptor de encendido.

Notas sobre la conexión de los altavoces
- *Antes de conectar los altavoces, desconecte la alimentación de la unidad.*
- *Utilice altavoces con una impedancia de 4 a 8 ? con la capacidad de potencia adecuada para evitar que se dañen.*
- *No conecte los terminales de altavoz al chasis del automóvil, ni conecte los terminales del altavoz derecho con los del izquierdo.*
- *No conecte el cable de conexión a masa de esta unidad al terminal negativo (–) del altavoz.*
- *No intente conectar los altavoces en paralelo.*
- *Conecte solamente altavoces pasivos. Si conecta altavoces activos (con amplificadores incorporados) a los terminales de altavoz, puede dañar la unidad.*
- *Para evitar fallas de funcionamiento, no utilice los cables de altavoz incorporados instalados en el automóvil si la unidad comparte un cable negativo común (–) para los altavoces derecho e izquierdo.*
- *No conecte los cables de altavoz de la unidad entre sí.*

Nota sobre la conexión
Si el altavoz y el amplificador no están conectados correctamente, aparecerá "FAILURE" en la pantalla. Si es así, compruebe la conexión de ambos dispositivos.

http://www.xiaoyu163.com

http://www.xiaoyu163.com

SECTION 3
DISASSEMBLY

- This set can be disassembled in the order shown below.

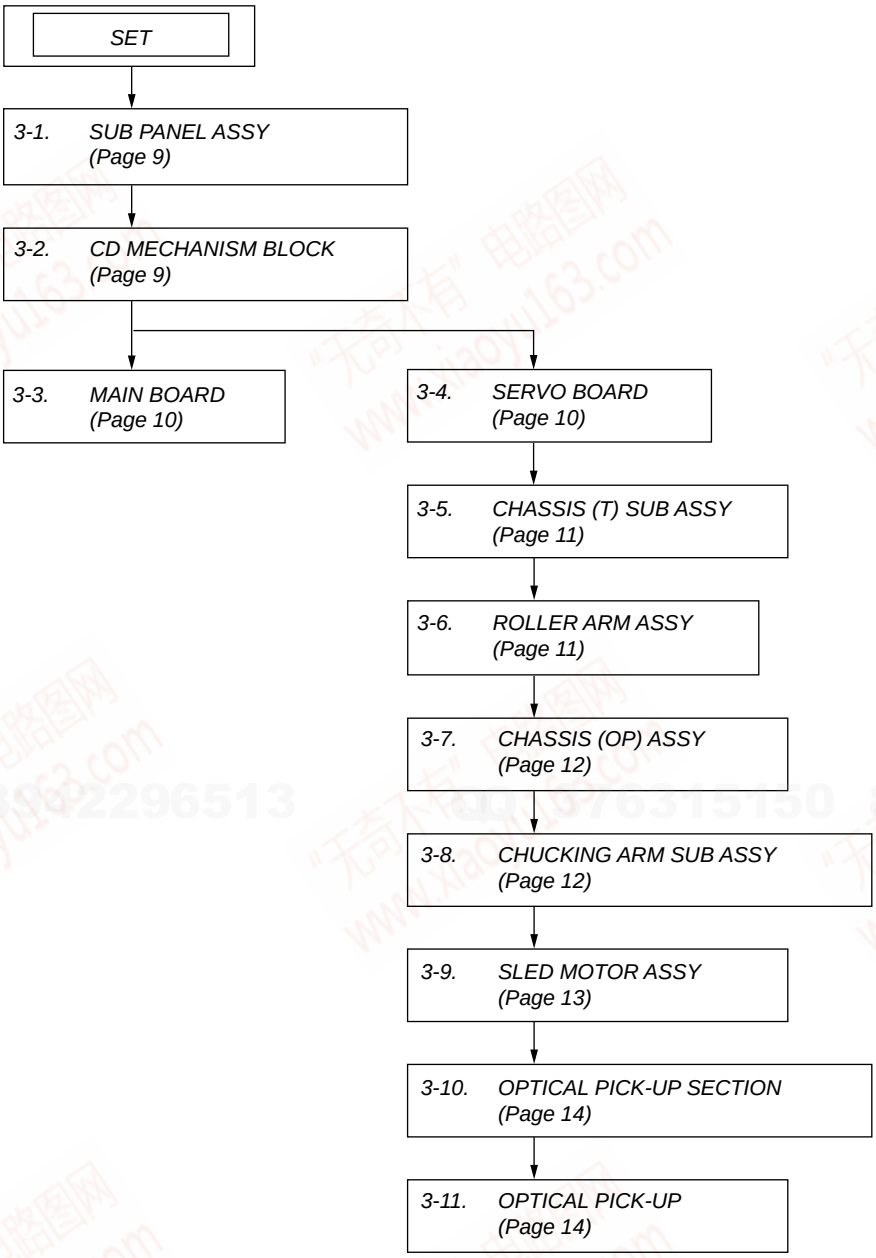

http://www.xiaoyu163.com

http://www.xiaoyu163.com

Note: Follow the disassembly procedure in the numerical order shown below.

3-1. SUB PANEL ASSY

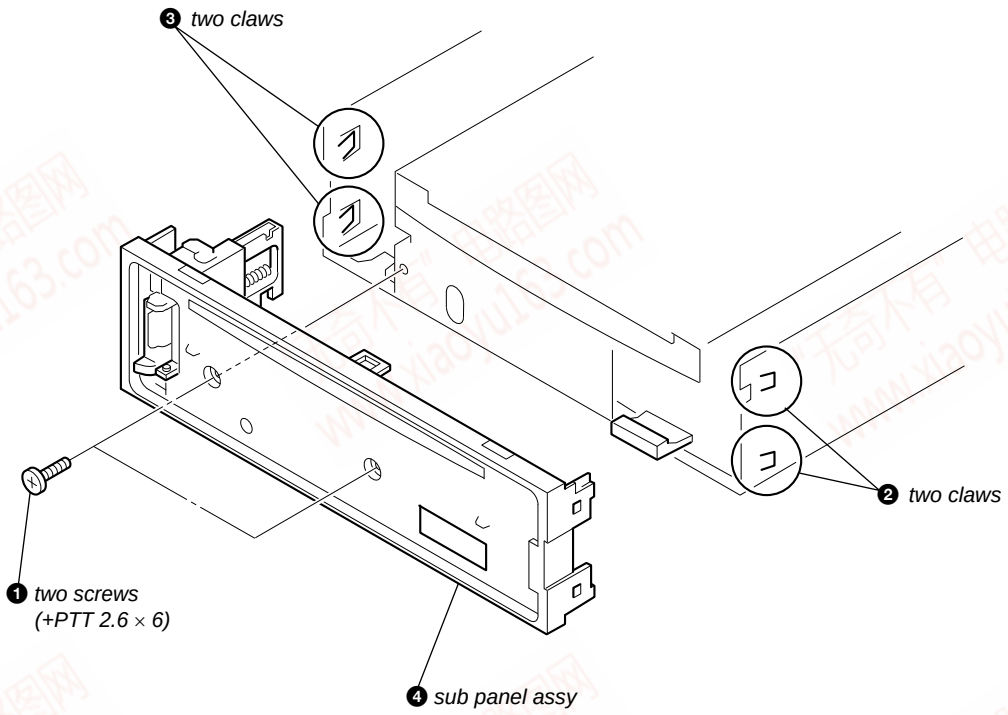

3-2. CD MECHANISM BLOCK

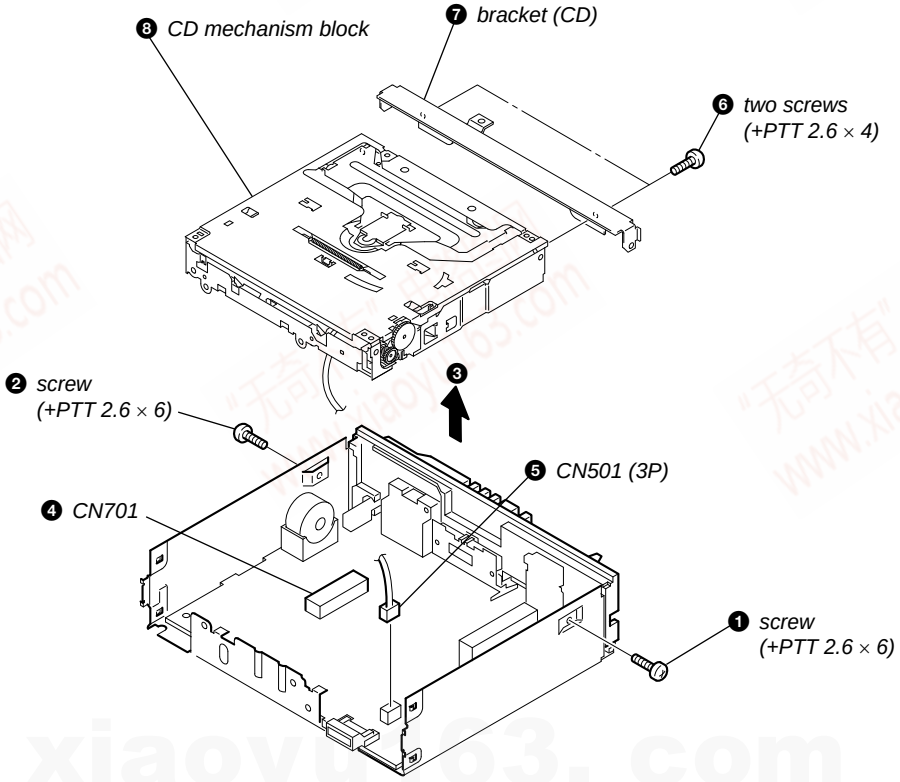

http://www.xiaoyu163.com

http://www.xiaoyu163.com

3-3. MAIN BOARD

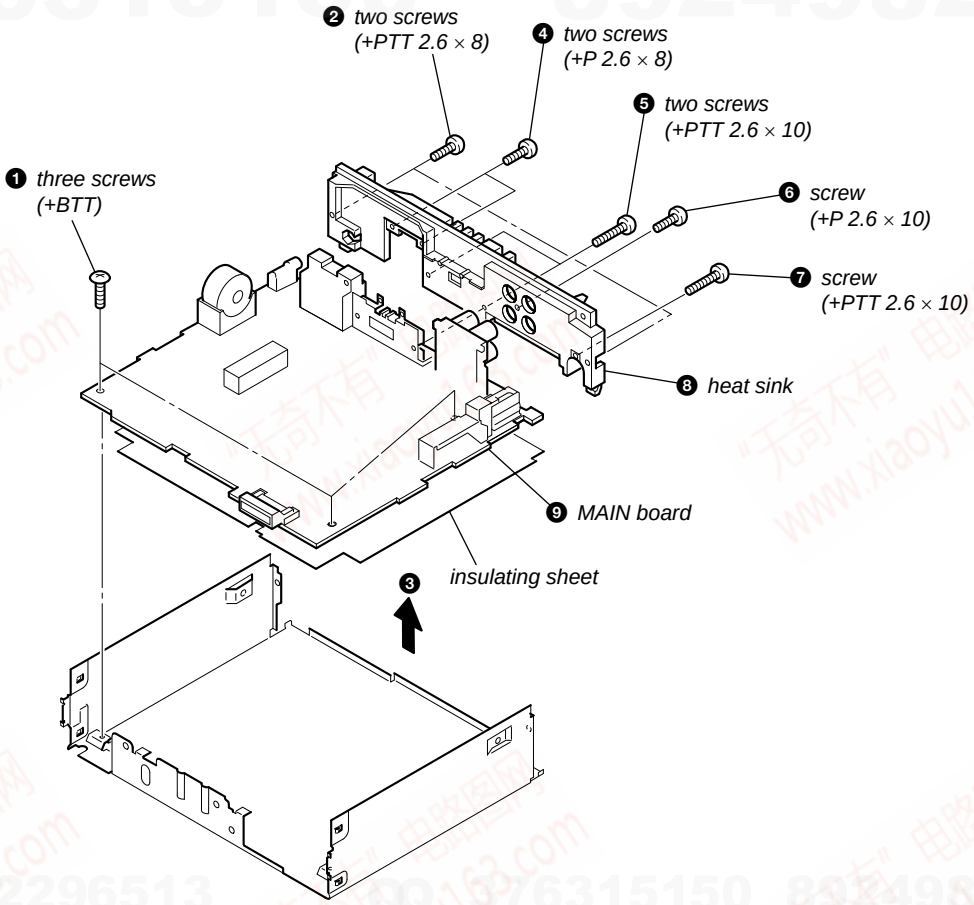

3-4. SERVO BOARD

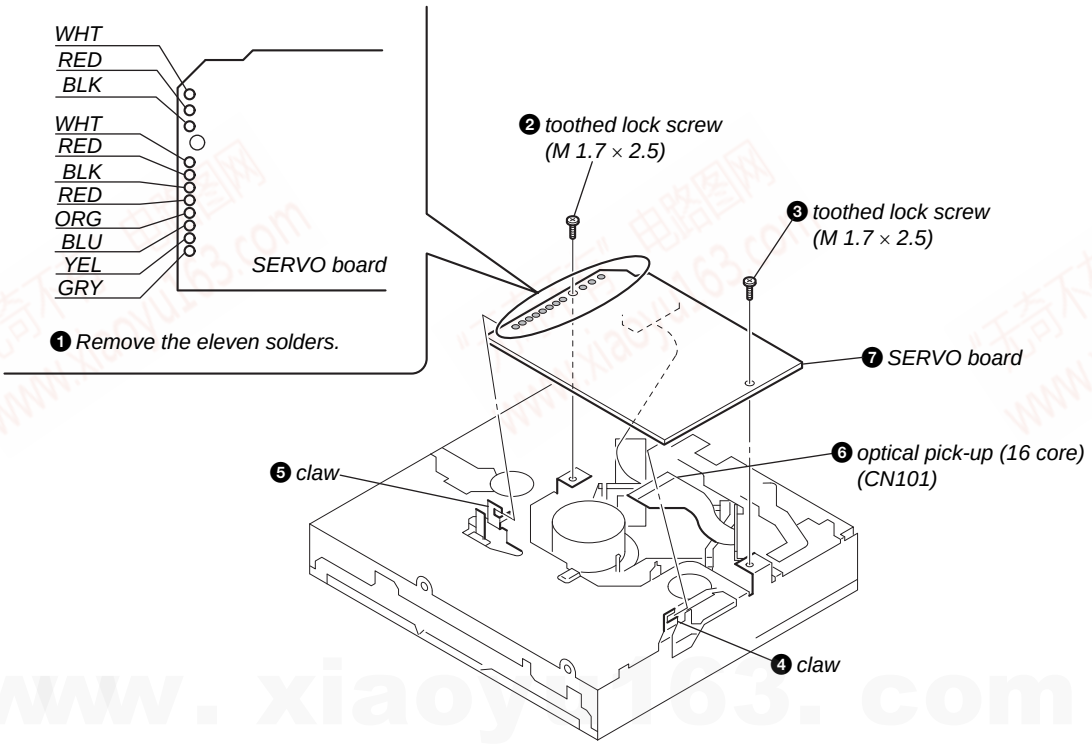

http://www.xiaoyu163.com

http://www.xiaoyu163.com

3-5. CHASSIS (T) SUB ASSY

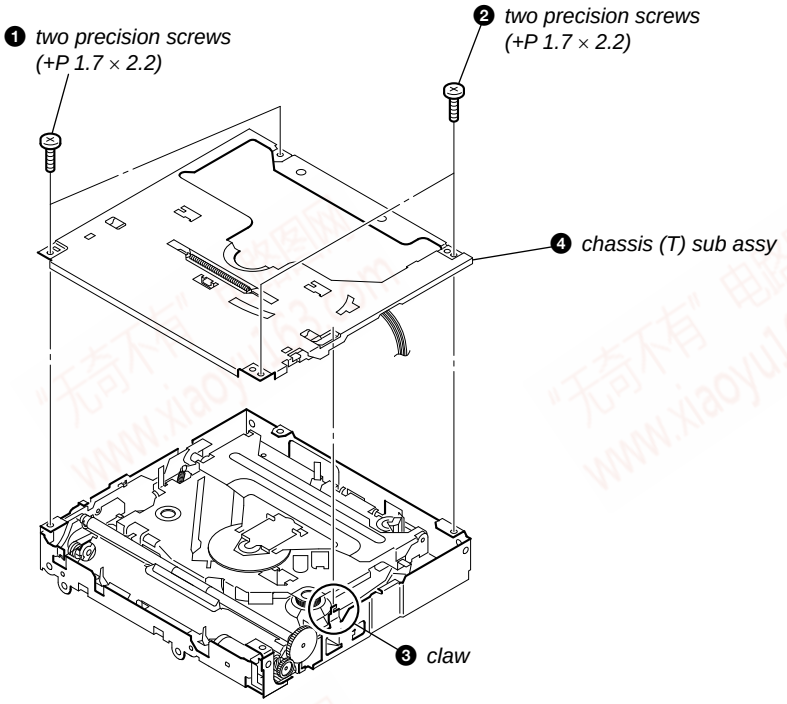

3-6. ROLLER ARM ASSY

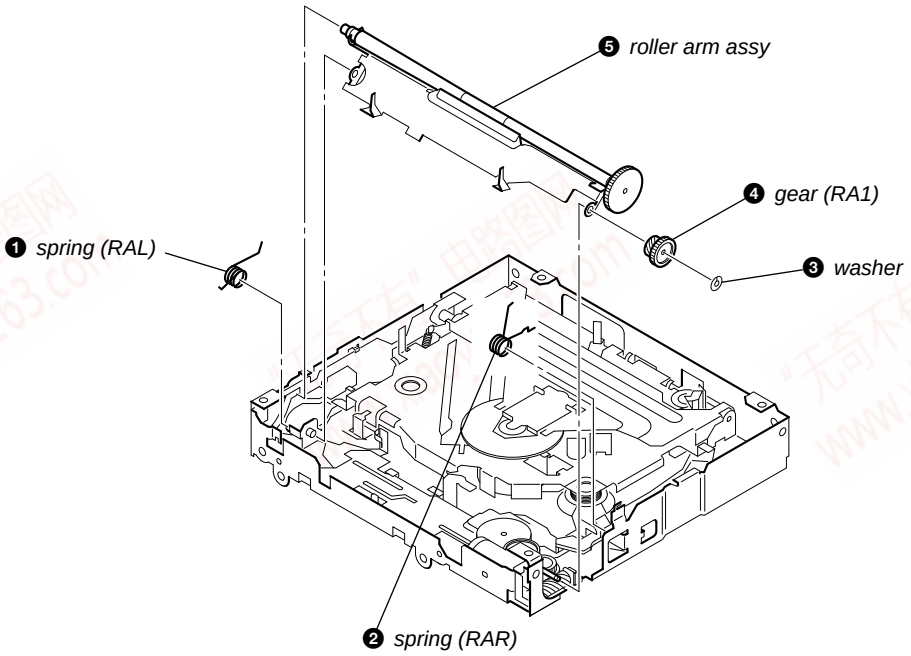

http://www.xiaoyu163.com

http://www.xiaoyu163.com

3-7. CHASSIS (OP) ASSY

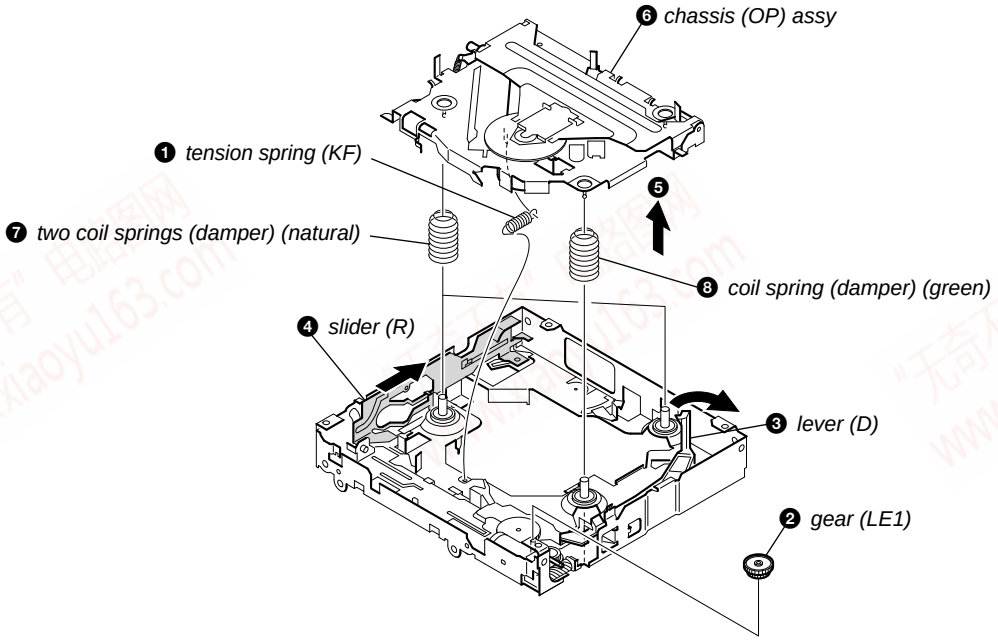

3-8. CHUCKING ARM SUB ASSY

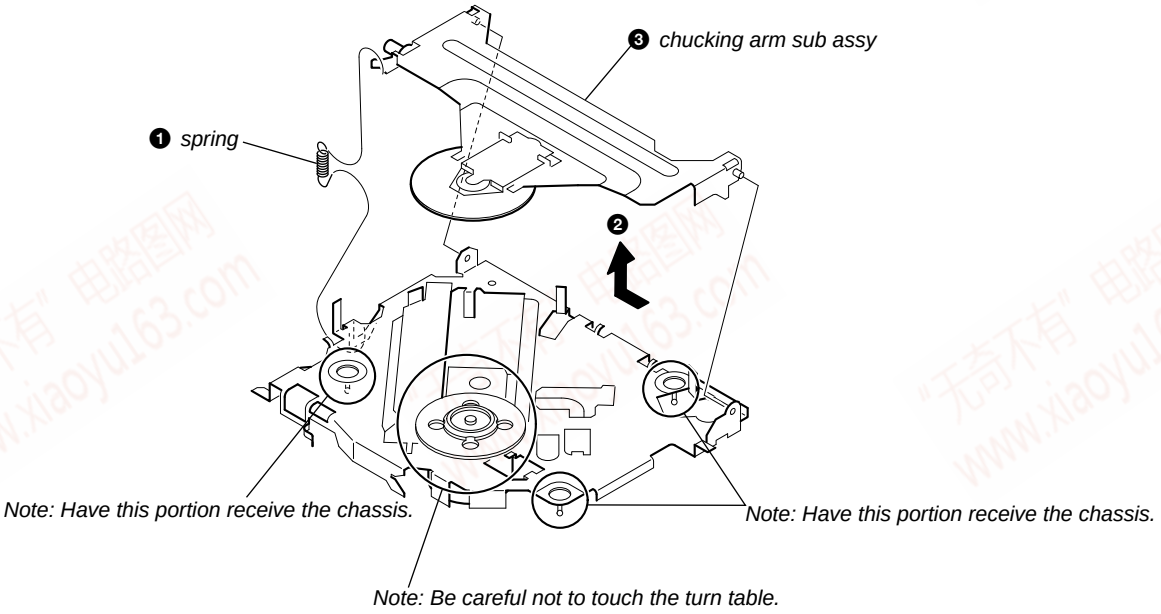

http://www.xiaoyu163.com

http://www.xiaoyu163.com

3-9. SLED MOTOR ASSY

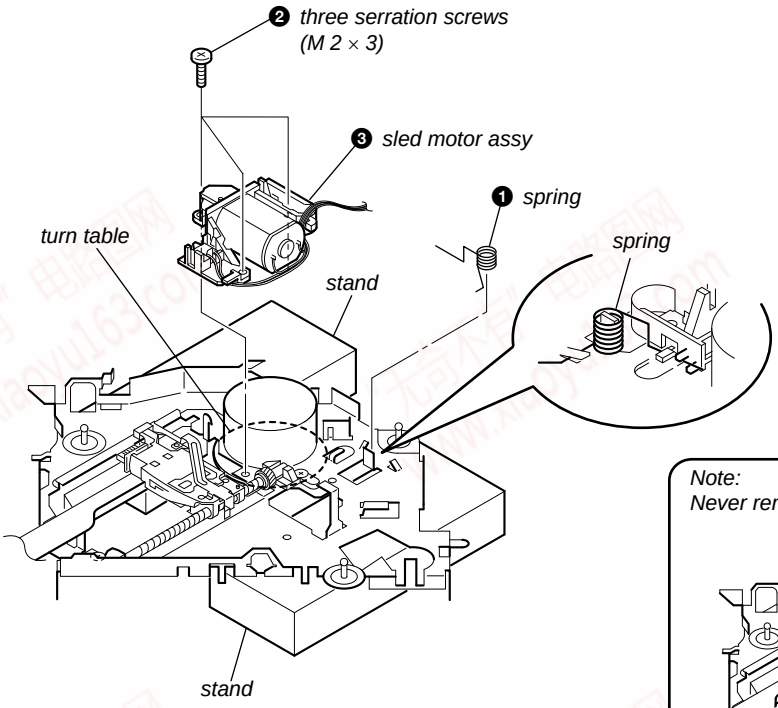

Note: Place the stand with care not to touch the turn table.

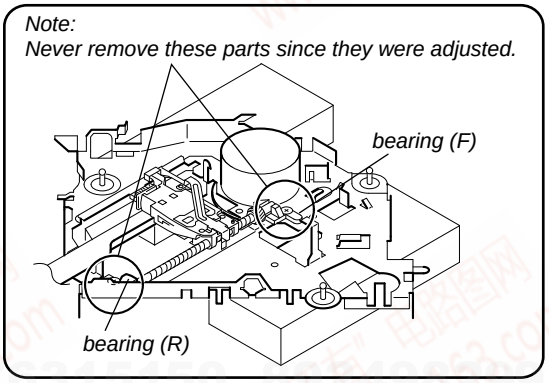

Note for Assembly

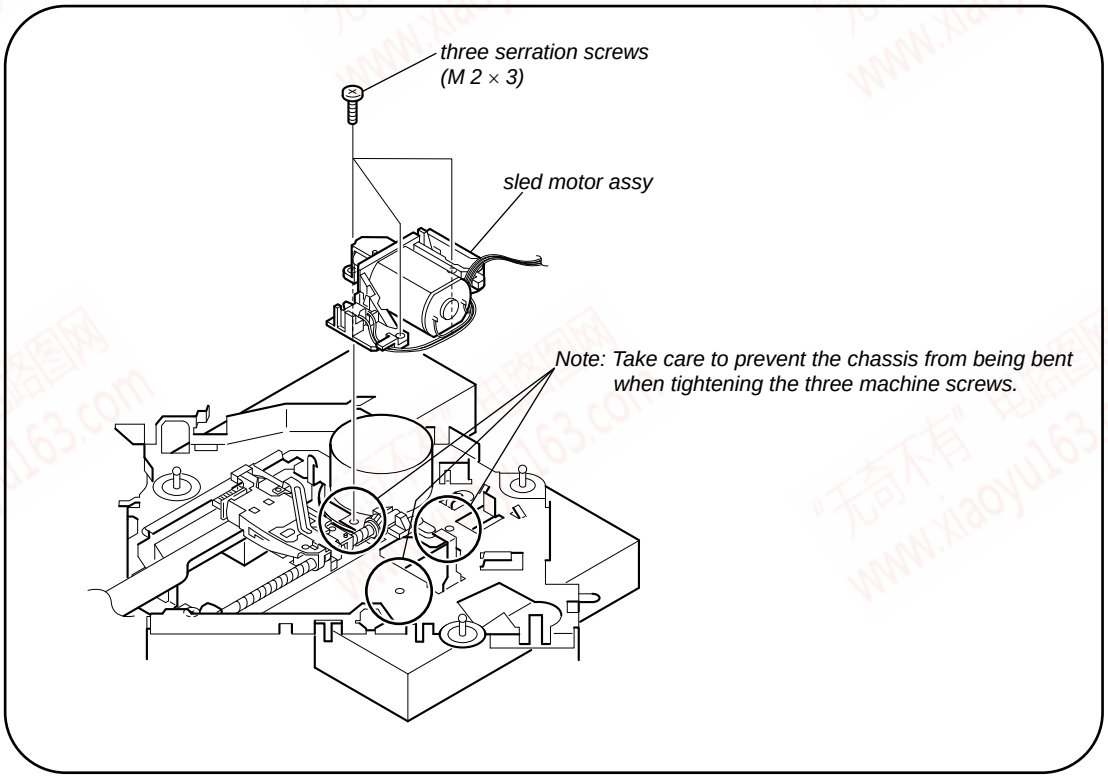

http://www.xiaoyu163.com

http://www.xiaoyu163.com

3-10. OPTICAL PICK-UP SECTION

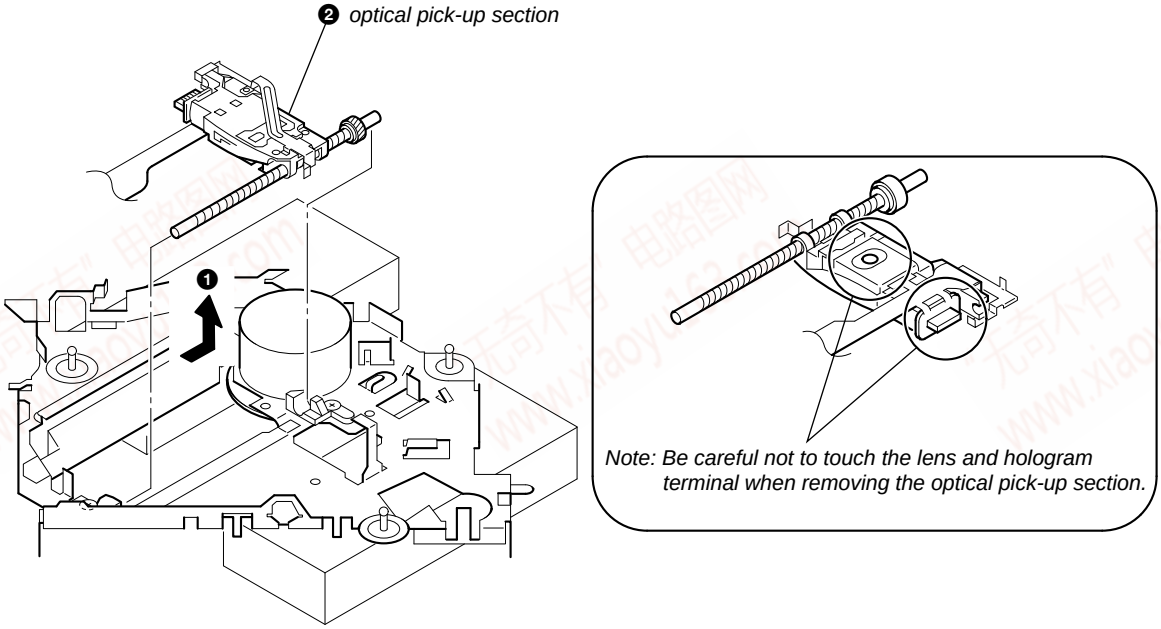

3-11. OPTICAL PICK-UP

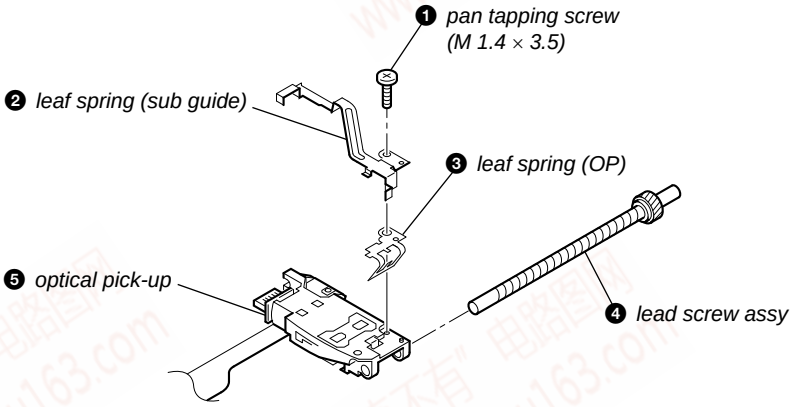

Notes for Assembly

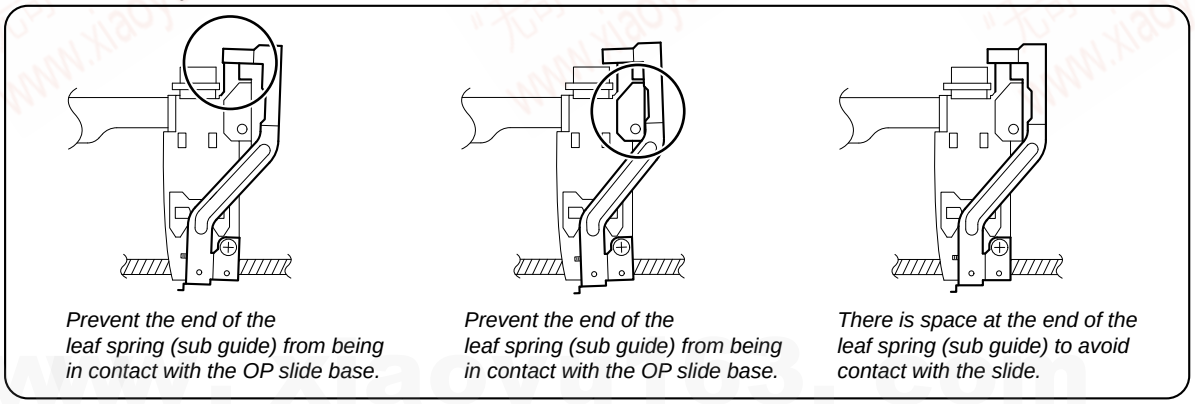

http://www.xiaoyu163.com

http://www.xiaoyu163.com

SECTION 4
DIAGRAMS

4-1. BLOCK DIAGRAM – MAIN Section –

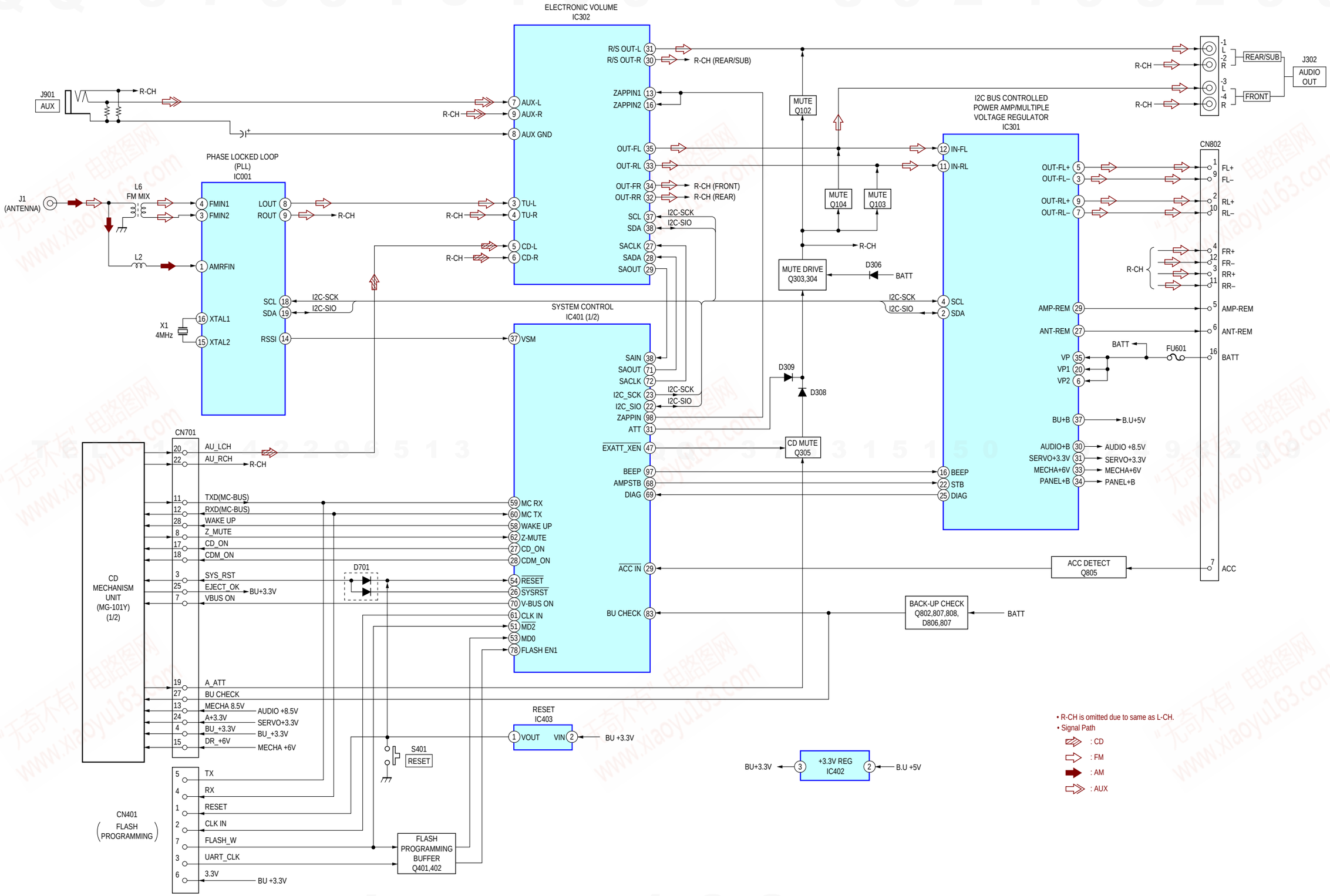

http://www.xiaoyu163.com

http://www.xiaoyu163.com

4-2. BLOCK DIAGRAM – DISPLAY Section –

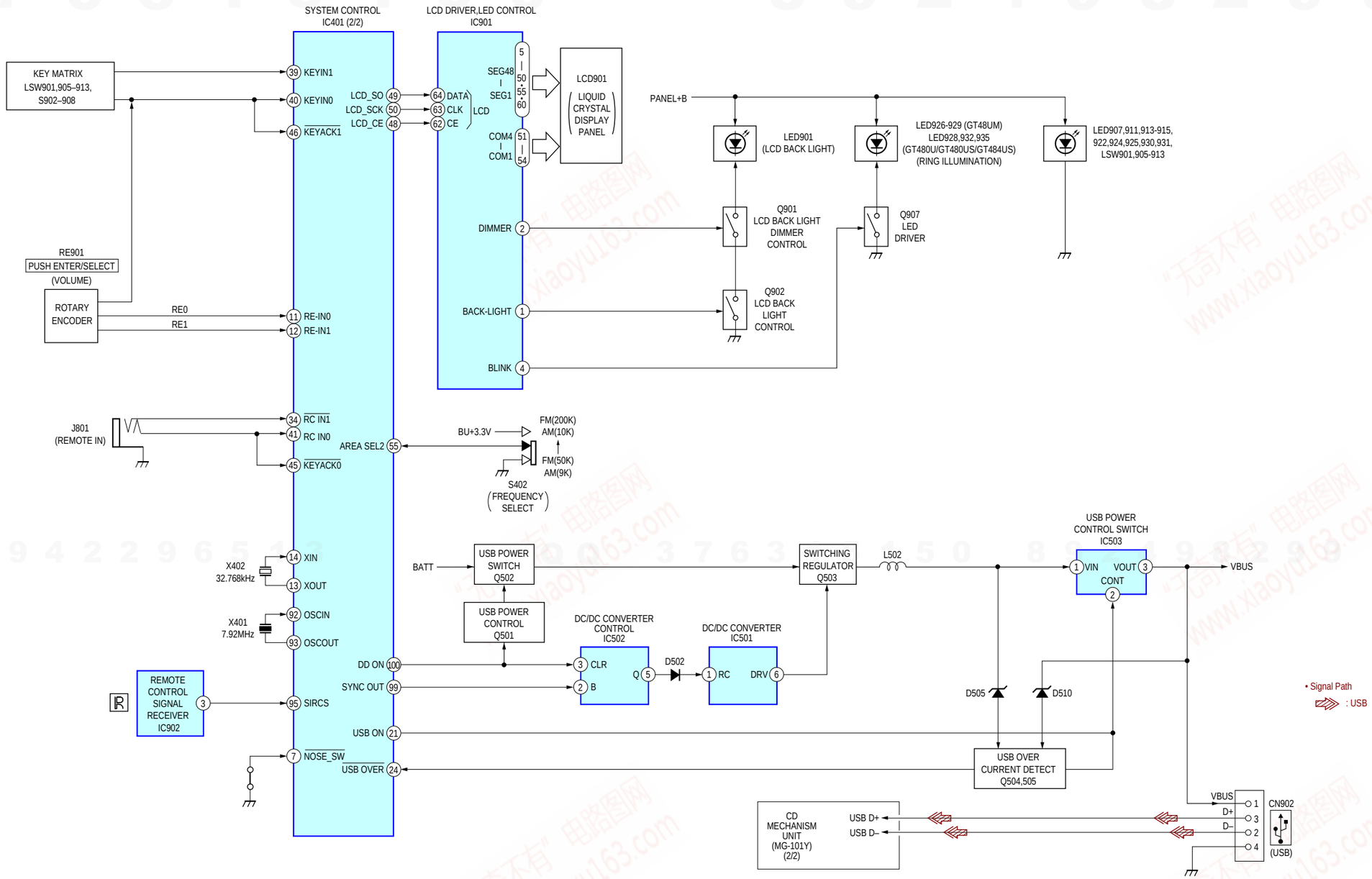

http://www.xiaoyu163.com

http://www.xiaoyu163.com

THIS NOTE IS COMMON FOR PRINTED WIRING BOARDS AND SCHEMATIC DIAGRAMS.
(In addition to this, the necessary note is printed in each block.)

For Printed Wiring Boards:

Note:

- ○——— : Parts extracted from the component side.
- ——— : parts extracted from the conductor side.
- ○ : Through hole.
- : Pattern from the side which enables seeing.
  (The other layers' patterns are not indicated.)

Caution:

Pattern face side: (SIDE B)	Parts on the pattern face side seen from the pattern face are indicated.
Parts face side: (SIDE A)	Parts on the parts face side seen from the parts face are indicated.

- Abbreviation
  MX : Mexican model
  AR : Argentina model

For Schematic Diagrams:

Note:

- All capacitors are in μF unless otherwise noted. (p: pF) 50 WV or less are not indicated except for electrolytics and tantalums.
- All resistors are in Ω and 1/4 W or less unless otherwise specified.
- △ : internal component.
- ▭ : panel designation.

Note: The components identified by mark ⚠ or dotted line with mark ⚠ are critical for safety.
Replace only with part number specified.

- ▬▬ : B+ Line.
- ▬ ▬ ▬ : B– Line.
- Voltages and waveforms are dc with respect to ground under no-signal (detuned) conditions.
  no mark : FM
  ( ) : AM
  < > : CD PLAY
  ∗ : Impossible to measure
- Voltages are taken with a VOM (Input impedance 10 MΩ). Voltage variations may be noted due to normal production tolerances.
- Waveforms are taken with a oscilloscope. Voltage variations may be noted due to normal production tolerances.
- Circled numbers refer to waveforms.
- Signal path.
  ⇨ : CD
  ⇨ : FM
  ➡ : AM
  ⇨ : AUX
  ⇨ : USB
- Abbreviation
  MX : Mexican model
  AR : Argentina model

- **Waveforms**

– MAIN Board –

① IC001 ⑯ (XTAL1)

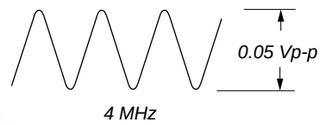

0.05 V/DIV, 50 nsec/DIV

② IC401 ⑬ (X_OUT)

0.5 V/DIV, 20 μsec/DIV

③ IC401 ㉝ (OSC_OUT)

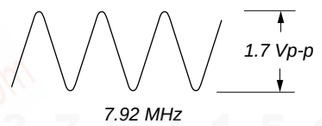

0.5 V/DIV, 50 nsec/DIV

www.xiaoyu163.com

http://www.xiaoyu163.com

http://www.xiaoyu163.com

4-3. PRINTED WIRING BOARD – MAIN Section – • : Uses unleaded solder.

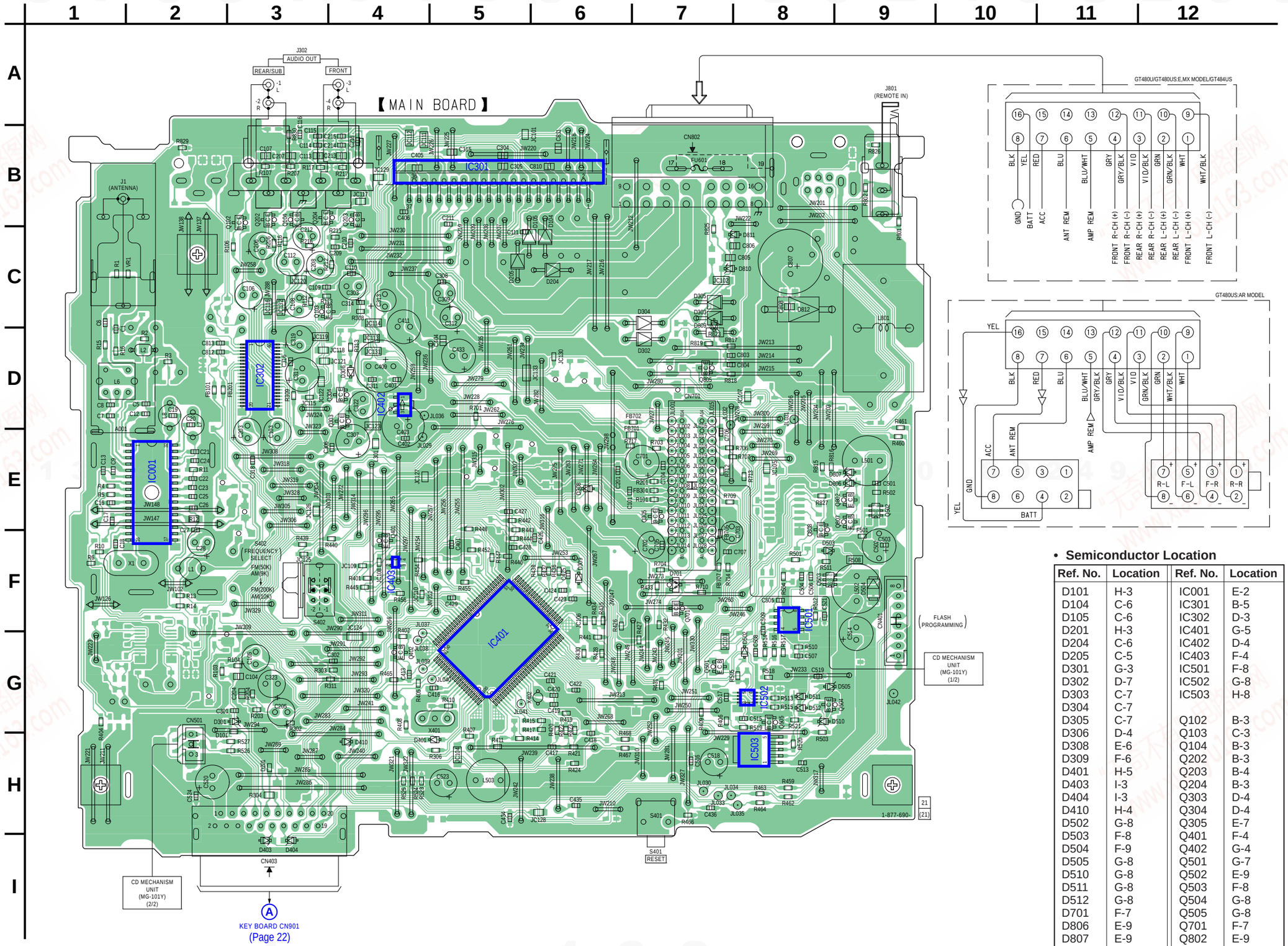

• **Semiconductor Location**

Ref. No.	Location	Ref. No.	Location
D101	H-3	IC001	E-2
D104	C-6	IC301	B-5
D105	C-6	IC302	D-3
D201	H-3	IC401	G-5
D204	C-6	IC402	D-4
D205	C-5	IC403	F-4
D301	G-3	IC501	F-8
D302	D-7	IC502	G-8
D303	C-7	IC503	H-8
D304	C-7		
D305	C-7	Q102	B-3
D306	D-4	Q103	C-3
D308	E-6	Q104	B-3
D309	F-6	Q202	B-3
D401	H-5	Q203	B-4
D403	I-3	Q204	B-3
D404	I-3	Q303	D-4
D410	H-4	Q304	D-4
D502	G-8	Q305	E-7
D503	F-8	Q401	F-4
D504	F-9	Q402	G-4
D505	G-8	Q501	G-7
D510	G-8	Q502	E-9
D511	G-8	Q503	F-8
D512	G-8	Q504	G-8
D701	F-7	Q505	G-8
D806	E-9	Q701	F-7
D807	E-9	Q802	E-9
D809	C-7	Q805	D-7
D810	C-8	Q807	E-9
D811	C-8	Q808	F-8
D812	C-8		
		VR1	C-2

http://www.xiaoyu163.com

http://www.xiaoyu163.com

4-4. SCHEMATIC DIAGRAM – MAIN Section (1/3) –

• See page 24 for IC Block Diagrams.

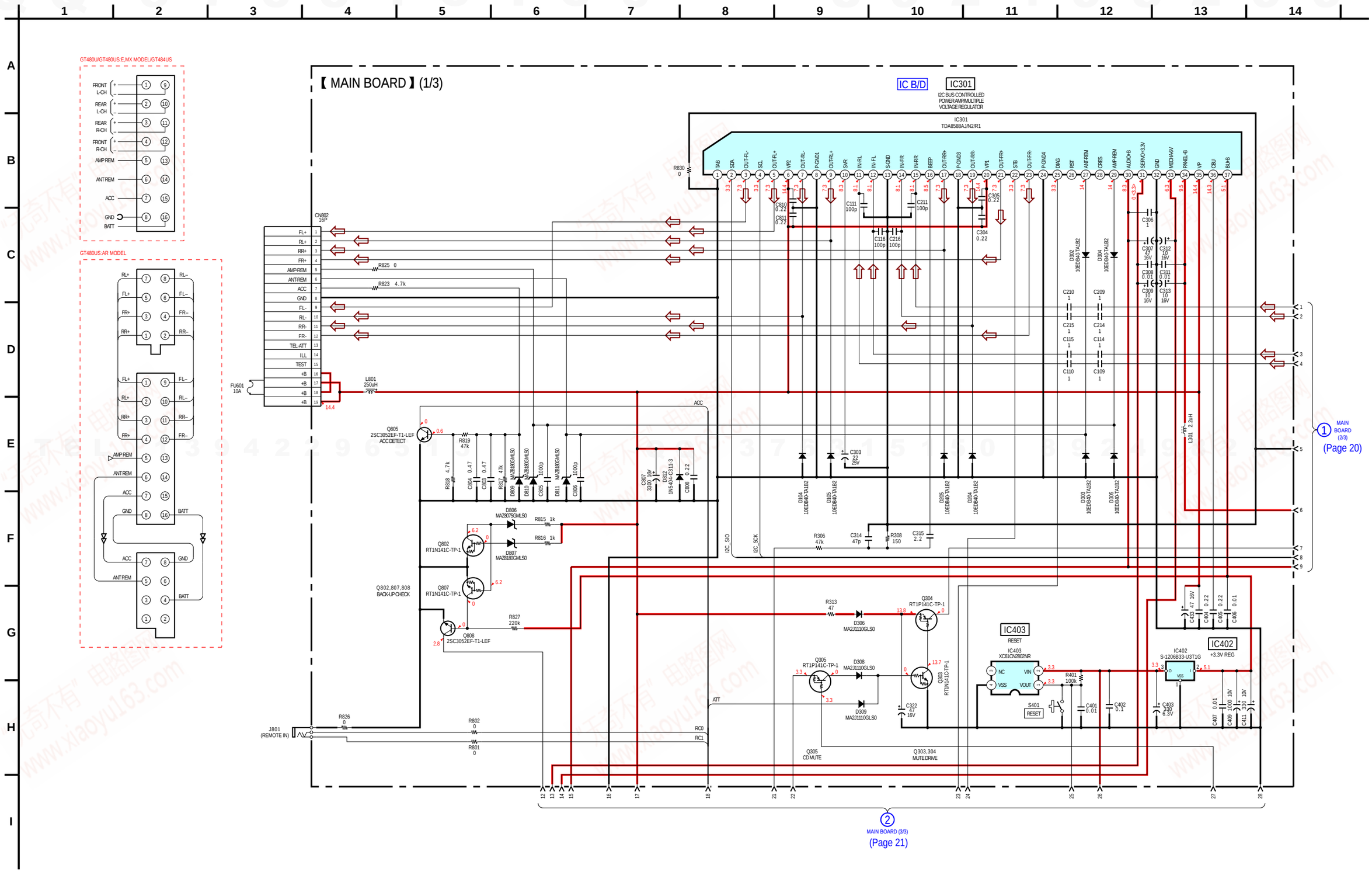

http://www.xiaoyu163.com

http://www.xiaoyu163.com

4-5. SCHEMATIC DIAGRAM – MAIN Section (2/3) –

• See page 17 for waveforms. • See page 24 for IC Block Diagrams.

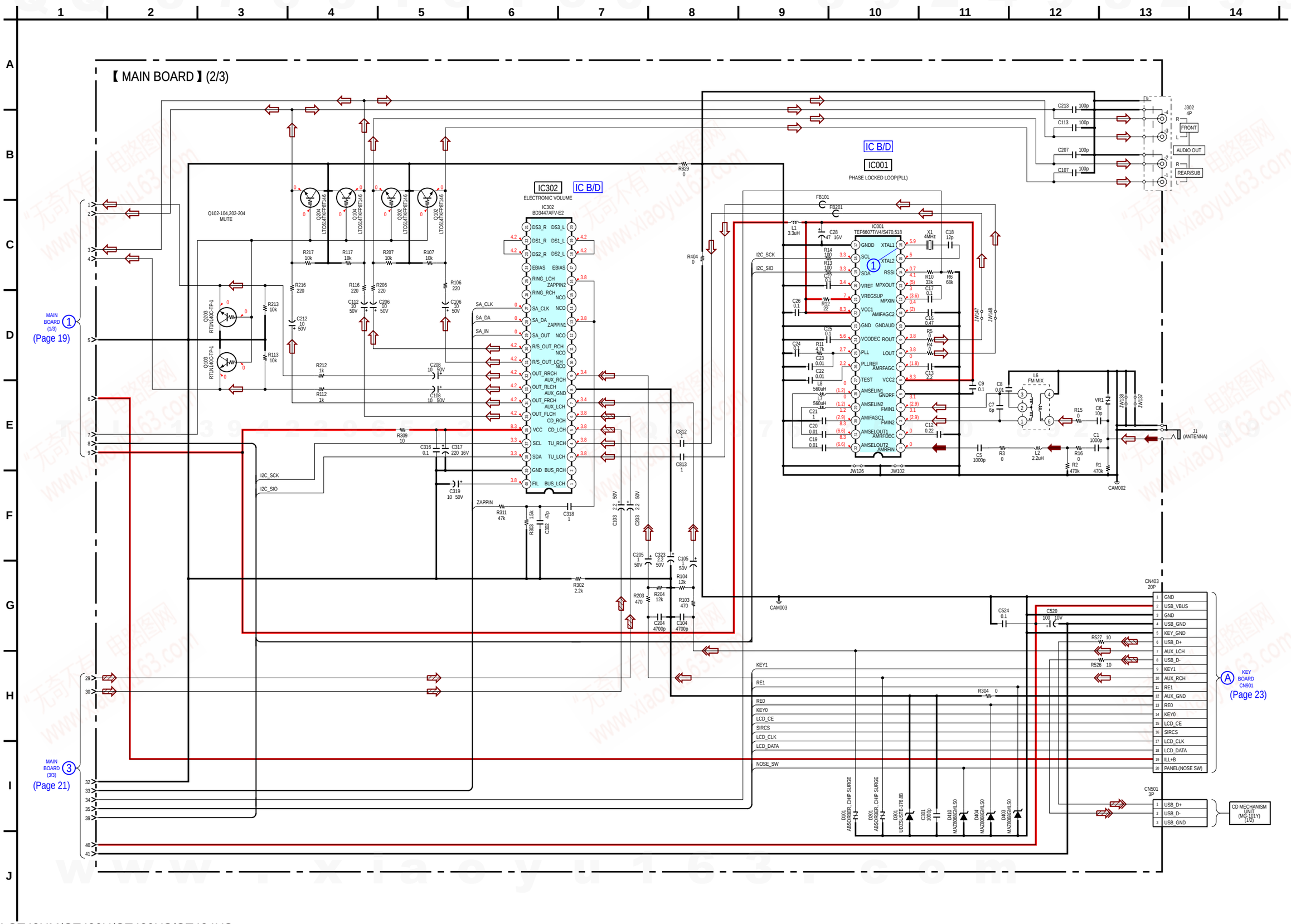

http://www.xiaoyu163.com

http://www.xiaoyu163.com

4-6. SCHEMATIC DIAGRAM – MAIN Section (3/3) –

• See page 17 for Waveforms. • See page 26 for IC Block Diagrams. • See page 27 for IC Pin Function Description.

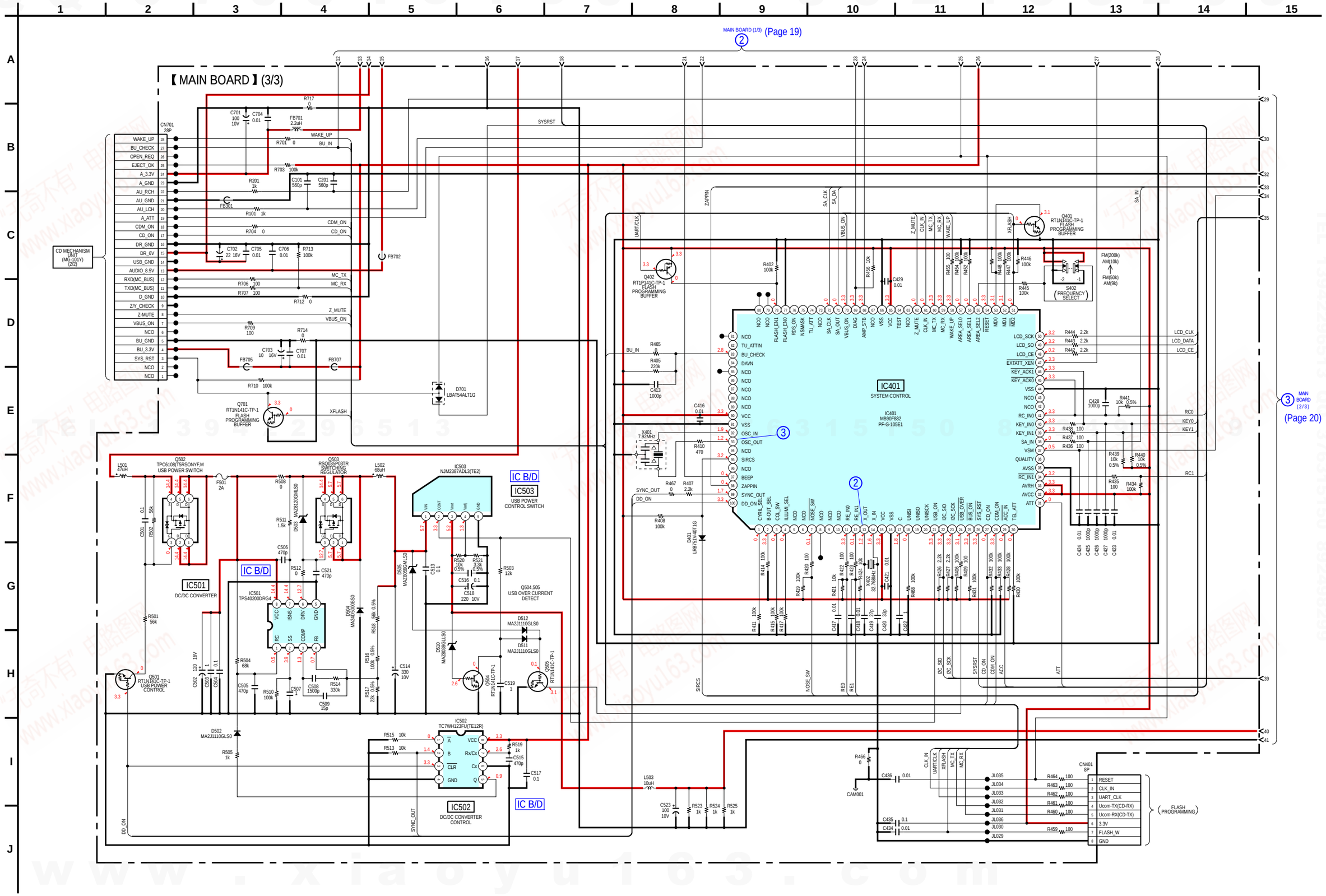

http://www.xiaoyu163.com

http://www.xiaoyu163.com

4-7. PRINTED WIRING BOARDS – KEY Section –

• : Uses unleaded solder.

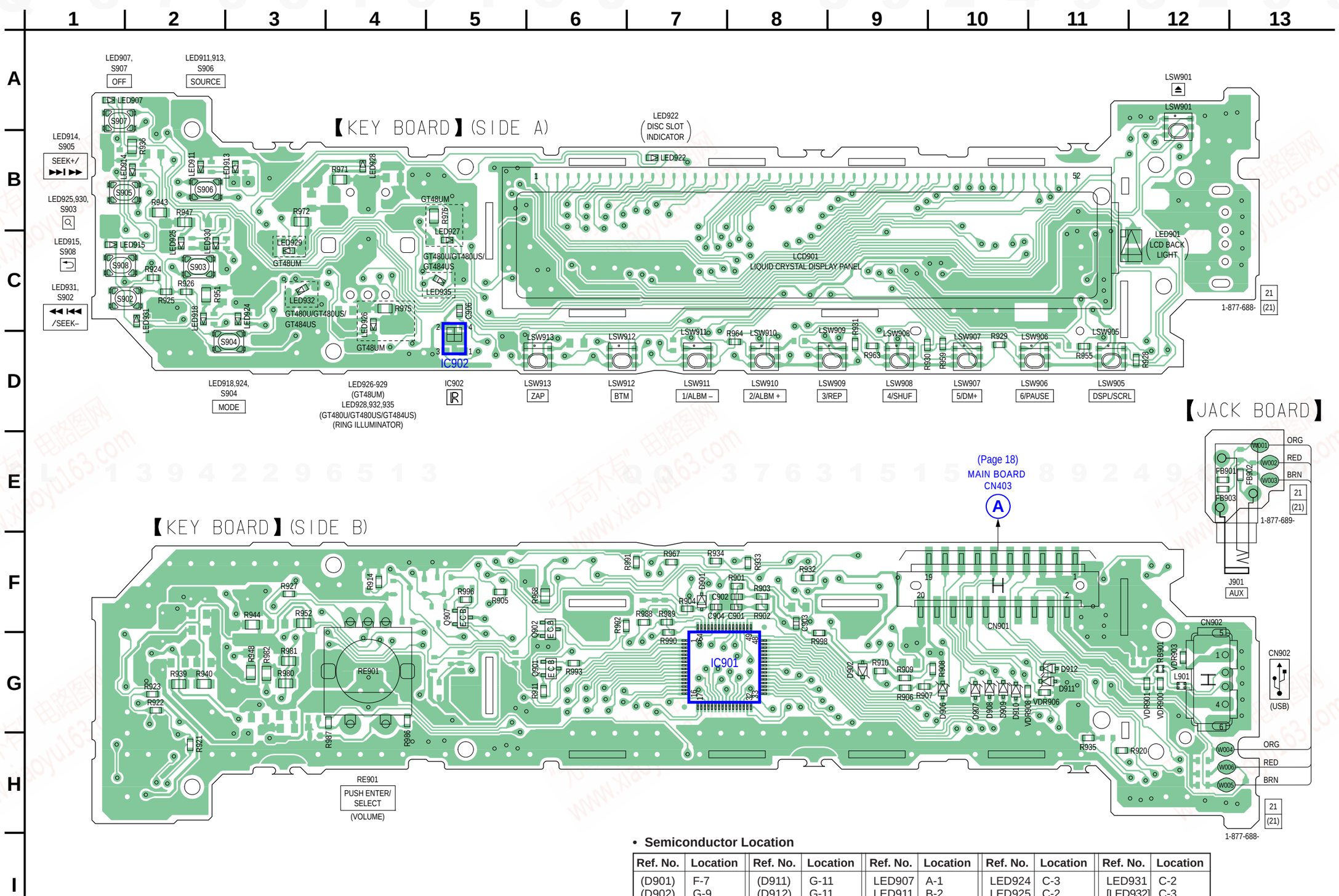

• **Semiconductor Location**

Ref. No.	Location	Ref. No.	Location	Ref. No.	Location	Ref. No.	Location	Ref. No.	Location
(D901)	F-7	(D911)	G-11	LED907	A-1	LED924	C-3	LED931	C-2
(D902)	G-9	(D912)	G-11	LED911	B-2	LED925	C-2	[LED932]	C-3
(D906)	G-10			LED913	B-3	<LED926>	C-4	[LED935]	C-5
(D907)	G-10	(IC901)	G-7	LED914	B-2	<LED927>	C-5		
(D908)	G-10	IC902	D-5	LED915	C-1	LED928	B-4	(Q901)	G-6
(D909)	G-10			LED918	C-2	<LED929>	C-3	(Q902)	F-6
(D910)	G-10	LED901	C-12	LED922	B-7	LED930	C-2	(Q907)	F-5

( ) : SIDE B
< > : CDX-GT48UM only
[ ] : CDX-GT480U/GT480US/GT484US

http://www.xiaoyu163.com

http://www.xiaoyu163.com

4-8. SCHEMATIC DIAGRAM – KEY Section –

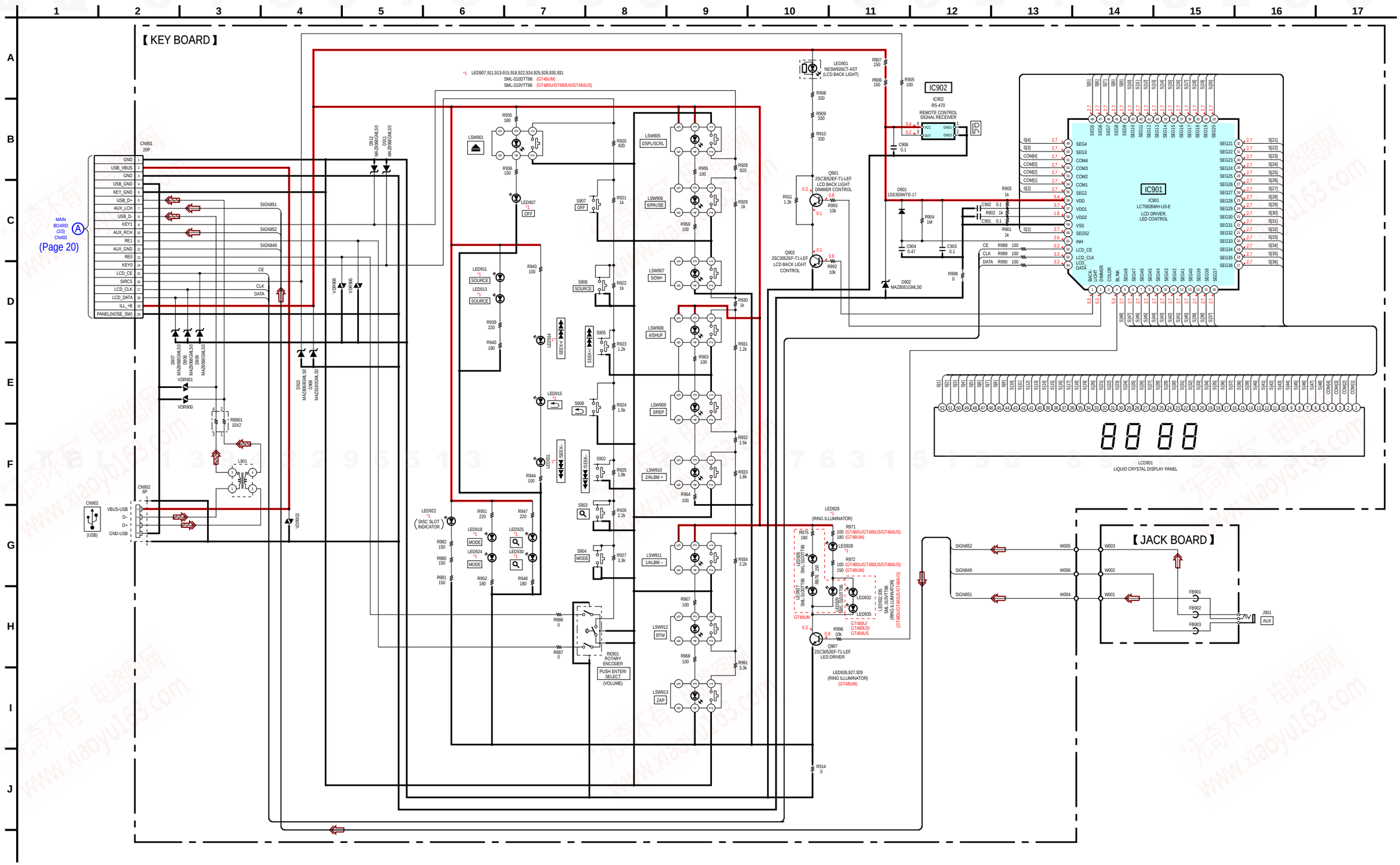

http://www.xiaoyu163.com

http://www.xiaoyu163.com

- **IC Block Diagrams**

IC301 TDA8588AJ/N2/R1 (MAIN Board (1/3))

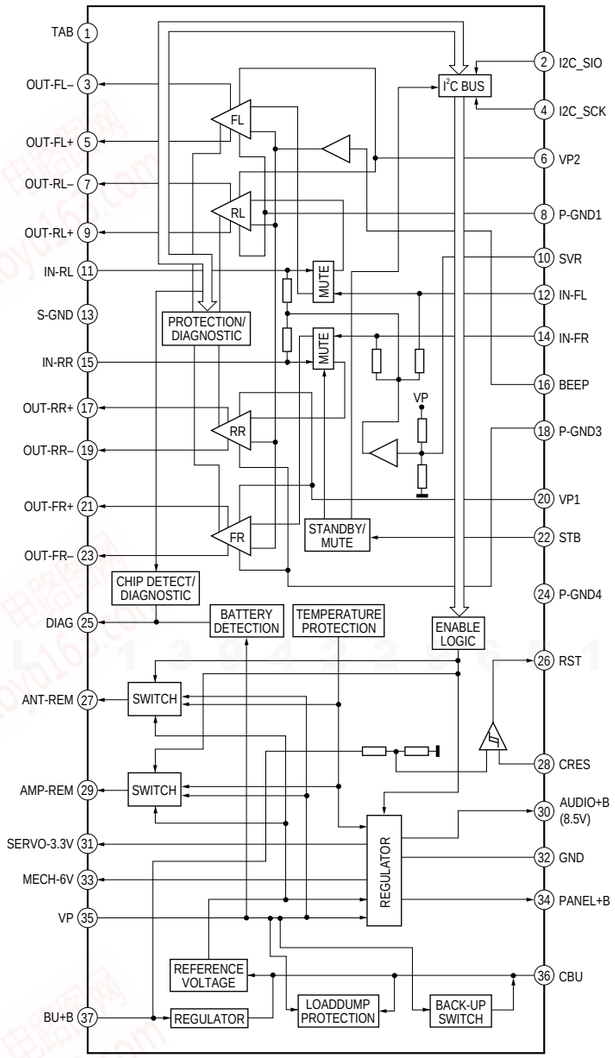

IC001 TEF6607T/V4/S470,518 (MAIN Board (2/3))

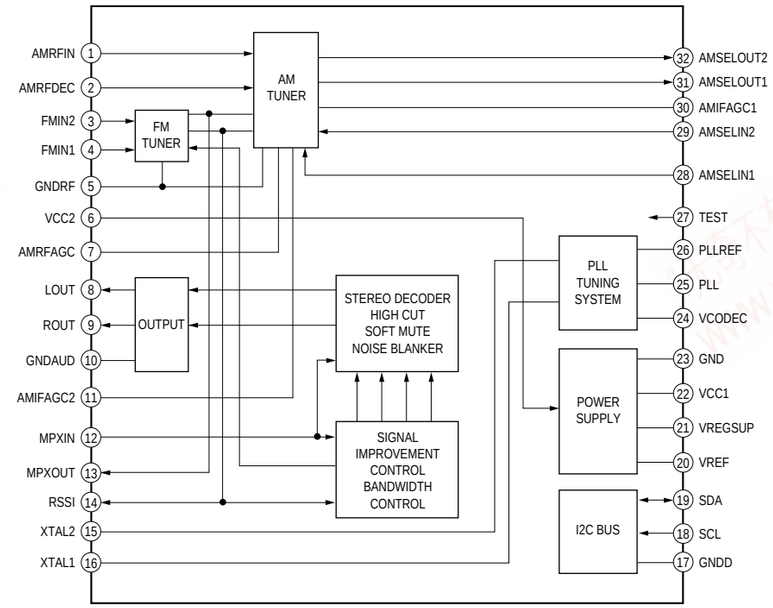

http://www.xiaoyu163.com

http://www.xiaoyu163.com

IC302 BD3447AFV-E2 (MAIN Board (2/3))

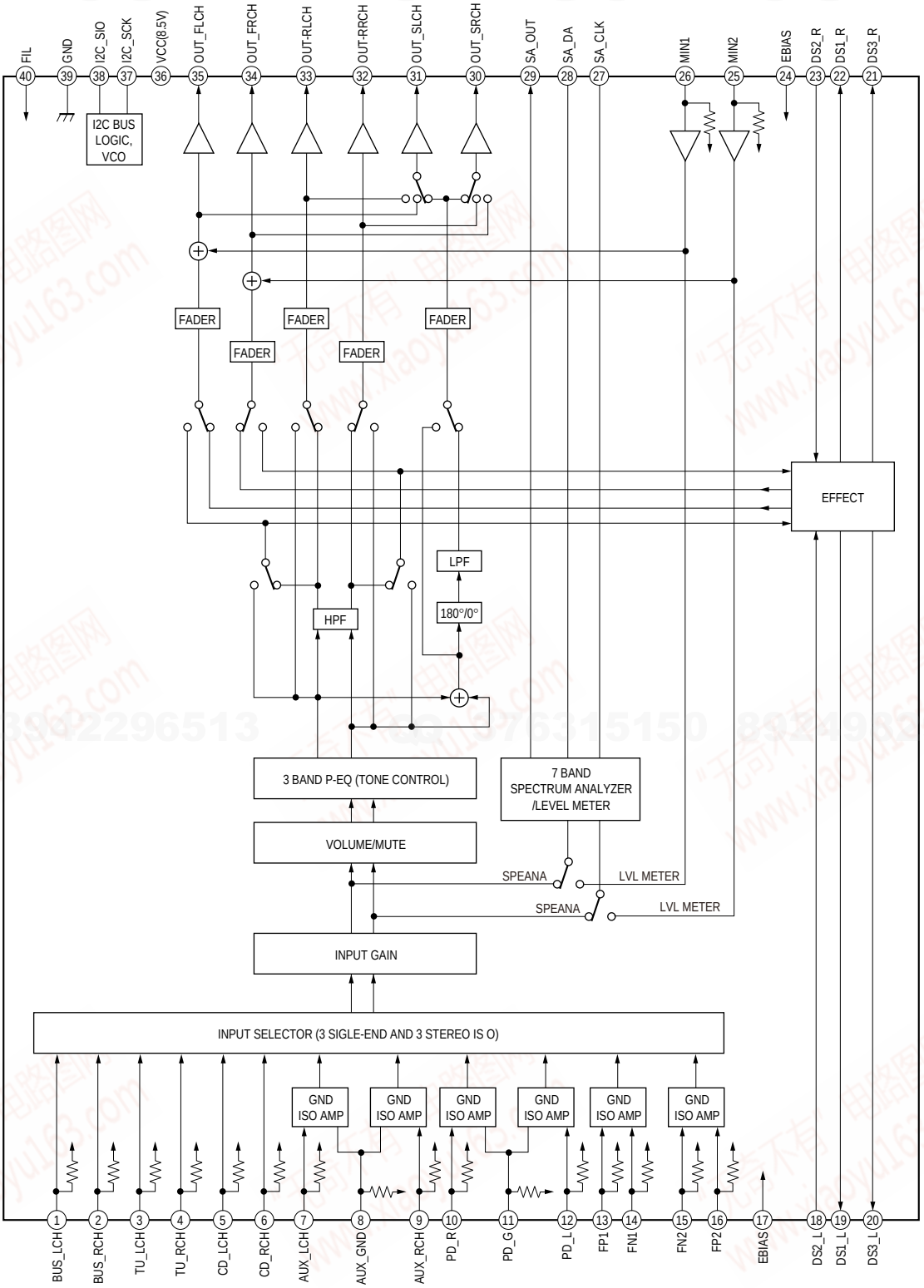

http://www.xiaoyu163.com

http://www.xiaoyu163.com

IC501 TPS40200DRG4 (MAIN Board (3/3))

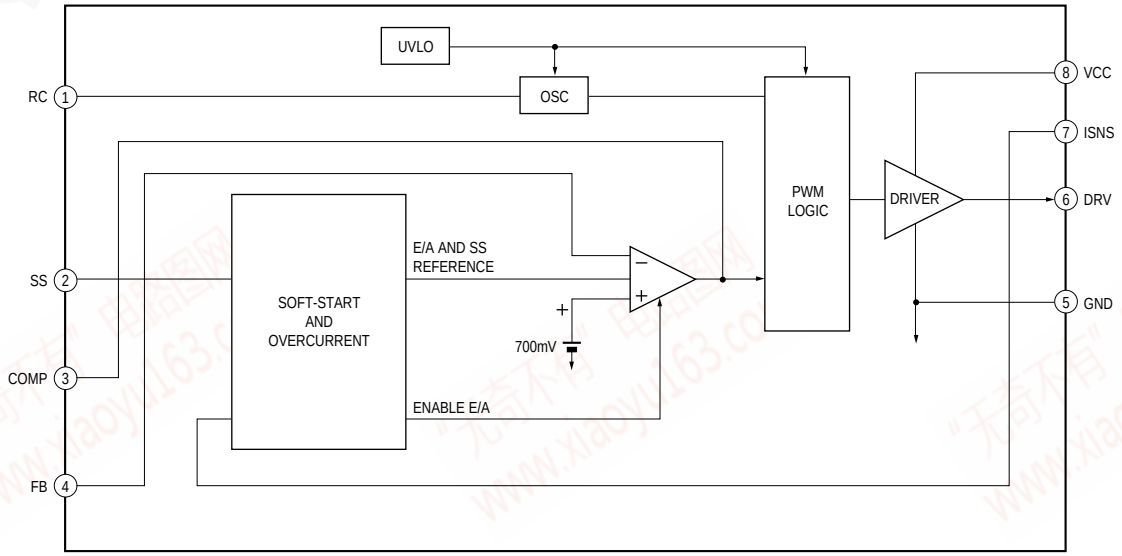

IC502 TC7WH123FU(TE12R) (MAIN Board (3/3))

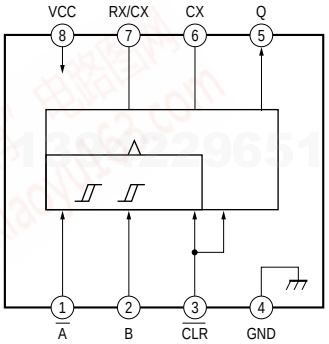

IC503 NJM2387ADL3(TE2) (MAIN Board (3/3))

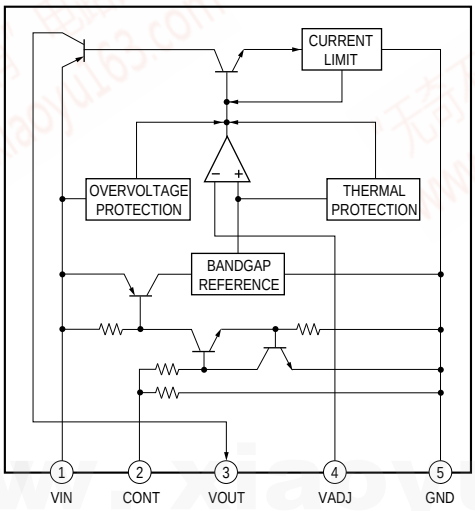

http://www.xiaoyu163.com

http://www.xiaoyu163.com

- **IC Pin Function Description**

MAIN BOARD (3/3) IC401 MB90F882PF-G-105E1 (SYSTEM CONTROL)

Pin No.	Pin Name	I/O	Description
1	CYRIL_SEL	I	Cyril select signal input (L: No cyril select)
2	B-OUT_SEL	I	Black out setting signal input (H: Black out)
3	COL_SW	I	Key illumination initial color setting signal input (L: Amber)
4	ILLUMI_SEL	I	Key illumination voltage setting signal input (L: 9 V)
5, 6	NCO	O	Not used. (Open)
7	$\overline{\text{NOSE_SW}}$	I	Front panel detach detect signal input
8 to 10	NCO	O	Not used. (Open)
11	RE_IN0	I	Rotary encoder signal input 0
12	RE_IN1	I	Rotary encoder signal input 1
13	X_OUT	O	Low speed operation clock signal output (32.768 kHz)
14	X_IN	I	Low speed operation clock signal input (32.768 kHz)
15	VCC	—	Power supply pin (+3.3 V)
16	VSS	—	Ground
17	C	—	Regulator reference capacitor connecting pin
18	UNISI	I	SONY-BUS data input (Fixed at L in this set)
19	UNISO	O	SONY-BUS data output (Not used in this set)
20	UNISCK	O	SONY-BUS clock signal output (Not used in this set)
21	USB_ON	O	USB over current detect IC control signal output
22	I2C_SIO	I/O	I2C serial data input/output
23	I2C_SCK	O	I2C serial clock signal output
24	$\overline{\text{USB_OVER}}$	I	USB over current detect signal input
25	$\overline{\text{BUS_ON}}$	O	BUS ON signal output (Fixed at H in this set)
26	$\overline{\text{SYS_RST}}$	O	System reset signal output
27	CD_ON	I	CD mechanism servo power supply control request signal input
28	CDM_ON	I	CD mechanism deck power supply control request signal input
29	$\overline{\text{ACC_IN}}$	I	Accessory power supply detect signal input
30	TEL_ATT	I	Telephone attenuator detect signal input (Fixed at L in this set)
31	ATT	O	Audio mute control signal output
32	AVCC	—	A/D converter power supply pin (+3.3 V)
33	AVRH	—	A/D converter external reference power supply pin (+3.3 V)
34	$\overline{\text{RC_IN1}}$	I	Rotary commander shift key signal input 1
35	AVSS	—	Ground for A/D converter
36	QUALITY	I	Not used. (Open)
37	VSM	I	S meter voltage detect signal input
38	SA_IN	I	Spectrum analyzer DC input
39	KEY_IN1	I	Key signal input 1
40	KEY_IN0	I	Key signal input 0
41	RC_IN0	I	Rotary commander shift key signal input 0
42, 43	NCO	O	Not used. (Open)
44	VSS	—	Ground
45	$\overline{\text{KEY_ACK0}}$	I	Key acknowledge detect signal input (Rotary commander)
46	$\overline{\text{KEY_ACK1}}$	I	Key acknowledge detect signal input (Front panel)
47	$\overline{\text{EXTATT_XEN}}$	O	L is sent when electronic volume IC has the status of CD/USB (H is sent when it has the status of other source)
48	LCD_CE	O	LCD driver chip enable signal output
49	LCD_SO	O	LCD driver serial data output
50	LCD_SCK	O	LCD driver serial clock signal output
51	$\overline{\text{MOD2}}$	I	Micon operation mode setting signal input (active: L)
52	MOD1	I	Micon operation mode setting signal input (Fixed at H in this set)
53	MOD0	I	Micon operation mode setting signal input (active: H)
54	$\overline{\text{RESET}}$	I	Reset signal input
55	AREA_SEL2	I	Destination setting pin 2
56	AREA_SEL1	I	Destination setting pin 1 (Fixed at L in this set)
57	AREA_SEL0	I	Destination setting pin 0 (Fixed at L in this set)

http://www.xiaoyu163.com

http://www.xiaoyu163.com

Pin No.	Pin Name	I/O	Description
58	WAKE_UP	O	CD mechanism deck micon wake up signal output
59	MC_RX	I	MC-BUS communication and CD mechanism deck micon communication RX input
60	MC_TX	O	MC-BUS communication and CD mechanism deck micon communication TX output
61	CLK_IN	I	Flash programming serial clock signal input
62	Z_MUTE	I	Z mute signal input
63	NCO	O	Not used. (Open)
64	TEST	O	Not used. (Open)
65	VCC	—	Power supply pin (+3.3 V)
66	VSS	—	Ground
67	NCO	O	Not used. (Open)
68	AMP_STB	O	Standby signal output for power regulator IC
69	DIAG	I	Condition signal input from power amp IC
70	VBUS_ON	I	VBUS power supply control signal input (L: VBUS OFF, H: VBUS ON)
71	SA_OUT	O	Spectrum analyzer serial data output
72	SA_CLK	O	Spectrum analyzer serial clock signal output
73	NCO	O	Not used. (Open)
74	TU_ATT	O	Tuner mute control signal output (Not used in this set)
75	NSMASK	O	Not used. (Open)
76	RDS_ON	O	RDS IC power supply control signal output (Not used in this set)
77	FLASH_EN0	I	Flash writer programming wake up signal input (Fixed at L)
78	FLASH_EN1	I	Flash writer programming wake up signal input
79 to 81	NCO	O	Not used. (Open)
82	TU_ATTIN	O	Not used. (Open)
83	BU_CHECK	I	Back up power supply detect signal input
84	DAVN	I	RDS data block sync detect signal input (Not used in this set)
85 to 89	NCO	O	Not used. (Open)
90	VCC	—	Power supply pin (+3.3 V)
91	VSS	—	Ground
92	OSC_IN	I	High speed operation clock signal input (7.92 MHz)
93	OSC_OUT	O	High speed operation clock signal output (7.92 MHz)
94	NCO	O	Not used. (Open)
95	SIRCS	I	Remote control signal input
96	NCO	O	Not used. (Open)
97	BEEP	O	Beep signal output for power amplifier IC
98	ZAPPIN	O	Zappin beep signal output
99	SYNC_OUT	O	DC/DC converter oscillation frequency control signal output
100	DD_ON	O	DC/DC converter power supply ON/OFF control signal output

http://www.xiaoyu163.com

http://www.xiaoyu163.com

SECTION 5
EXPLODED VIEWS

Note:
- -XX and -X mean standardized parts, so they may have some difference from the original one.
- Items marked "*" are not stocked since they are seldom required for routine service.
  Some delay should be anticipated when ordering these items.
- The mechanical parts with no reference number in the exploded views are not supplied.
- Color Indication of Appearance Parts Example:
  KNOB, BALANCE (WHITE) . . . (RED)
  ↑ Parts Color ↑ Cabinet's Color
- Accessories are given in the last of the electrical parts list.

The components identified by mark ⚠ or dotted line with mark ⚠ are critical for safety.
Replace only with part number specified.

- Abbreviation
  MX : Mexican model
  AR : Argentina model

5-1. MAIN SECTION

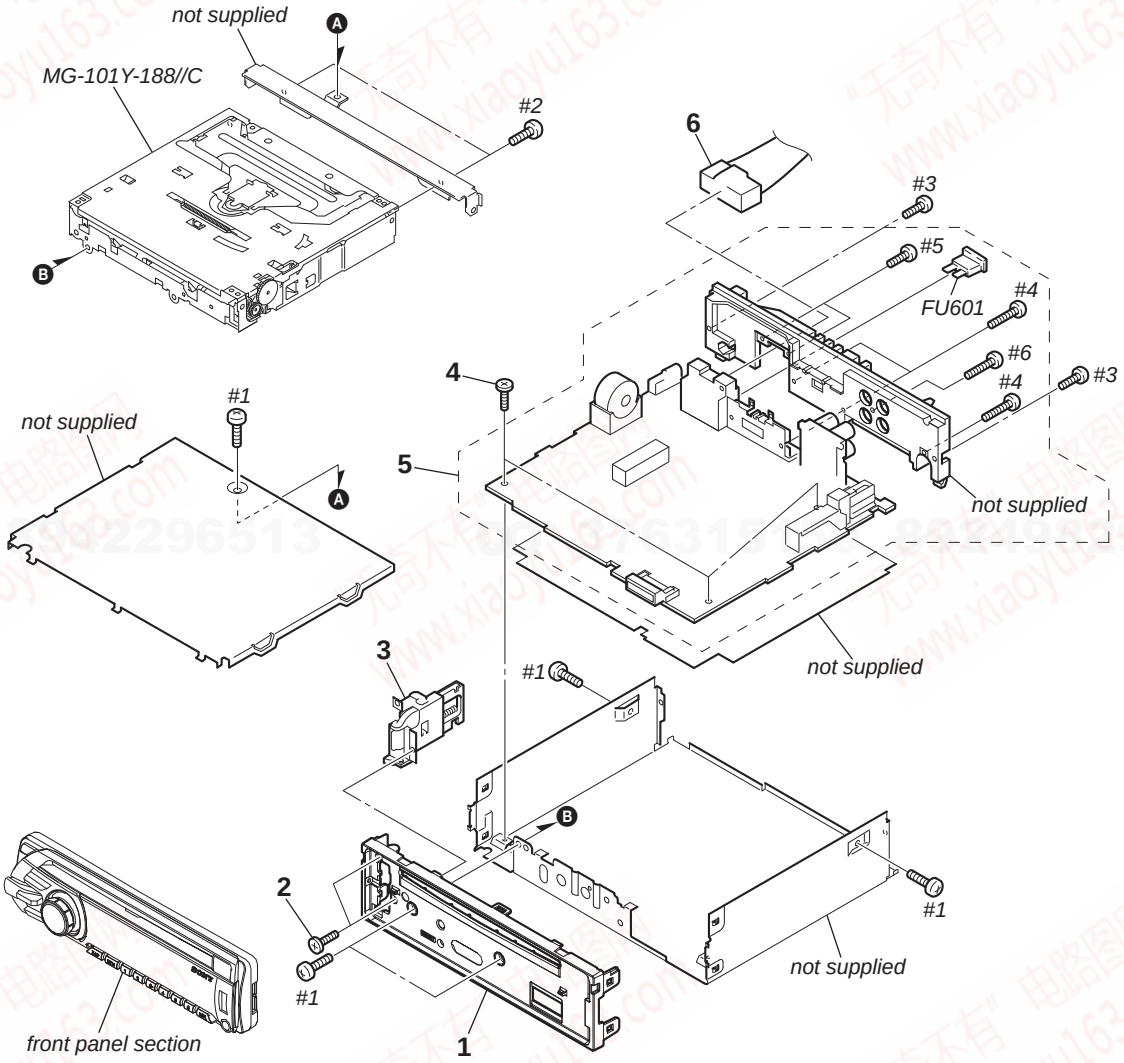

Ref. No.	Part No.	Description	Remark
1	X-2320-895-1	PANEL ASSY, SUB	
2	2-583-939-01	SCREW (+B 2X4)	
3	X-2179-691-1	LOCK ASSY	
4	2-583-940-01	SCREW (+BTT)	
5	A-1568-619-A	MAIN BOARD, COMPLETE	
6	1-776-527-11	CORD (WITH CONNECTOR) (ISO) (POWER)	(GT480US:AR)
6	1-833-762-11	CONNECTION CORD FOR AUTOMOBILE (POWER) (for Maruti Suzuki:Gasoline car)	(GT48UM)
6	1-833-974-31	CONNECTION CORD FOR AUTOMOBILE (POWER) (GT480U/GT480US:E,MX/GT484US)	
6	1-834-307-11	CONNECTION CORD FOR AUTOMOBILE (POWER) (for Maruti Suzuki:Diesel car)	(GT48UM)
FU601	1-532-877-11	FUSE (BLADE TYPE) (AUTO FUSE) 10A	
#1	7-685-792-09	SCREW +PTT 2.6X6 (S)	
#2	7-685-790-01	SCREW +PTT 2.6X4 (S)	
#3	7-685-793-09	SCREW +PTT 2.6X8 (S)	
#4	7-685-794-09	SCREW +PTT 2.6X10 (S)	
#5	7-685-134-19	SCREW +P 2.6X8 TYPE2 NON-SLIT	
#6	7-621-284-40	SCREW +P 2.6X10	

http://www.xiaoyu163.com

http://www.xiaoyu163.com

5-2. FRONT PANEL SECTION

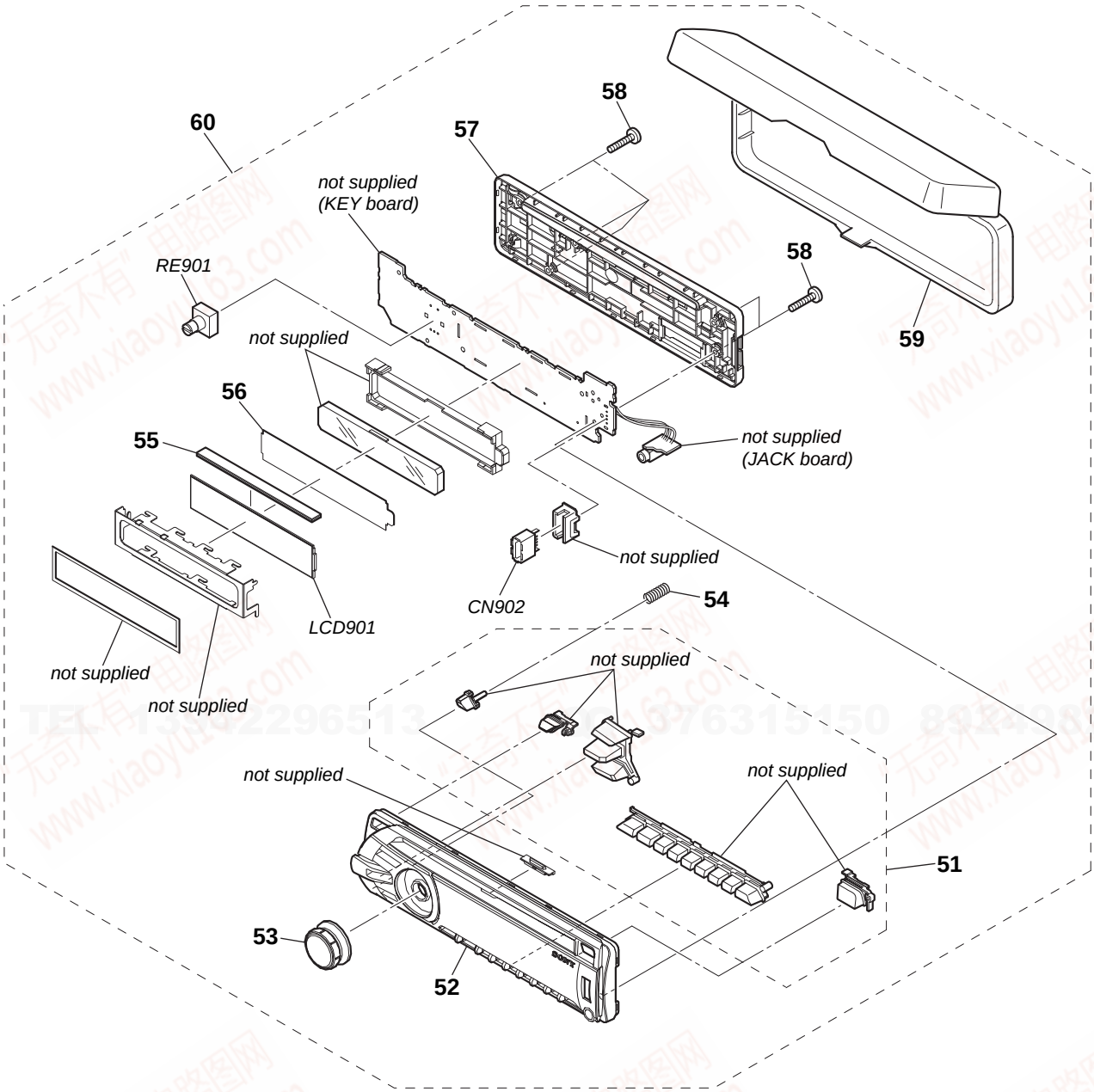

Ref. No.	Part No.	Description	Remark
51	X-2320-896-1	BUTTON ASSY (S)	
52	X-2320-897-1	PANEL (SV) ASSY, FRONT (GT480U)	
52	X-2320-902-1	PANEL (SV) ASSY, FRONT (GT480US)	
52	X-2320-903-1	PANEL (SV) ASSY, FRONT (GT484US)	
52	X-2320-904-1	PANEL (SV) ASSY, FRONT (GT48UM)	
53	X-2318-581-1	KNOB (VOL) (SV) ASSY	
54	2-349-626-01	SPRING (RELEASE)	
55	1-780-659-11	CONNECTOR (RUBBER)	
56	3-398-493-01	ILLUMINATOR (LCD)	
57	3-876-504-01	PANEL, BACK	

Ref. No.	Part No.	Description	Remark
58	3-250-543-91	SCREW (+B P-TITE M2)	
59	X-2186-697-1	CASE ASSY (for FRONT PANEL)	
60	A-1568-621-A	PANEL COMPLETE ASSY, FRONT (GT480U)	
60	A-1568-661-A	PANEL COMPLETE ASSY, FRONT (GT480US)	
60	A-1568-675-A	PANEL COMPLETE ASSY, FRONT (GT484US)	
60	A-1568-678-A	PANEL COMPLETE ASSY, FRONT (GT48UM)	
CN902	1-820-858-21	CONNECTOR, USB (SOCKET) 6P (USB)	
LCD901	1-802-764-11	DISPLAY PANEL, LIQUID CRYSTAL	
RE901	1-479-902-32	ENCODER, ROTARY (PUSH ENTER/SELECT (VOLUME))	

http://www.xiaoyu163.com

http://www.xiaoyu163.com

5-3. CD MECHANISM SECTION (MG-101Y-188//C)

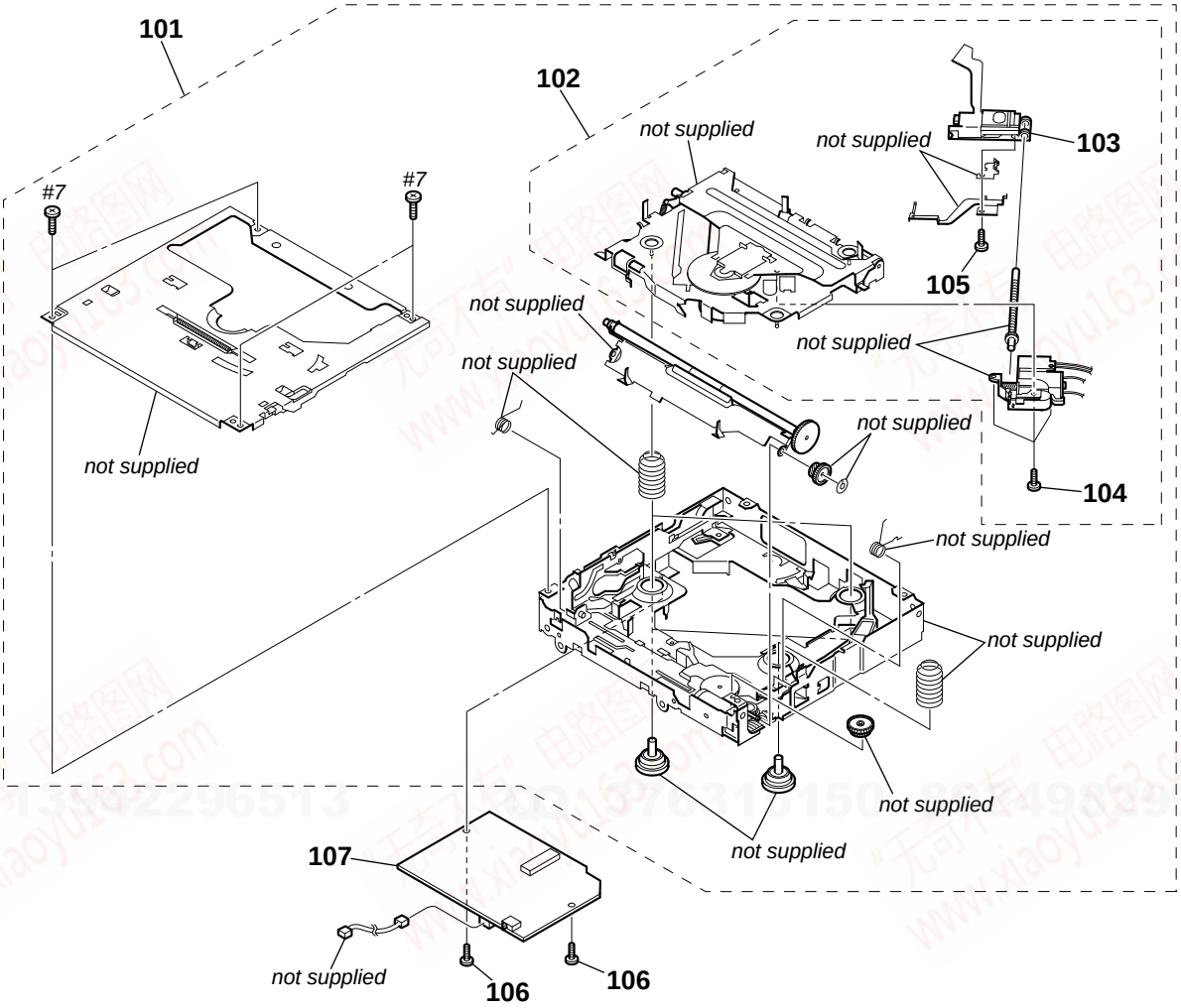

Ref. No.	Part No.	Description	Remark
101	A-1283-704-A	MECHANICAL BLOCK ASSY (08)	
102	A-1283-705-A	DAXEV08//C	
⚠ 103	X-2149-672-1	SERVICE ASSY, OP (DAX-25A)	
104	2-626-869-21	SCREW (M2X3), SERRATION	
105	3-348-998-51	SCREW (M1.4X3.5), TAPPING, PAN	
106	3-352-758-31	SCREW (M1.7X2.5), TOOTHED LOCK	
107	A-1555-002-A	SERVO BOARD, COMPLETE	
#7	7-627-000-00	SCREW, PRECISION +P1.7X2.2 TYPE3	

http://www.xiaoyu163.com

http://www.xiaoyu163.com

JACK KEY

SECTION 6
ELECTRICAL PARTS LIST

Note:

- Due to standardization, replacements in the parts list may be different from the parts specified in the diagrams or the components used on the set.
- -XX and -X mean standardized parts, so they may have some difference from the original one.
- Items marked "---" are not stocked since they are seldom required for routine service.
  Some delay should be anticipated when ordering these items.
- CAPACITORS
  uF: μF
- COILS
  uH: μH
- RESISTORS
  All resistors are in ohms.
  METAL: Metal-film resistor.
  METAL OXIDE: Metal oxide-film resistor.
  F: nonflammable
- SEMICONDUCTORS
  In each case, u: μ, for example:
  uA. . : μA. . , uPA. . , μPA. . ,
  uPB. . : μPB. . , uPC. . , μPC. . ,
  uPD. . : μPD. .

When indicating parts by reference number, please include the board name.

The components identified by mark ⚠ or dotted line with mark ⚠ are critical for safety.
Replace only with part number specified.

- Abbreviation
  MX : Mexican model
  AR : Argentina model

Ref. No.	Part No.	Description	Remark
		JACK BOARD	
		**********	
		< FERRITE BEAD >	
FB901	1-414-760-21	INDUCTOR, FERRITE BEAD	
FB902	1-414-760-21	INDUCTOR, FERRITE BEAD	
FB903	1-414-760-21	INDUCTOR, FERRITE BEAD	
		< JACK >	
J901	1-819-732-21	JACK (DIA. 3.5) (AUX)	
		KEY BOARD	
		**********	
	1-780-659-11	CONNECTOR (RUBBER)	
	3-398-493-01	ILLUMINATOR (LCD)	
		< CAPACITOR >	
C901	1-107-826-11	CERAMIC CHIP 0.1uF 10% 16V	
C902	1-107-826-11	CERAMIC CHIP 0.1uF 10% 16V	
C903	1-107-826-11	CERAMIC CHIP 0.1uF 10% 16V	
C904	1-125-891-11	CERAMIC CHIP 0.47uF 10% 10V	
C906	1-107-826-11	CERAMIC CHIP 0.1uF 10% 16V	
		< CONNECTOR >	
CN901	1-820-619-11	PLUG, CONNECTOR 20P	
CN902	1-820-858-21	CONNECTOR, USB (SOCKET) 6P (USB)	
		< DIODE >	
D901	6-501-193-01	DIODE 1SS355WTE-17	
D902	6-501-730-01	DIODE MAZ8051GMLS0	
D906	6-501-782-01	DIODE MAZ8180GMLS0	
D907	6-501-743-01	DIODE MAZ8068GMLS0	
D908	6-501-743-01	DIODE MAZ8068GMLS0	
D909	6-501-743-01	DIODE MAZ8068GMLS0	
D910	6-501-743-01	DIODE MAZ8068GMLS0	
D911	6-501-743-01	DIODE MAZ8068GMLS0	
D912	6-501-743-01	DIODE MAZ8068GMLS0	
		< IC >	
IC901	6-707-063-01	IC LC75826WH-US-E	
IC902	6-600-629-01	IC RS-470 (IR)	
		< COIL >	
L901	1-457-223-11	COIL, COMMON MODE CHOKE	

Ref. No.	Part No.	Description	Remark
		< LIQUID CRYSTAL DISPLAY >	
LCD901	1-802-764-11	DISPLAY PANEL, LIQUID CRYSTAL	
		< DIODE >	
LED901	6-501-339-01	LED NESW505CT-AST (LCD BACK LIGHT)	
LED907	8-719-053-08	LED SML-310DTT86 (OFF) (GT48UM)	
LED907	8-719-053-09	LED SML-310VTT86 (OFF)	(GT480U/GT480US/GT484US)
LED911	8-719-053-08	LED SML-310DTT86 (SOURCE) (GT48UM)	
LED911	8-719-053-09	LED SML-310VTT86 (SOURCE)	(GT480U/GT480US/GT484US)
LED913	8-719-053-08	LED SML-310DTT86 (SOURCE) (GT48UM)	
LED913	8-719-053-09	LED SML-310VTT86 (SOURCE)	(GT480U/GT480US/GT484US)
LED914	8-719-053-08	LED SML-310DTT86 (SEEK+/ ▶▶I ▶▶)	(GT48UM)
LED914	8-719-053-09	LED SML-310VTT86 (SEEK+/ ▶▶I ▶▶)	(GT480U/GT480US/GT484US)
LED915	8-719-053-08	LED SML-310DTT86 (↩ (BACK)) (GT48UM)	
LED915	8-719-053-09	LED SML-310VTT86 (↩ (BACK))	(GT480U/GT480US/GT484US)
LED918	8-719-053-08	LED SML-310DTT86 (MODE) (GT48UM)	
LED918	8-719-053-09	LED SML-310VTT86 (MODE)	(GT480U/GT480US/GT484US)
LED922	8-719-053-08	LED SML-310DTT86 (DISC SLOT INDICATOR)	(GT48UM)
LED922	8-719-053-09	LED SML-310VTT86 (DISC SLOT INDICATOR)	(GT480U/GT480US/GT484US)
LED924	8-719-053-08	LED SML-310DTT86 (MODE) (GT48UM)	
LED924	8-719-053-09	LED SML-310VTT86 (MODE)	(GT480U/GT480US/GT484US)
LED925	8-719-053-08	LED SML-310DTT86 (🔍 (BROWSE)) (GT48UM)	
LED925	8-719-053-09	LED SML-310VTT86 (🔍 (BROWSE))	(GT480U/GT480US/GT484US)
LED926	8-719-053-08	LED SML-310DTT86 (RING ILLUMINATOR)	(GT48UM)
LED927	8-719-053-08	LED SML-310DTT86 (RING ILLUMINATOR)	(GT48UM)
LED928	8-719-053-08	LED SML-310DTT86 (RING ILLUMINATOR)	(GT48UM)
LED928	8-719-053-09	LED SML-310VTT86 (RING ILLUMINATOR)	(GT480U/GT480US/GT484US)
LED929	8-719-053-08	LED SML-310DTT86 (RING ILLUMINATOR)	(GT48UM)
LED930	8-719-053-08	LED SML-310DTT86 (🔍 (BROWSE)) (GT48UM)	
LED930	8-719-053-09	LED SML-310VTT86 (🔍 (BROWSE))	(GT480U/GT480US/GT484US)

http://www.xiaoyu163.com

http://www.xiaoyu163.com

KEY

Ref. No.	Part No.	Description	Remark
LED931	8-719-053-08	LED SML-310DTT86 (◀◀ ⏮ /SEEK–)	(GT48UM)
LED931	8-719-053-09	LED SML-310VTT86 (◀◀ ⏮ /SEEK–)	(GT480U/GT480US/GT484US)
LED932	8-719-053-09	LED SML-310VTT86 (RING ILLUMINATOR)	(GT480U/GT480US/GT484US)
LED935	8-719-053-09	LED SML-310VTT86 (RING ILLUMINATOR)	(GT480U/GT480US/GT484US)
		< SWITCH >	
LSW901	1-786-805-13	SWITCH, TACTILE (WITH LED) (⏏)	(GT480U/GT480US/GT484US)
LSW901	1-786-867-13	SWITCH, TACTILE (WITH LED) (⏏) (GT48UM)	
LSW905	1-786-805-13	SWITCH, TACTILE (WITH LED) (DSPL/SCRL)	(GT480U/GT480US/GT484US)
LSW905	1-786-867-13	SWITCH, TACTILE (WITH LED) (DSPL/SCRL)	(GT48UM)
LSW906	1-786-805-13	SWITCH, TACTILE (WITH LED) (6/PAUSE)	(GT480U/GT480US/GT484US)
LSW906	1-786-867-13	SWITCH, TACTILE (WITH LED) (6/PAUSE)	(GT48UM)
LSW907	1-786-805-13	SWITCH, TACTILE (WITH LED) (5/DM+)	(GT480U/GT480US/GT484US)
LSW907	1-786-867-13	SWITCH, TACTILE (WITH LED) (5/DM+) (GT48UM)	
LSW908	1-786-805-13	SWITCH, TACTILE (WITH LED) (4/SHUF)	(GT480U/GT480US/GT484US)
LSW908	1-786-867-13	SWITCH, TACTILE (WITH LED) (4/SHUF)	(GT48UM)
LSW909	1-786-805-13	SWITCH, TACTILE (WITH LED) (3/REP)	(GT480U/GT480US/GT484US)
LSW909	1-786-867-13	SWITCH, TACTILE (WITH LED) (3/REP) (GT48UM)	
LSW910	1-786-805-13	SWITCH, TACTILE (WITH LED) (2/ALBM +)	(GT480U/GT480US/GT484US)
LSW910	1-786-867-13	SWITCH, TACTILE (WITH LED) (2/ALBM +)	(GT48UM)
LSW911	1-786-805-13	SWITCH, TACTILE (WITH LED) (1/ALBM –)	(GT480U/GT480US/GT484US)
LSW911	1-786-867-13	SWITCH, TACTILE (WITH LED) (1/ALBM –)	(GT48UM)
LSW912	1-786-805-13	SWITCH, TACTILE (WITH LED) (BTM)	(GT480U/GT480US/GT484US)
LSW912	1-786-867-13	SWITCH, TACTILE (WITH LED) (BTM) (GT48UM)	
LSW913	1-786-805-13	SWITCH, TACTILE (WITH LED) (ZAP)	(GT480U/GT480US/GT484US)
LSW913	1-786-867-13	SWITCH, TACTILE (WITH LED) (ZAP) (GT48UM)	
		< TRANSISTOR >	
Q901	8-729-620-07	TRANSISTOR 2SC3052EF-T1-LEF	
Q902	8-729-620-07	TRANSISTOR 2SC3052EF-T1-LEF	
Q907	8-729-620-07	TRANSISTOR 2SC3052EF-T1-LEF	
		< RESISTOR >	
R901	1-216-821-11	METAL CHIP 1K 5%	1/10W
R902	1-216-821-11	METAL CHIP 1K 5%	1/10W
R903	1-216-821-11	METAL CHIP 1K 5%	1/10W
R904	1-216-857-11	METAL CHIP 1M 5%	1/10W
R905	1-216-809-11	METAL CHIP 100 5%	1/10W
R906	1-216-811-11	METAL CHIP 150 5%	1/10W
R907	1-216-811-11	METAL CHIP 150 5%	1/10W
R908	1-216-815-11	METAL CHIP 330 5%	1/10W
R909	1-216-815-11	METAL CHIP 330 5%	1/10W
R910	1-216-815-11	METAL CHIP 330 5%	1/10W
R911	1-216-822-11	METAL CHIP 1.2K 5%	1/10W
R914	1-216-864-11	SHORT CHIP 0	
R920	1-216-820-11	METAL CHIP 820 5%	1/10W
R921	1-216-821-11	METAL CHIP 1K 5%	1/10W
R922	1-216-821-11	METAL CHIP 1K 5%	1/10W
R923	1-216-822-11	METAL CHIP 1.2K 5%	1/10W
R924	1-216-823-11	METAL CHIP 1.5K 5%	1/10W
R925	1-216-824-11	METAL CHIP 1.8K 5%	1/10W
R926	1-216-825-11	METAL CHIP 2.2K 5%	1/10W
R927	1-216-827-11	METAL CHIP 3.3K 5%	1/10W
R928	1-216-820-11	METAL CHIP 820 5%	1/10W
R929	1-216-821-11	METAL CHIP 1K 5%	1/10W
R930	1-216-821-11	METAL CHIP 1K 5%	1/10W
R931	1-216-822-11	METAL CHIP 1.2K 5%	1/10W
R932	1-216-823-11	METAL CHIP 1.5K 5%	1/10W
R933	1-216-824-11	METAL CHIP 1.8K 5%	1/10W
R934	1-216-825-11	METAL CHIP 2.2K 5%	1/10W
R935	1-216-812-11	METAL CHIP 180 5%	1/10W
R936	1-216-029-00	METAL CHIP 150 5%	1/10W
R939	1-216-033-00	METAL CHIP 220 5%	1/10W
R940	1-216-031-00	METAL CHIP 180 5%	1/10W
R943	1-216-025-11	METAL CHIP 100 5%	1/10W
R944	1-216-025-11	METAL CHIP 100 5%	1/10W
R947	1-216-033-00	METAL CHIP 220 5%	1/10W
R948	1-216-031-00	METAL CHIP 180 5%	1/10W
R951	1-216-033-00	METAL CHIP 220 5%	1/10W
R952	1-216-031-00	METAL CHIP 180 5%	1/10W
R955	1-216-809-11	METAL CHIP 100 5%	1/10W
R959	1-216-809-11	METAL CHIP 100 5%	1/10W
R963	1-216-809-11	METAL CHIP 100 5%	1/10W
R964	1-216-809-11	METAL CHIP 100 5%	1/10W
R967	1-216-809-11	METAL CHIP 100 5%	1/10W
R968	1-216-025-11	METAL CHIP 100 5%	1/10W
R971	1-216-025-11	METAL CHIP 100 5%	1/10W (GT480U/GT480US/GT484US)
R971	1-216-031-00	METAL CHIP 180 5%	1/10W (GT48UM)
R972	1-216-025-11	METAL CHIP 100 5%	1/10W (GT480U/GT480US/GT484US)
R972	1-216-029-00	METAL CHIP 150 5%	1/10W (GT48UM)
R975	1-216-031-00	METAL CHIP 180 5%	1/10W (GT48UM)
R976	1-216-029-00	METAL CHIP 150 5%	1/10W (GT48UM)
R980	1-216-029-00	METAL CHIP 150 5%	1/10W
R981	1-216-029-00	METAL CHIP 150 5%	1/10W
R982	1-216-029-00	METAL CHIP 150 5%	1/10W
R986	1-216-864-11	SHORT CHIP 0	
R987	1-216-864-11	SHORT CHIP 0	
R988	1-216-809-11	METAL CHIP 100 5%	1/10W
R989	1-216-809-11	METAL CHIP 100 5%	1/10W
R990	1-216-809-11	METAL CHIP 100 5%	1/10W
R991	1-216-827-11	METAL CHIP 3.3K 5%	1/10W
R992	1-216-833-11	METAL CHIP 10K 5%	1/10W
R993	1-216-833-11	METAL CHIP 10K 5%	1/10W
R996	1-216-833-11	METAL CHIP 10K 5%	1/10W
R998	1-216-864-11	SHORT CHIP 0	
		< NETWORK RESISTOR >	
RB901	1-239-662-81	RESISTOR, NETWORK 10X2	

http://www.xiaoyu163.com

http://www.xiaoyu163.com

KEY MAIN

Ref. No.	Part No.	Description				Remark
		< ROTARY ENCODER >				
RE901	1-479-902-32	ENCODER, ROTARY (PUSH ENTER/SELECT (VOLUME))				
		< SWITCH >				
S902	1-786-653-11	SWITCH, TACTILE (◀◀ ⏮ /SEEK–)				
S903	1-786-653-11	SWITCH, TACTILE (🔍 (BROWSE))				
S904	1-786-653-11	SWITCH, TACTILE (MODE)				
S905	1-786-653-11	SWITCH, TACTILE (SEEK+/ ⏭ ▶▶)				
S906	1-786-653-11	SWITCH, TACTILE (SOURCE)				
S907	1-786-653-11	SWITCH, TACTILE (OFF)				
S908	1-786-653-11	SWITCH, TACTILE (↩ (BACK))				
		< VARISTOR >				
VDR900	1-804-988-21	VARISTOR, CHIP (1608)				
VDR901	1-804-988-21	VARISTOR, CHIP (1608)				
VDR903	1-804-988-21	VARISTOR, CHIP (1608)				
VDR906	1-804-988-21	VARISTOR, CHIP (1608)				
VDR908	1-804-988-21	VARISTOR, CHIP (1608)				
**********						
	A-1568-619-A	MAIN BOARD, COMPLETE **********				
	7-621-284-40	SCREW +P 2.6X10				
	7-685-134-19	SCREW +P 2.6X8 TYPE2 NON-SLIT				
	7-685-794-09	SCREW +PTT 2.6X10 (S)				
		< CAPACITOR >				
C1	1-162-964-11	CERAMIC CHIP	0.001uF	10%	50V	
C5	1-162-964-11	CERAMIC CHIP	0.001uF	10%	50V	
C6	1-162-915-11	CERAMIC CHIP	10PF	0.5PF	50V	
C7	1-162-911-11	CERAMIC CHIP	6PF	0.5PF	50V	
C8	1-162-970-11	CERAMIC CHIP	0.01uF	10%	25V	
C9	1-107-826-11	CERAMIC CHIP	0.1uF	10%	16V	
C12	1-127-715-11	CERAMIC CHIP	0.22uF	10%	16V	
C13	1-100-742-11	CERAMIC CHIP	2.2uF	20%	10V	
C16	1-125-891-11	CERAMIC CHIP	0.47uF	10%	10V	
C17	1-107-826-11	CERAMIC CHIP	0.1uF	10%	16V	
C18	1-162-916-11	CERAMIC CHIP	12PF	5%	50V	
C19	1-162-970-11	CERAMIC CHIP	0.01uF	10%	25V	
C20	1-162-970-11	CERAMIC CHIP	0.01uF	10%	25V	
C21	1-165-908-11	CERAMIC CHIP	1uF	10%	10V	
C22	1-162-970-11	CERAMIC CHIP	0.01uF	10%	25V	
C23	1-162-970-11	CERAMIC CHIP	0.01uF	10%	25V	
C24	1-107-826-11	CERAMIC CHIP	0.1uF	10%	16V	
C25	1-107-826-11	CERAMIC CHIP	0.1uF	10%	16V	
C26	1-107-826-11	CERAMIC CHIP	0.1uF	10%	16V	
C27	1-107-826-11	CERAMIC CHIP	0.1uF	10%	16V	
C28	1-126-947-11	ELECT	47uF	20%	35V	
C101	1-164-739-11	CERAMIC CHIP	560PF	5%	50V	
C103	1-126-961-11	ELECT	2.2uF	20%	50V	
C104	1-137-712-11	CERAMIC CHIP	0.0047uF	20%	250V	
C105	1-126-960-11	ELECT	1uF	20%	50V	
C106	1-126-964-11	ELECT	10uF	20%	50V	
C107	1-163-251-11	CERAMIC CHIP	100PF	5%	50V	
C108	1-126-964-11	ELECT	10uF	20%	50V	
C109	1-165-908-11	CERAMIC CHIP	1uF	10%	10V	
C110	1-165-908-11	CERAMIC CHIP	1uF	10%	10V	
C111	1-162-927-11	CERAMIC CHIP	100PF	5%	50V	
C112	1-126-964-11	ELECT	10uF	20%	50V	
C113	1-163-251-11	CERAMIC CHIP	100PF	5%	50V	
C114	1-165-908-11	CERAMIC CHIP	1uF	10%	10V	
C115	1-165-908-11	CERAMIC CHIP	1uF	10%	10V	
C116	1-162-927-11	CERAMIC CHIP	100PF	5%	50V	
C201	1-164-739-11	CERAMIC CHIP	560PF	5%	50V	
C203	1-126-961-11	ELECT	2.2uF	20%	50V	
C204	1-137-712-11	CERAMIC CHIP	0.0047uF	20%	250V	
C205	1-126-960-11	ELECT	1uF	20%	50V	
C206	1-126-964-11	ELECT	10uF	20%	50V	
C207	1-163-251-11	CERAMIC CHIP	100PF	5%	50V	
C208	1-126-964-11	ELECT	10uF	20%	50V	
C209	1-165-908-11	CERAMIC CHIP	1uF	10%	10V	
C210	1-165-908-11	CERAMIC CHIP	1uF	10%	10V	
C211	1-162-927-11	CERAMIC CHIP	100PF	5%	50V	
C212	1-126-964-11	ELECT	10uF	20%	50V	
C213	1-163-251-11	CERAMIC CHIP	100PF	5%	50V	
C214	1-165-908-11	CERAMIC CHIP	1uF	10%	10V	
C215	1-165-908-11	CERAMIC CHIP	1uF	10%	10V	
C216	1-162-927-11	CERAMIC CHIP	100PF	5%	50V	
C301	1-162-964-11	CERAMIC CHIP	0.001uF	10%	50V	
C302	1-162-923-11	CERAMIC CHIP	47PF	5%	50V	
C303	1-128-551-11	ELECT	22uF	20%	63V	
C304	1-115-340-11	CERAMIC CHIP	0.22uF	10%	25V	
C305	1-115-340-11	CERAMIC CHIP	0.22uF	10%	25V	
C306	1-165-908-11	CERAMIC CHIP	1uF	10%	10V	
C307	1-124-589-11	ELECT	47uF	20%	16V	
C308	1-162-970-11	CERAMIC CHIP	0.01uF	10%	25V	
C309	1-124-233-11	ELECT	10uF	20%	16V	
C311	1-162-970-11	CERAMIC CHIP	0.01uF	10%	25V	
C312	1-124-233-11	ELECT	10uF	20%	16V	
C313	1-124-233-11	ELECT	10uF	20%	16V	
C314	1-162-923-11	CERAMIC CHIP	47PF	5%	50V	
C315	1-125-889-11	CERAMIC CHIP	2.2uF	10%	10V	
C316	1-107-826-11	CERAMIC CHIP	0.1uF	10%	16V	
C317	1-126-934-11	ELECT	220uF	20%	16V	
C318	1-165-908-11	CERAMIC CHIP	1uF	10%	10V	
C319	1-126-964-11	ELECT	10uF	20%	50V	
C322	1-126-947-11	ELECT	47uF	20%	35V	
C323	1-126-961-11	ELECT	2.2uF	20%	50V	
C401	1-162-970-11	CERAMIC CHIP	0.01uF	10%	25V	
C402	1-107-826-11	CERAMIC CHIP	0.1uF	10%	16V	
C403	1-128-057-11	ELECT	330uF	20%	6.3V	
C404	1-115-340-11	CERAMIC CHIP	0.22uF	10%	25V	
C405	1-115-340-11	CERAMIC CHIP	0.22uF	10%	25V	
C406	1-162-970-11	CERAMIC CHIP	0.01uF	10%	25V	
C407	1-162-970-11	CERAMIC CHIP	0.01uF	10%	25V	
C409	1-126-926-11	ELECT	1000uF	20%	10V	
C411	1-126-924-11	ELECT	330uF	20%	10V	
C413	1-162-964-11	CERAMIC CHIP	0.001uF	10%	50V	
C416	1-162-970-11	CERAMIC CHIP	0.01uF	10%	25V	
C417	1-162-970-11	CERAMIC CHIP	0.01uF	10%	25V	
C418	1-162-970-11	CERAMIC CHIP	0.01uF	10%	25V	
C419	1-162-920-11	CERAMIC CHIP	27PF	5%	50V	
C420	1-162-921-11	CERAMIC CHIP	33PF	5%	50V	
C421	1-162-970-11	CERAMIC CHIP	0.01uF	10%	25V	
C422	1-165-908-11	CERAMIC CHIP	1uF	10%	10V	
C423	1-162-970-11	CERAMIC CHIP	0.01uF	10%	25V	
C424	1-162-970-11	CERAMIC CHIP	0.01uF	10%	25V	
C425	1-162-964-11	CERAMIC CHIP	0.001uF	10%	50V	
C426	1-162-964-11	CERAMIC CHIP	0.001uF	10%	50V	

http://www.xiaoyu163.com

http://www.xiaoyu163.com

Ref. No.	Part No.	Description	Remark
C427	1-162-964-11	CERAMIC CHIP 0.001uF 10% 50V	
C428	1-162-964-11	CERAMIC CHIP 0.001uF 10% 50V	
C429	1-162-970-11	CERAMIC CHIP 0.01uF 10% 25V	
C433	1-124-589-11	ELECT 47uF 20% 16V	
C434	1-162-970-11	CERAMIC CHIP 0.01uF 10% 25V	
C435	1-107-826-11	CERAMIC CHIP 0.1uF 10% 16V	
C436	1-162-970-11	CERAMIC CHIP 0.01uF 10% 25V	
C501	1-107-826-11	CERAMIC CHIP 0.1uF 10% 16V	
C502	1-165-727-31	ELECT 120uF 20% 16V	
C503	1-100-352-11	CERAMIC CHIP 1uF 20% 16V	
C504	1-107-826-11	CERAMIC CHIP 0.1uF 10% 16V	
C505	1-164-315-11	CERAMIC CHIP 470PF 5% 50V	
C506	1-164-315-11	CERAMIC CHIP 470PF 5% 50V	
C507	1-100-352-11	CERAMIC CHIP 1uF 20% 16V	
C508	1-162-965-11	CERAMIC CHIP 0.0015uF 10% 50V	
C509	1-162-917-11	CERAMIC CHIP 15PF 5% 50V	
C513	1-107-826-11	CERAMIC CHIP 0.1uF 10% 16V	
C514	1-126-924-11	ELECT 330uF 20% 10V	
C515	1-164-315-11	CERAMIC CHIP 470PF 5% 50V	
C516	1-107-826-11	CERAMIC CHIP 0.1uF 10% 16V	
C517	1-107-826-11	CERAMIC CHIP 0.1uF 10% 16V	
C518	1-126-934-11	ELECT 220uF 20% 16V	
C519	1-165-908-11	CERAMIC CHIP 1uF 10% 10V	
C520	1-124-584-00	ELECT 100uF 20% 10V	
C521	1-164-315-11	CERAMIC CHIP 470PF 5% 50V	
C523	1-104-665-11	ELECT 100uF 20% 25V	
C524	1-107-826-11	CERAMIC CHIP 0.1uF 10% 16V	
C701	1-124-584-00	ELECT 100uF 20% 10V	
C702	1-124-234-00	ELECT 22uF 20% 16V	
C703	1-124-233-11	ELECT 10uF 20% 16V	
C704	1-162-970-11	CERAMIC CHIP 0.01uF 10% 25V	
C705	1-162-970-11	CERAMIC CHIP 0.01uF 10% 25V	
C706	1-162-970-11	CERAMIC CHIP 0.01uF 10% 25V	
C707	1-162-970-11	CERAMIC CHIP 0.01uF 10% 25V	
C803	1-100-385-11	CERAMIC CHIP 0.47uF 25V	
C804	1-100-385-11	CERAMIC CHIP 0.47uF 25V	
C805	1-163-009-11	CERAMIC CHIP 0.001uF 10% 50V	
C806	1-163-009-11	CERAMIC CHIP 0.001uF 10% 50V	
C807	1-112-302-11	ELECT 3300uF 20% 16V	
C808	1-115-340-11	CERAMIC CHIP 0.22uF 10% 25V	
C810	1-115-340-11	CERAMIC CHIP 0.22uF 10% 25V	
C811	1-115-340-11	CERAMIC CHIP 0.22uF 10% 25V	
C812	1-165-908-11	CERAMIC CHIP 1uF 10% 10V	
C813	1-165-908-11	CERAMIC CHIP 1uF 10% 10V	
		< CONNECTOR >	
* CN401	1-564-710-11	PIN, CONNECTOR (SMALL TYPE) 8P	
CN403	1-820-622-21	SOCKET, CONNECTOR 20P	
CN501	1-564-705-11	PIN, CONNECTOR (SMALL TYPE) 3P	
CN701	1-820-611-11	CONNECTOR, BOARD TO BOARD 28P	
CN802	1-774-701-21	PIN, CONNECTOR 16P	
		< DIODE >	
D101	1-805-043-11	ABSORBER, CHIP SURGE	
D104	6-500-522-01	DIODE 10EDB40-TA1B2	
D105	6-500-522-01	DIODE 10EDB40-TA1B2	
D201	1-805-043-11	ABSORBER, CHIP SURGE	
D204	6-500-522-01	DIODE 10EDB40-TA1B2	
D205	6-500-522-01	DIODE 10EDB40-TA1B2	
D301	8-719-978-33	DIODE DTZ-TT11-6.8B	
D302	6-500-522-01	DIODE 10EDB40-TA1B2	

Ref. No.	Part No.	Description	Remark
D303	6-500-522-01	DIODE 10EDB40-TA1B2	
D304	6-500-522-01	DIODE 10EDB40-TA1B2	
D305	6-500-522-01	DIODE 10EDB40-TA1B2	
D306	6-501-817-01	DIODE MA2J1110GLS0	
D308	6-501-817-01	DIODE MA2J1110GLS0	
D309	6-501-817-01	DIODE MA2J1110GLS0	
D401	6-502-131-01	DIODE LRB751V-40T1G	
D403	6-501-743-01	DIODE MAZ8068GMLS0	
D404	6-501-743-01	DIODE MAZ8068GMLS0	
D410	6-501-743-01	DIODE MAZ8068GMLS0	
D502	6-501-817-01	DIODE MA2J1110GLS0	
D503	6-501-768-01	DIODE MAZ8120GMLS0	
D504	6-501-657-01	DIODE MA24D5000BS0	
D505	6-501-734-01	DIODE MAZ8056GMLS0	
D510	6-501-718-01	DIODE MAZ8039GLLS0	
D511	6-501-817-01	DIODE MA2J1110GLS0	
D512	6-501-817-01	DIODE MA2J1110GLS0	
D701	6-501-656-01	DIODE LBAT54ALT1G	
D806	6-501-747-01	DIODE MAZ8075GMLS0	
D807	6-501-782-01	DIODE MAZ8180GMLS0	
D809	6-501-782-01	DIODE MAZ8180GMLS0	
D810	6-501-782-01	DIODE MAZ8180GMLS0	
D811	6-501-782-01	DIODE MAZ8180GMLS0	
D812	6-501-571-01	DIODE 1N5404-C311-3	
		< FUSE >	
F501	1-576-416-21	FUSE, MICRO (1608 TYPE) 2A	
		< FERRITE BEAD >	
FB101	1-400-334-21	FERRITE, EMI (SMD) (1608)	
FB201	1-400-334-21	FERRITE, EMI (SMD) (1608)	
FB301	1-469-876-11	INDUCTOR, FERRITE BEAD	
FB701	1-469-844-11	INDUCTOR 2.2uH	
FB702	1-414-595-11	INDUCTOR, FERRITE BEAD	
FB705	1-414-228-11	INDUCTOR, FERRITE BEAD	
FB707	1-414-228-11	INDUCTOR, FERRITE BEAD	
		< FUSE >	
FU601	1-532-877-11	FUSE (BLADE TYPE) (AUTO FUSE) 10A	
		< IC >	
IC001	6-712-929-02	IC TEF6607T/V4/S470,518	
IC301	6-705-359-02	IC TDA8588AJ/N2/R1	
IC302	6-713-080-11	IC BD3447AFV-E2	
IC401	6-808-490-02	IC MB90F882PF-G-105E1	
IC402	6-711-653-01	IC S-1206B33-U3T1G	
IC403	6-709-458-01	IC XC61CN2802NR	
IC501	6-710-965-01	IC TPS40200DRG4	
IC502	8-759-586-19	IC TC7WH123FU(TE12R)	
IC503	6-709-213-01	IC NJM2387ADL3(TE2)	
		< JACK >	
J1	1-815-185-13	JACK (ANTENNA)	
J302	1-774-699-12	JACK, PIN 4P (REAR/SUB AUDIO OUT, FRONT AUDIO OUT)	
J801	1-566-822-41	JACK (REMOTE IN)	
		< JUMPER RESISTOR >	
JC101	1-216-295-11	SHORT CHIP 0	
JC102	1-216-296-11	SHORT CHIP 0	

http://www.xiaoyu163.com

http://www.xiaoyu163.com

MAIN

Ref. No.	Part No.	Description	Remark
JC103	1-216-296-11	SHORT CHIP 0	
JC104	1-216-296-11	SHORT CHIP 0	
JC105	1-216-295-11	SHORT CHIP 0	
JC106	1-216-864-11	SHORT CHIP 0	
JC107	1-216-295-11	SHORT CHIP 0	
JC108	1-216-864-11	SHORT CHIP 0	
JC109	1-216-864-11	SHORT CHIP 0	
JC110	1-216-864-11	SHORT CHIP 0	
JC111	1-216-296-11	SHORT CHIP 0	
JC112	1-216-296-11	SHORT CHIP 0	
JC113	1-216-296-11	SHORT CHIP 0	
JC114	1-216-296-11	SHORT CHIP 0	
JC115	1-216-864-11	SHORT CHIP 0	
JC116	1-216-296-11	SHORT CHIP 0	
JC117	1-216-295-11	SHORT CHIP 0	
JC118	1-216-295-11	SHORT CHIP 0	
JC119	1-216-296-11	SHORT CHIP 0	
JC120	1-216-296-11	SHORT CHIP 0	
JC121	1-216-295-11	SHORT CHIP 0	
JC122	1-216-295-11	SHORT CHIP 0	
JC123	1-216-296-11	SHORT CHIP 0	
JC124	1-216-296-11	SHORT CHIP 0	
JC125	1-216-864-11	SHORT CHIP 0	
JC126	1-216-295-11	SHORT CHIP 0	
JC127	1-216-295-11	SHORT CHIP 0	
JC128	1-216-295-11	SHORT CHIP 0	
JC129	1-216-295-11	SHORT CHIP 0	
JC130	1-216-864-11	SHORT CHIP 0	
JC131	1-216-296-11	SHORT CHIP 0	
JC132	1-216-296-11	SHORT CHIP 0	
JC133	1-216-296-11	SHORT CHIP 0	
		< COIL >	
L1	1-414-180-51	INDUCTOR 3.3uH	
L2	1-410-501-61	INDUCTOR 2.2uH	
L6	1-457-644-11	COIL (FM MIX)	
L7	1-481-285-51	INDUCTOR 560uH	
L8	1-481-285-51	INDUCTOR 560uH	
L301	1-469-844-11	INDUCTOR 2.2uH	
L501	1-411-595-21	COIL, CHOKE 47uH	
L502	1-406-718-21	COIL, CHOKE 68uH	
L503	1-412-525-31	INDUCTOR 10uH	
L801	1-456-617-11	COIL, CHOKE	
		< TRANSISTOR >	
Q102	6-551-856-01	TRANSISTOR LTC614TKFP8T146	
Q103	8-729-027-44	TRANSISTOR DTC114TKA-T146	
Q104	6-551-856-01	TRANSISTOR LTC614TKFP8T146	
Q202	6-551-856-01	TRANSISTOR LTC614TKFP8T146	
Q203	8-729-027-44	TRANSISTOR DTC114TKA-T146	
Q204	6-551-856-01	TRANSISTOR LTC614TKFP8T146	
Q303	8-729-027-43	TRANSISTOR DTC114EKA-T146	
Q304	8-729-027-23	TRANSISTOR DTA114EKA-T146	
Q305	8-729-027-23	TRANSISTOR DTA114EKA-T146	
Q401	8-729-027-43	TRANSISTOR DTC114EKA-T146	
Q402	8-729-027-23	TRANSISTOR DTA114EKA-T146	
Q501	8-729-027-43	TRANSISTOR DTC114EKA-T146	
Q502	6-551-923-01	FET TPC6108(T5RSONYF,M	
Q503	6-550-828-01	FET RSQ035P03TR	
Q504	8-729-027-43	TRANSISTOR DTC114EKA-T146	

Ref. No.	Part No.	Description	Remark
Q505	8-729-027-43	TRANSISTOR DTC114EKA-T146	
Q701	8-729-027-43	TRANSISTOR DTC114EKA-T146	
Q802	8-729-027-43	TRANSISTOR DTC114EKA-T146	
Q805	8-729-620-07	TRANSISTOR 2SC3052EF-T1-LEF	
Q807	8-729-027-43	TRANSISTOR DTC114EKA-T146	
Q808	8-729-620-07	TRANSISTOR 2SC3052EF-T1-LEF	
		< RESISTOR >	
R1	1-216-853-11	METAL CHIP 470K 5% 1/10W	
R2	1-216-853-11	METAL CHIP 470K 5% 1/10W	
R3	1-216-864-11	SHORT CHIP 0	
R4	1-216-864-11	SHORT CHIP 0	
R5	1-216-864-11	SHORT CHIP 0	
R6	1-216-843-11	METAL CHIP 68K 5% 1/10W	
R10	1-216-839-11	METAL CHIP 33K 5% 1/10W	
R11	1-216-829-11	METAL CHIP 4.7K 5% 1/10W	
R12	1-216-009-11	METAL CHIP 22 5% 1/10W	
R13	1-216-809-11	METAL CHIP 100 5% 1/10W	
R14	1-216-809-11	METAL CHIP 100 5% 1/10W	
R15	1-216-864-11	SHORT CHIP 0	
R16	1-216-864-11	SHORT CHIP 0	
R101	1-216-821-11	METAL CHIP 1K 5% 1/10W	
R103	1-216-817-11	METAL CHIP 470 5% 1/10W	
R104	1-216-834-11	METAL CHIP 12K 5% 1/10W	
R106	1-216-813-11	METAL CHIP 220 5% 1/10W	
R107	1-216-833-11	METAL CHIP 10K 5% 1/10W	
R112	1-216-821-11	METAL CHIP 1K 5% 1/10W	
R113	1-216-833-11	METAL CHIP 10K 5% 1/10W	
R116	1-216-813-11	METAL CHIP 220 5% 1/10W	
R117	1-216-833-11	METAL CHIP 10K 5% 1/10W	
R201	1-216-821-11	METAL CHIP 1K 5% 1/10W	
R203	1-216-817-11	METAL CHIP 470 5% 1/10W	
R204	1-216-834-11	METAL CHIP 12K 5% 1/10W	
R206	1-216-813-11	METAL CHIP 220 5% 1/10W	
R207	1-216-833-11	METAL CHIP 10K 5% 1/10W	
R212	1-216-821-11	METAL CHIP 1K 5% 1/10W	
R213	1-216-833-11	METAL CHIP 10K 5% 1/10W	
R216	1-216-813-11	METAL CHIP 220 5% 1/10W	
R217	1-216-833-11	METAL CHIP 10K 5% 1/10W	
R302	1-216-825-11	METAL CHIP 2.2K 5% 1/10W	
R303	1-216-823-11	METAL CHIP 1.5K 5% 1/10W	
R304	1-216-295-11	SHORT CHIP 0	
R306	1-216-841-11	METAL CHIP 47K 5% 1/10W	
R308	1-216-811-11	METAL CHIP 150 5% 1/10W	
R309	1-216-797-11	METAL CHIP 10 5% 1/10W	
R311	1-216-841-11	METAL CHIP 47K 5% 1/10W	
R313	1-216-805-11	METAL CHIP 47 5% 1/10W	
R401	1-216-845-11	METAL CHIP 100K 5% 1/10W	
R402	1-216-845-11	METAL CHIP 100K 5% 1/10W	
R404	1-216-864-11	SHORT CHIP 0	
R405	1-216-849-11	METAL CHIP 220K 5% 1/10W	
R406	1-216-845-11	METAL CHIP 100K 5% 1/10W	
R407	1-216-825-11	METAL CHIP 2.2K 5% 1/10W	
R408	1-216-845-11	METAL CHIP 100K 5% 1/10W	
R409	1-216-809-11	METAL CHIP 100 5% 1/10W	
R410	1-216-817-11	METAL CHIP 470 5% 1/10W	
R411	1-216-845-11	METAL CHIP 100K 5% 1/10W	
R414	1-216-845-11	METAL CHIP 100K 5% 1/10W	
R415	1-216-845-11	METAL CHIP 100K 5% 1/10W	
R417	1-216-845-11	METAL CHIP 100K 5% 1/10W	

http://www.xiaoyu163.com

http://www.xiaoyu163.com

Ref. No.	Part No.	Description			Remark
R419	1-216-845-11	METAL CHIP	100K	5%	1/10W
R420	1-216-809-11	METAL CHIP	100	5%	1/10W
R421	1-216-833-11	METAL CHIP	10K	5%	1/10W
R422	1-216-809-11	METAL CHIP	100	5%	1/10W
R423	1-216-809-11	METAL CHIP	100	5%	1/10W
R424	1-216-833-11	METAL CHIP	10K	5%	1/10W
R426	1-216-825-11	METAL CHIP	2.2K	5%	1/10W
R427	1-216-825-11	METAL CHIP	2.2K	5%	1/10W
R428	1-216-845-11	METAL CHIP	100K	5%	1/10W
R430	1-216-845-11	METAL CHIP	100K	5%	1/10W
R431	1-216-845-11	METAL CHIP	100K	5%	1/10W
R432	1-216-845-11	METAL CHIP	100K	5%	1/10W
R433	1-216-845-11	METAL CHIP	100K	5%	1/10W
R434	1-216-845-11	METAL CHIP	100K	5%	1/10W
R435	1-216-809-11	METAL CHIP	100	5%	1/10W
R436	1-216-809-11	METAL CHIP	100	5%	1/10W
R437	1-216-809-11	METAL CHIP	100	5%	1/10W
R438	1-216-809-11	METAL CHIP	100	5%	1/10W
R439	1-218-871-11	METAL CHIP	10K	0.5%	1/10W
R440	1-218-871-11	METAL CHIP	10K	0.5%	1/10W
R441	1-218-871-11	METAL CHIP	10K	0.5%	1/10W
R442	1-216-825-11	METAL CHIP	2.2K	5%	1/10W
R443	1-216-825-11	METAL CHIP	2.2K	5%	1/10W
R444	1-216-825-11	METAL CHIP	2.2K	5%	1/10W
R445	1-216-845-11	METAL CHIP	100K	5%	1/10W
R446	1-216-845-11	METAL CHIP	100K	5%	1/10W
R447	1-216-845-11	METAL CHIP	100K	5%	1/10W
R448	1-216-845-11	METAL CHIP	100K	5%	1/10W
R452	1-216-845-11	METAL CHIP	100K	5%	1/10W
R454	1-216-845-11	METAL CHIP	100K	5%	1/10W
R455	1-216-809-11	METAL CHIP	100	5%	1/10W
R456	1-216-833-11	METAL CHIP	10K	5%	1/10W
R459	1-216-809-11	METAL CHIP	100	5%	1/10W
R460	1-216-809-11	METAL CHIP	100	5%	1/10W
R461	1-216-809-11	METAL CHIP	100	5%	1/10W
R462	1-216-809-11	METAL CHIP	100	5%	1/10W
R463	1-216-809-11	METAL CHIP	100	5%	1/10W
R464	1-216-809-11	METAL CHIP	100	5%	1/10W
R465	1-216-864-11	SHORT CHIP	0		
R466	1-216-864-11	SHORT CHIP	0		
R467	1-216-864-11	SHORT CHIP	0		
R468	1-216-845-11	METAL CHIP	100K	5%	1/10W
R501	1-216-842-11	METAL CHIP	56K	5%	1/10W
R502	1-216-842-11	METAL CHIP	56K	5%	1/10W
R503	1-216-834-11	METAL CHIP	12K	5%	1/10W
R504	1-216-843-11	METAL CHIP	68K	5%	1/10W
R505	1-216-821-11	METAL CHIP	1K	5%	1/10W
R508	1-216-296-11	SHORT CHIP	0		
R510	1-216-845-11	METAL CHIP	100K	5%	1/10W
R511	1-216-823-11	METAL CHIP	1.5K	5%	1/10W
R512	1-216-864-11	SHORT CHIP	0		
R513	1-216-833-11	METAL CHIP	10K	5%	1/10W
R514	1-216-851-11	METAL CHIP	330K	5%	1/10W
R515	1-216-833-11	METAL CHIP	10K	5%	1/10W
R516	1-218-895-11	METAL CHIP	100K	0.5%	1/10W
R517	1-218-879-11	METAL CHIP	22K	0.5%	1/10W
R518	1-218-889-11	METAL CHIP	56K	0.5%	1/10W
R519	1-216-821-11	METAL CHIP	1K	5%	1/10W
R520	1-218-871-11	METAL CHIP	10K	0.5%	1/10W
R521	1-218-859-11	METAL CHIP	3.3K	0.5%	1/10W
R523	1-216-821-11	METAL CHIP	1K	5%	1/10W
R524	1-216-821-11	METAL CHIP	1K	5%	1/10W
R525	1-216-821-11	METAL CHIP	1K	5%	1/10W
R526	1-216-797-11	METAL CHIP	10	5%	1/10W
R527	1-216-797-11	METAL CHIP	10	5%	1/10W
R701	1-216-864-11	SHORT CHIP	0		
R703	1-216-845-11	METAL CHIP	100K	5%	1/10W
R704	1-216-864-11	SHORT CHIP	0		
R706	1-216-809-11	METAL CHIP	100	5%	1/10W
R707	1-216-809-11	METAL CHIP	100	5%	1/10W
R709	1-216-809-11	METAL CHIP	100	5%	1/10W
R710	1-216-845-11	METAL CHIP	100K	5%	1/10W
R712	1-216-864-11	SHORT CHIP	0		
R713	1-216-845-11	METAL CHIP	100K	5%	1/10W
R714	1-216-864-11	SHORT CHIP	0		
R717	1-216-864-11	SHORT CHIP	0		
R801	1-216-864-11	SHORT CHIP	0		
R802	1-216-864-11	SHORT CHIP	0		
R815	1-216-821-11	METAL CHIP	1K	5%	1/10W
R816	1-216-821-11	METAL CHIP	1K	5%	1/10W
R817	1-216-841-11	METAL CHIP	47K	5%	1/10W
R818	1-216-829-11	METAL CHIP	4.7K	5%	1/10W
R819	1-216-841-11	METAL CHIP	47K	5%	1/10W
R823	1-249-425-11	CARBON	4.7K	5%	1/4W
R825	1-216-864-11	SHORT CHIP	0		
R826	1-216-864-11	SHORT CHIP	0		
R827	1-216-849-11	METAL CHIP	220K	5%	1/10W
R829	1-216-864-11	SHORT CHIP	0		
R830	1-216-864-11	SHORT CHIP	0		
		< SWITCH >			
S401	1-786-826-11	SWITCH, TACTILE (RESET)			
S402	1-571-478-11	SWITCH, SLIDE (FREQUENCY SELECT)			
		< SURGE ABSORBER >			
VR1	1-805-043-11	ABSORBER, CHIP SURGE			
		< VIBRATOR >			
X1	1-814-161-11	QUARTZ CRYSTAL UNIT (4MHz)			
X401	1-814-207-21	VIBRATOR, CERAMIC (7.92MHz)			
X402	1-813-202-11	VIBRATOR, CRYSTAL (32.768kHz)			

****

	A-1555-002-A	SERVO BOARD, COMPLETE			
		**********			

****

		MISCELLANEOUS			
		**********			
6	1-776-527-11	CORD (WITH CONNECTOR) (ISO) (POWER) (GT480US:AR)			
6	1-833-762-11	CONNECTION CORD FOR AUTOMOBILE (POWER) (for Maruti Suzuki:Gasoline car) (GT48UM)			
6	1-833-974-31	CONNECTION CORD FOR AUTOMOBILE (POWER) (GT480U/GT480US:E,MX/GT484US)			
6	1-834-307-11	CONNECTION CORD FOR AUTOMOBILE (POWER) (for Maruti Suzuki:Diesel car) (GT48UM)			
⚠ 103	X-2149-672-1	SERVICE ASSY, OP (DAX-25A)			

****

http://www.xiaoyu163.com

http://www.xiaoyu163.com

Ref. No.	Part No.	Description	Remark
		ACCESSORIES **********	
	1-479-077-13	REMOTE COMMANDER (RM-X151)	
	2-548-729-01	LID, BATTERY CASE (for RM-X151)	
	4-109-735-31	MANUAL, INSTRUCTION (ENGLISH,SPANISH, PERSIAN)	
	4-109-736-31	MANUAL, INSTRUCTION, INSTALL (ENGLISH, SPANISH,PERSIAN) (EXCEPT GT480US:AR)	
	4-109-736-51	MANUAL, INSTRUCTION, INSTALL (ENGLISH, SPANISH) (GT480US:AR)	
	X-2186-697-1	CASE ASSY (for FRONT PANEL)	
**********			
		PARTS FOR INSTALLATION AND CONNECTIONS **********	
151	X-2179-430-2	FRAME ASSY, FITTING	
152	1-465-459-41	ADAPTOR, ANTENNA (GT480US:AR)	
153	1-776-527-11	CORD (WITH CONNECTOR) (ISO) (POWER)	(GT480US:AR)
154	1-833-762-11	CONNECTION CORD FOR AUTOMOBILE (POWER) (for Maruti Suzuki:Gasoline car)	(GT48UM)
154	1-833-974-31	CONNECTION CORD FOR AUTOMOBILE (POWER) (GT480U/GT480US:E,MX/GT484US)	
154	1-834-307-11	CONNECTION CORD FOR AUTOMOBILE (POWER) (for Maruti Suzuki:Diesel car)	(GT48UM)
155	3-876-674-01	KEY (FRAME)	
156	3-398-492-01	COLLAR	
157	A-1082-993-A	SCREW ASSY (BS4), FITTING	
158	3-259-776-01	SCREW (+K 5X8 TP)	

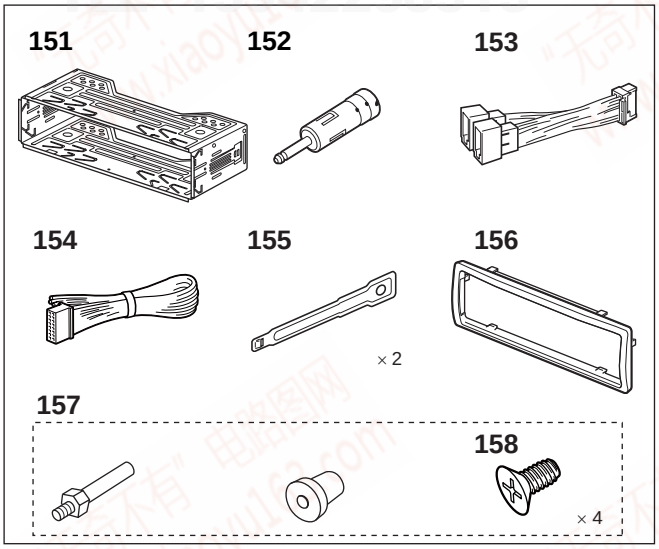

http://www.xiaoyu163.com

http://www.xiaoyu163.com

MEMO

QQ 376315150 892498299
TEL 13942296513 QQ 376315150 892498299
www. xiaoyu163. com

http://www.xiaoyu163.com

http://www.xiaoyu163.com

REVISION HISTORY

Checking the version allows you to jump to the revised page.
Also, clicking the version at the top of the revised page allows you to jump to the next revised page.

Ver.	Date	Description of Revision
1.0	2008.11	New

http://www.xiaoyu163.com