W

EDI Single-1 to 12 Amperes Commercial Grade Bridges

PRV/Leg	50V	100V	200V	400V	600V	800V	1000V
1W SERIES 1 Amp	1W005	1W1	1W2	1W4	1W6	1W8	1W10
W SERIES 1.5 Amp	W005	W1	W2	W4	W6	W8	W10
2W SERIES 2 Amp	2W005	2W1	2W2	2W4	2W6	2W8	2W10

Electrical Characteristics	1W	W	2W	UNIT
at T_A = 25º C Unless Otherwise Specified	Series	Series	Series	
Max. DC Reverse Current @ PRV I_R	10	10	10	µA
Max Peak Surge Current, I_{FSM} (8.3ms)	30	50	5030	Amp
Package Style	RB15	RB15	WOB	

DIAGRAMS

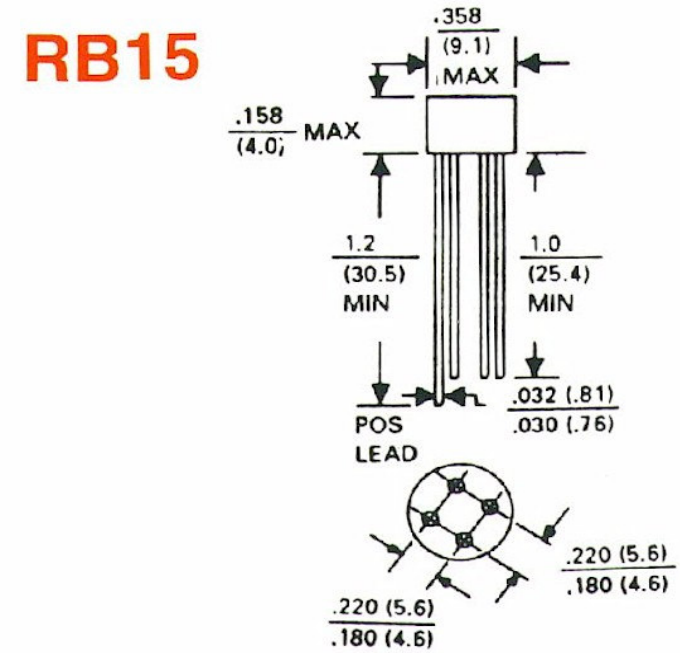

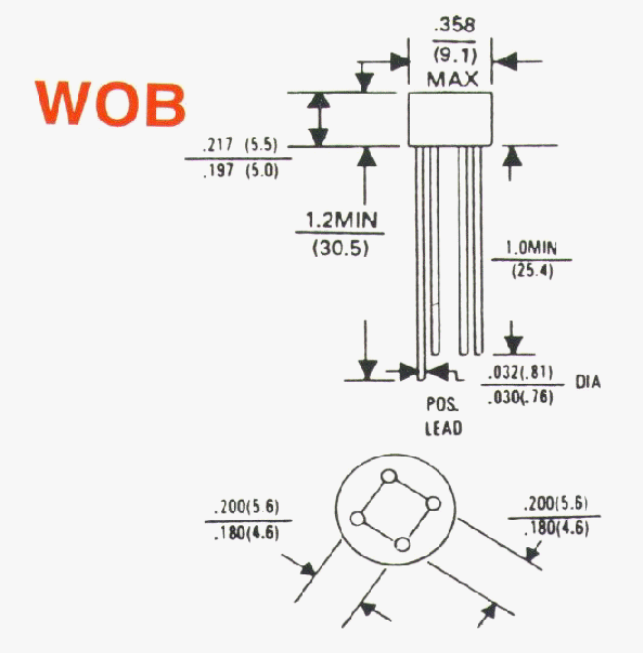

EDI reserves the right to change these specifications at any time without notice.

ELECTRONIC DEVICES, INC. DESIGNER AND MANUFACTURERS OF SOLID STATE DEVICES SINCE 1951.

- 21 GRAYOAKS AVENUE YONKERS, NEW YORK, 10710
- 914-965-4400 1-800-678-0828
- FAX: 914-965-5531
- e-mail: sales@EDIdiodes.com web site: www.EDIdiodes.com