Silicon PNP Epitaxial Planar Type

2SB1174

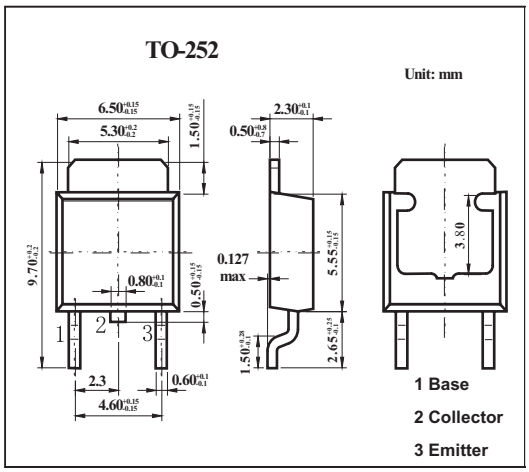

Features

- Low collector-emitter saturation voltage $V_{CE(sat)}$.
- Satisfactory linearity of forward current transfer ratio h_{FE}.
- Large collector current I_C.

Absolute Maximum Ratings Ta = 25℃

Parameter	Symbol	Rating	Unit
Collector-base voltage	V_{CBO}	-130	V
Collector-emitter voltage	V_{CEO}	-80	V
Emitter-base voltage	V_{EBO}	-7	V
Collector current	I_C	-3	A
Peak collector current	I_{CP}	-6	A
Collector power dissipation	P_C	1.3	W
Junction temperature	T_j	150	℃
Storage temperature	T_{stg}	-55 to +150	℃

Electrical Characteristics Ta = 25℃

Parameter	Symbol	Testconditons	Min	Typ	Max	Unit
Collector-emitter voltage	V_{CEO}	I_C = -10 mA, I_B = 0	-80			V
Collector-emitter cutoff curent	I_{CEO}	V_{CE} = -100 V, I_B = 0			-10	μA
Emitter-base cutoff current	I_{EBO}	V_{EB} = -5 V, I_C = 0			-50	μA
Forward current transfer ratio	h_{FE}	V_{CE} = -2 V, I_C = -0.5 A	90		260	
		V_{CE} = -2 V, I_C = -0.1 A	45			
Collector-emitter saturation voltage	$V_{CE(sat)}$	I_C = -2 A, I_B = -0.1 A			-0.5	V
Base-emitter saturation voltage	$V_{BE(sat)}$	I_C = -2 A, I_B = -0.1 A			-1.5	V
Transition frequency	f_T	V_{CE} = -10 V, I_C = -0.5 A , f = 10 MHz		30		MHz
Turn-on time	t_{on}	I_C = -0.5 A, I_{B1} = -50 mA, I_{B2} = 50 mA, V_{CC} = -50 V		0.3		μs
Storage time	t_{stg}			1.1		μs
Fall time	t_f			0.3		μs

h_{FE} Classification

Rank	Q	P
h_{FE}	90～180	130～260

Free Datasheet http://www.datasheet4u.com/