Silicon PNP Epitaxial Planar Type

2SB1643

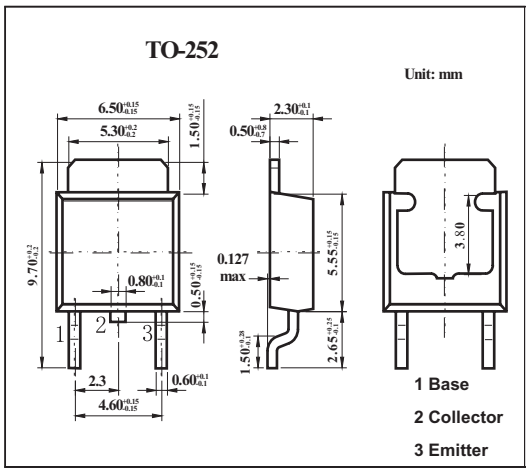

Features

- High collector to emitter V_{CEO}.
- High collector power dissipation P_C.

Absolute Maximum Ratings Ta = 25℃

Parameter	Symbol	Rating	Unit
Collector-base voltage	V_{CBO}	-60	V
Collector-emitter voltage	V_{CEO}	-60	V
Emitter-base voltage	V_{EBO}	-6	V
Collector current	I_C	-3	A
Peak collector current	I_{CP}	-6	A
Base current	I_B	-1	A
Collector power dissipation T_C = 25℃	P_C	40	W
Ta = 25℃		1.3	W
Junction temperature	T_j	150	℃
Storage temperature	T_{stg}	-55 to +150	℃

Electrical Characteristics Ta = 25℃

Parameter	Symbol	Testconditons	Min	Typ	Max	Unit
Collector-base cutoff curent	I_{CBO}	V_{CB} = -60 V, I_E = 0			-100	μA
Collector-emitter cutoff curent	I_{CEO}	V_{EB} = -40 V, I_C = 0			-100	μA
Emitter-base cutoff current	I_{EBO}	V_{EB} = -6 V, I_C = 0			-100	μA
Collector-emitter voltage	V_{CEO}	I_C = -25 mA, I_B = 0	-60			V
Forward current transfer ratio	h_{FE}	V_{CE} = -4 V, I_C = -0.5 A	300		700	
Collector-emitter saturation voltage	$V_{CE(sat)}$	I_C = -2 A, I_B = -0.05 A			-1	V
Transition frequency	f_T	V_{CE} = -12 V, I_C = -0.2 A , f = 10 MHz		30		MHz

h_{FE} Classification

Rank	Q	P
h_{FE}	300～500	400～700

Free Datasheet http://www.datasheet4u.com/