Silicon N-Channel MOSFET

2SK1838S

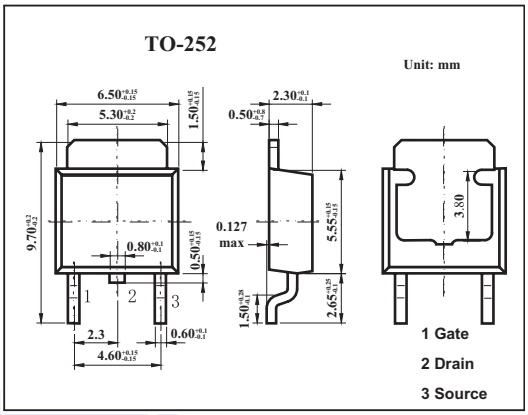

■ Features

- Low on-resistance
- High speed switching
- Low drive current
- No secondary breakdown
- Suitable for switchingregulator, DC-DC converter

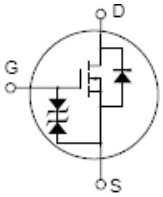

■ Absolute Maximum Ratings Ta = 25℃

Parameter	Symbol	Rating	Unit
Drain to source voltage	V_{DSS}	250	V
Gate to source voltage	V_{GSS}	±30	V
Drain current	I_D	1	A
Power dissipation	P_D	10	W
Channel temperature	T_{ch}	150	℃
Storage temperature	T_{stg}	-55 to +150	℃

* PW≤ 10ms, duty cycle ≤ 5%

■ Electrical Characteristics Ta = 25℃

Parameter	Symbol	Testconditons	Min	Typ	Max	Unit
Drain source breakdown voltage	V_{DSS}	I_D=10mA,V_{GS}=0	250			V
Gate to source breadown voltage	V_{GSS}	I_D=±100 μA,V_{DS}=0	±30			V
Drain cut-off current	I_{DSS}	V_{DS}=200V,V_{GS}=0			100	μA
Gate leakage current	I_{GSS}	V_{GS}=±25V,V_{DS}=0			±10	μA
Forward transfer admittance	| Y_{fs} |	V_{DS}=10V,I_D=0.5A	0.3	0.5		S
Drain to source on-state resistance	$R_{DS(on)}$	V_{GS}=10V,I_D=0.5A		5.5	8.0	Ω
Input capacitance	C_{iss}	V_{DS}=10V,V_{GS}=0,f=1MHZ		60		pF
Output capacitance	C_{oss}			30		pF
Reverse transfer capacitance	C_{rss}			5		pF
Turn-on delay time	$t_{d(on)}$	I_D=0.5A,$V_{GS(on)}$=10V,R_L=60 Ω		5		ns
Rise time	t_r			6		ns
Turn-off delay time	$t_{d(off)}$			10		ns
Fall time	t_f			4.5		ns