Triode *Type ACM 3*

VIDEO FREQUENCY MODULATOR AND CATHODE FOLLOWER

General. A forced-air-cooled triode fitted with an indirectly heated oxide coated cathode, designed for use as a video frequency modulator and cathode follower. The ACM 3 is not suitable for positive grid drive.

Cooling. The anode requires cooling by air blast. The volume of air necessary is about 60 cu. ft. per minute at a pressure equal to a 1-in. head of water. The grid seal also requires to be cooled by air and the volume of air necessary is about 6 cu. ft. per minute at a pressure equal to a 1-in. head of water. All cooling supplies must be in operation before the application of any supply voltages, and must continue until all voltages have been removed.

Mounting. The valve must be mounted vertically with the cathode end uppermost. Rigid connections must be made to the anode only.

APPROXIMATE DATA

V_f	6	V
I_f	17	A
$V_{a\ (max)}$	2	kV
$p_{a\ (max)}$	2	kW
$I_{k\ (pk)\ (max)}$	2	A
μ	14	
g_m (taken at $\frac{1}{2} I_{k\ (pk)}$)	27	mA/V
$c_{a\text{-}g_1}$	15	pF
$c_{a\text{-}k}$	5	pF
$c_{g_1\text{-}k}$	20	pF

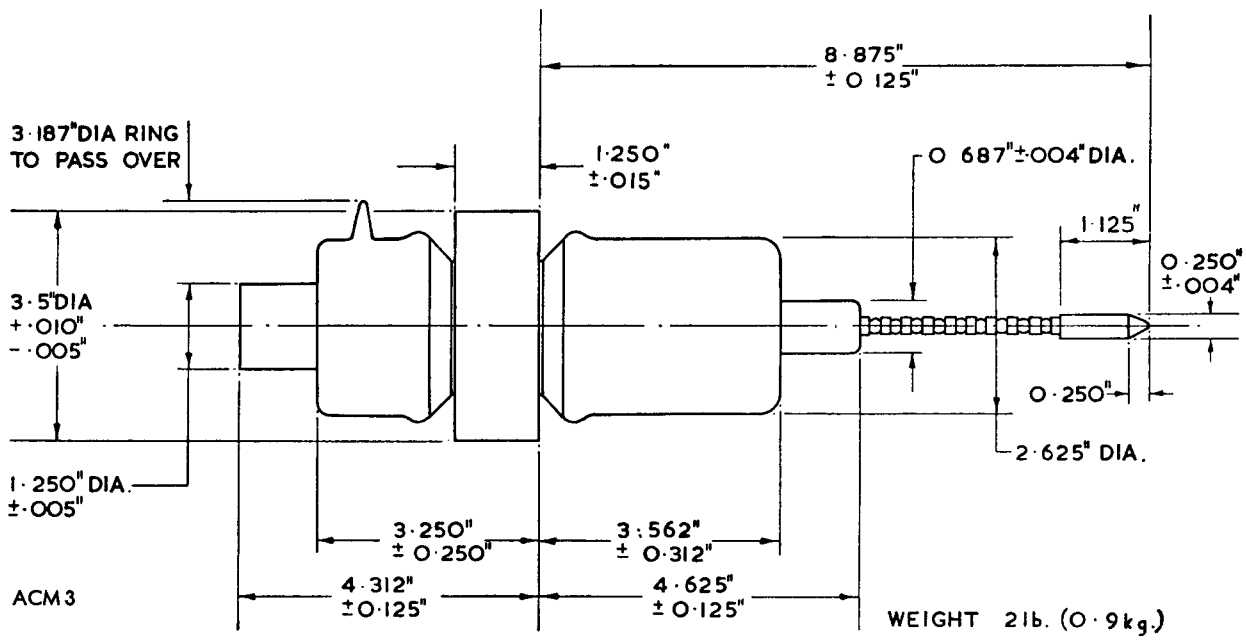

MARCONI'S WIRELESS TELEGRAPH COMPANY LIMITED

Head Office: Marconi House, Chelmsford, England. Telephone: Chelmsford 3221. Telegraphic Address: Expanse, Chelmsford

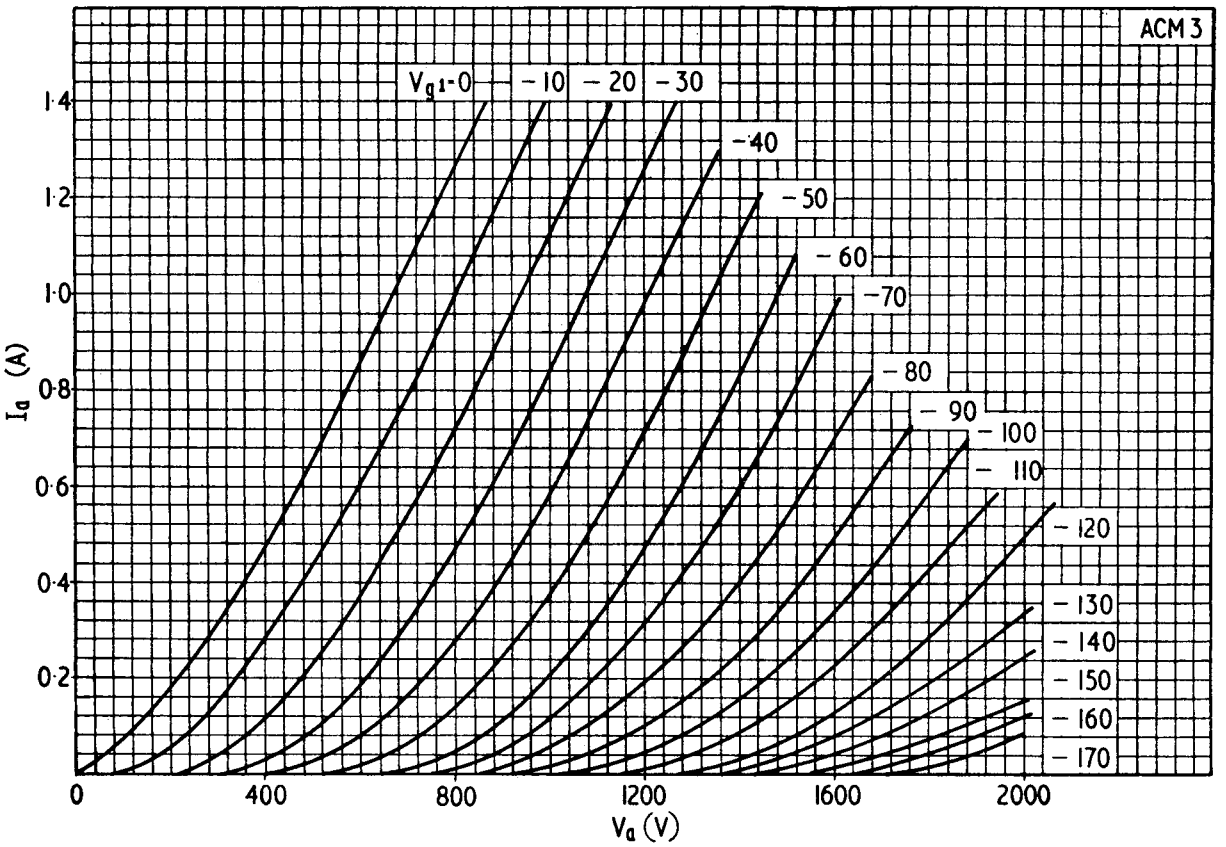

PRINTED IN ENGLAND