AF-08048A

•80 x 48 dots 1/48 Duty

FEATURE

1.Construction : LCD panel and COF.

2.Display type : FSTN, Transflectiv

3. Controller : UC1606

4. Interface for 8080 series family MPU

5.Extend temperature type.

液晶之友 电话: 020-33819057
Http://www.lcdfriends.com

BLOCK DIAGRAM & POWER SUPPLY

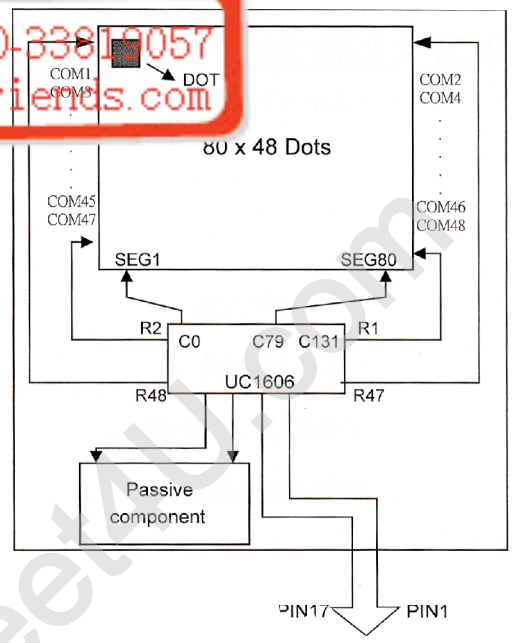

ELECTRICAL CHARACTERISTICS

Parameter	Symbol	Condition	Typ.Value	Unit.
LCD Driving Voltage	VLCD	25°C	9.5	V
Supply Current	IDD	VDD=2.8V	100	uA

INTERFACE

1	2	3	4	5	6	7	8	9	10
NC	/CS	/RST	CD	/WR	/RD	D0	D1	D2	D3
11	12	13	14	15	16	17			
D4	D5	D6	D7	VDD	VSS	NC.			

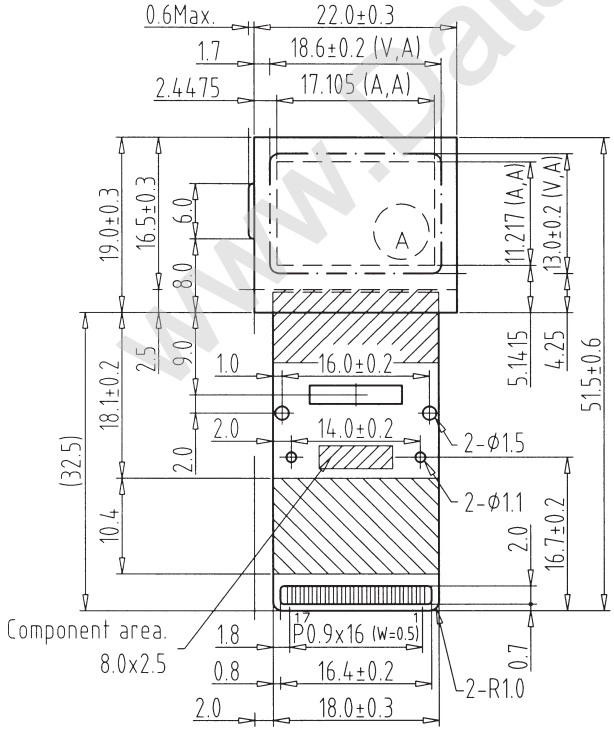

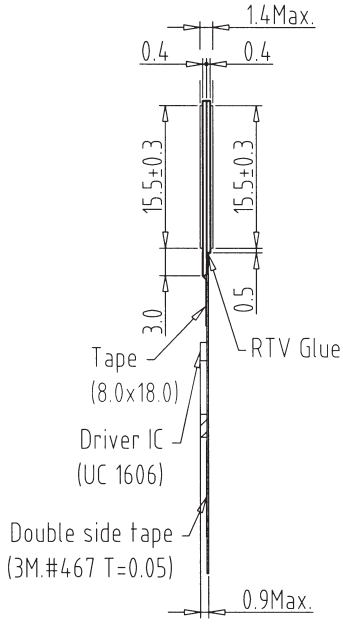

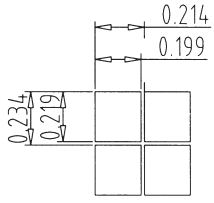

A BLOCK

www.DataSheet4U.com