AO-06464A

•64 x 64 dots 1/65 Duty

FEATURE

1.Construction : FSTN LCD panel, COG and FPC.

2.Driver : SSD1815.

3.+3.0 single power i ut.

4.Extended temperat e type

液晶之友 电话：020-33819057
Http://www.lcdfriends.com

ELECTRICAL CHARACTERISTICS

Parameter	Symbol	Condition	Typ.Value	Unit.
LCD Driving Voltage	V0-V5	25°C	9.5	V
Supply Current	IDD	VDD=3.3V	100	uA

INTERFACE

1	2	3	4	5	6	7	8	9	10	11	12
/CS	/RES	A0	WR	/RD	D0	D1	D2	D3	D4	D5	D6
13	14	15	16	17	18	19	20	21	22	23	24
D7	VDD	VSS	VOUT	CAP3-	CAP1+	CAP1-	CAP2-	CAP2+	V1	V2	V3
25	26										
V4	V5										

BLOCK DIAGRAM

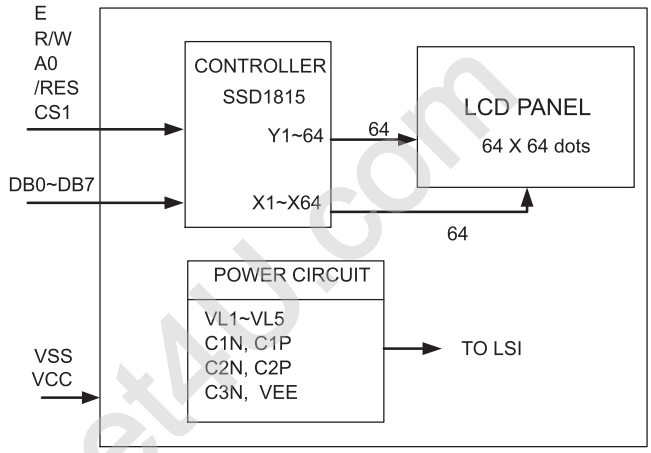

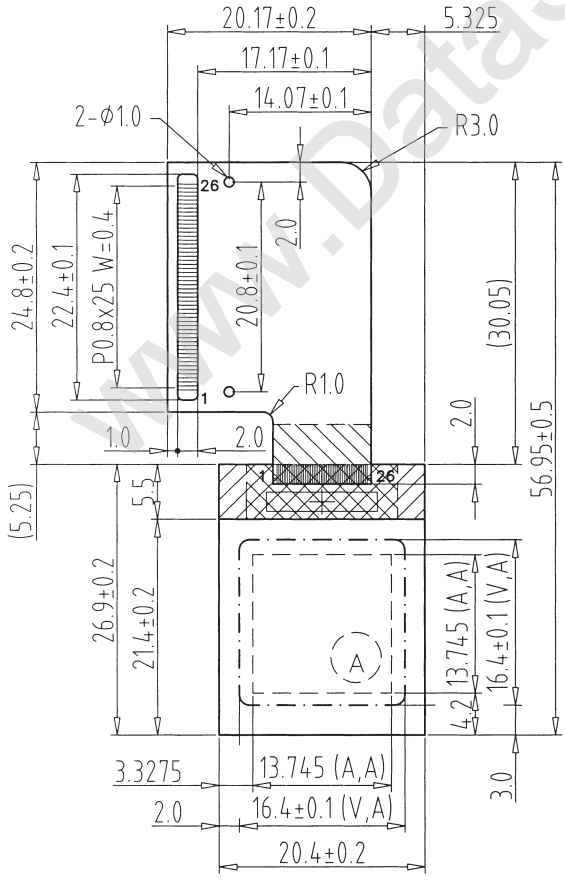

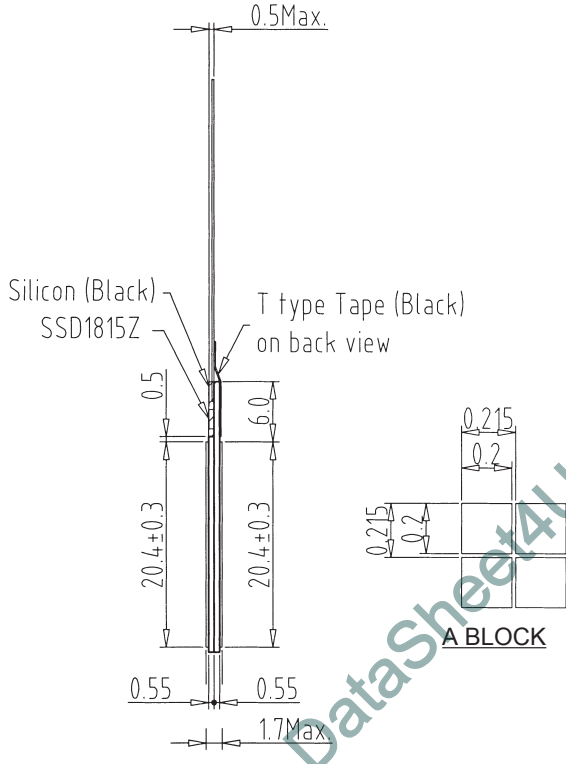

www.DataSheet4U.com