VDSL Hybrid Module

APC77128

FEATURES

- Designed for Broadcom BCM6315 and BCM6020 VDSL chipset
- Symmetric CO design
- Includes 2 wire line interface hybrid, TX and RX filters and AGC control
- 1500V line isolation transformer
- Minimum surface mount footprint for increased line card density

www.DataSheet4U.com

ELECTRICAL SPECIFICATIONS AT 25˚C

Description	Passband Freq	Stopband Freq	Attenuation min	Impedance
VDSL LPF (TX)	DC to 2.5 MHz	3 MHz >	50dB	100R
VDSL HPF (RX)	2.8MHz >	DC to 2.5MHz	50dB	100R

BLOCK DIAGRAM

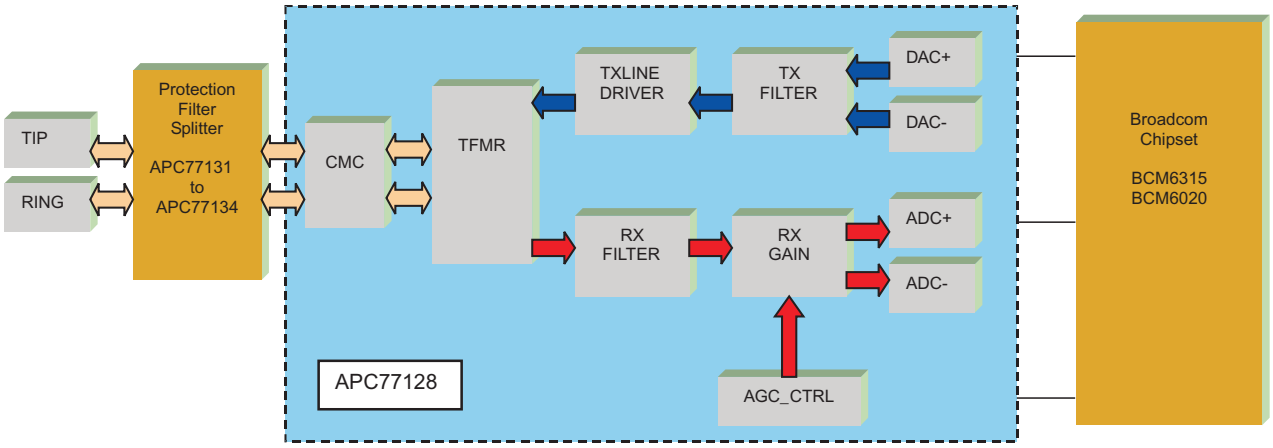

©2003 Bel Fuse Inc. Specifications subject to change without notice. 05.20.03

www.DataSheet4U.com

Bel Fuse Inc. 206 Van Vorst Street, Jersey City, NJ 07302 • Tel 201-432-0463 • Fax 201-432-9542 • www.belfuse.com

VDSL Hybrid Module

APC77128

FREQUENCY ALLOCATION

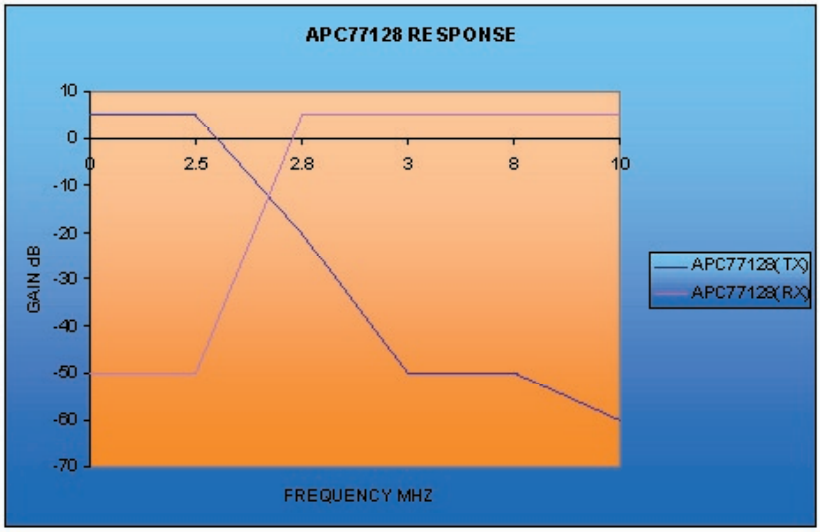

www.DataSheet4U.com

MECHANICAL

Top View

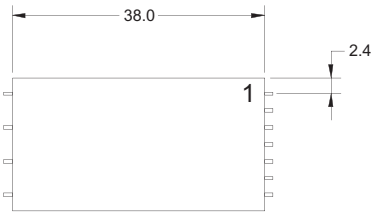

End View

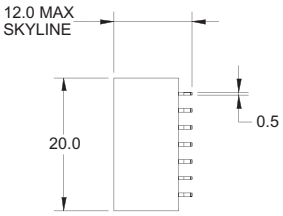

Side View

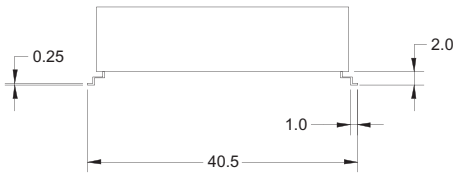

Pin No.	Signal
1	DACP
2	DACN
3	0V
4	AGC_CTRL
5	+12V
6	ADCP
7	ADCN
8	N/C
9	RING
10	TIP
11	N/C

Recommended PCB Layout

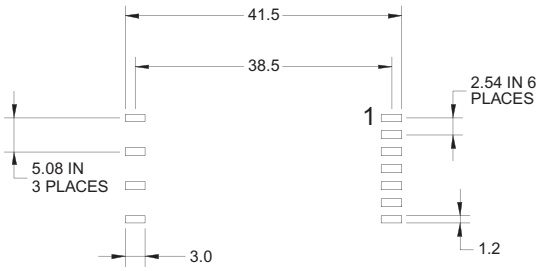

©2003 Bel Fuse Inc. Specifications subject to change without notice. 05.20.03

CORPORATE

Bel Fuse Inc.
206 Van Vorst Street
Jersey City, NJ 07302
Tel 201-432-0463
Fax 201-432-9542
www.belfuse.com

FAR EAST

Bel Fuse Ltd.
8F / 8 Luk Hop Street
San Po Kong
Kowloon, Hong Kong
Tel 852-2328-5515
Fax 852-2352-3706
www.belfuse.com

EUROPE

Bel Stewart Connector
45/46 Riverside
Medway City Estate
Rochester, Kent ME2 4DP U.K.
Tel 44-1634-722890
Fax 44-1634-716677
www.belfuse.com

www.DataSheet4U.com