Pioneer

Service Manual

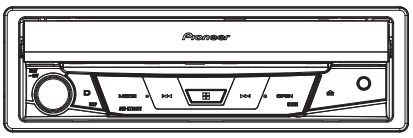

AVH-X7700BT/XNUC

ORDER NO.
CRT5646

DVD RDS AV RECEIVER

AVH-X7700BT/XNUC
AVH-X7700BT/XNEW5
AVH-X7700BT/XNUW5
AVH-X7750BT/XNRC
AVH-X7750BT/XNRD
AVH-X7750TV/XNRD
AVH-X7750BT/XNRI

This service manual should be used together with the following manual(s):

Model No.	Order No.	Mech.Module	Remarks
CX-3268	CRT4534	MS7	DVD Mech. Module : Circuit Descriptions, Mech. Descriptions, Disassembly
CX-3310	CRT5669	MS7.2	DVD Mech. Module : Diagnosis Flowchart

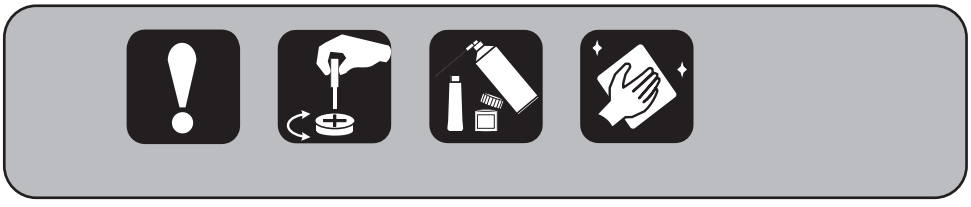

PIONEER CORPORATION 1-1, Shin-ogura, Saiwai-ku, Kawasaki-shi, Kanagawa 212-0031, Japan
PIONEER ELECTRONICS (USA) INC. P.O. Box 1760, Long Beach, CA 90801-1760, U.S.A.
PIONEER EUROPE NV Haven 1087, Keetberglaan 1, 9120 Melsele, Belgium
PIONEER ELECTRONICS ASIACENTRE PTE. LTD. 253 Alexandra Road, #04-01, Singapore 159936
ⓒ**PIONEER CORPORATION 2014**

K-ZZZ NOV. 2014 Printed in Japan

SAFETY INFORMATION

CAUTION

This service manual is intended for qualified service technicians; it is not meant for the casual do-it-yourselfer.
Qualified technicians have the necessary test equipment and tools, and have been trained to properly and safely repair complex products such as those covered by this manual.
Improperly performed repairs can adversely affect the safety and reliability of the product and may void the warranty.
If you are not qualified to perform the repair of this product properly and safely, you should not risk trying to do so and refer the repair to a qualified service technician.

WARNING

This product may contain a chemical known to the State of California to cause cancer, or birth defects or other reproductive harm.
Health & Safety Code Section 25249.6 - Proposition 65

Where in a manufacturer's service documentation, for example in circuit diagrams or lists of components, a symbol is used to indicate that a specific component shall be replaced only by the component specified in that documentation for safety reasons, the following symbol shall be used:

⚠

● **Safety Precautions for those who Service this Unit.**
When checking or adjusting the emitting power of the laser diode exercise caution in order to get safe, reliable results.

Caution:

1. **During repair or tests, minimum distance of 13 cm from the focus lens must be kept.**
2. **During repair or tests, do not view laser beam for 10 seconds or longer.**

CAUTION:
USE OF CONTROLS OR ADJUSTMENTS OR PERFORMANCE OF PROCEDURES OTHER THAN THOSE SPECIFIED HEREIN MAY RESULT IN HAZARDOUS RADIATION EXPOSURE.

CAUTION
This product is a class 1 laser product classified under the Safety of laser products, IEC 60825-1:2007, and contains a class 1M laser module. To ensure continued safety, do not remove any covers or attempt to gain access to the inside of the product. Refer all servicing to qualified personnel.

CLASS 1 LASER PRODUCT

CAUTION—CLASS 1M INVISIBLE LASER RADIATION WHEN OPEN, DO NOT VIEW DIRECTLY WITH OPTICAL INSTRUMENTS.

WARNING!

The AEL (accessible emission level)of the laser power output is less than CLASS 1 but the laser component is capable of emitting radiation exceeding the limit for CLASS 1.
A specially instructed person should do servicing operation of the apparatus.

Laser diode characteristics
Wave length:
DVD:660 nm to 670 nm
CD:780 nm to 800 nm
Focus lens on Maximum output:
CD:6.26 mW(Emitting period :9 sec.)
DVD:1.27 mW (Emitting period : unlimited)

Additional Laser Caution

Transistors Q1103 and Q1104 in PCB drive the laser diodes for DVD and CD respectively. When Q1103 or Q1104 is shorted between their terminals, the laser diodes for DVD or CD will radiate beam. If the top cover is removed with no disc loaded while such short-circuit is continued, the naked eyes may be exposed to the laser beam.

CAUTION

Danger of explosion if battery is incorrectly replaced.
Replaced only with the same or equivalent type recommended by the manufacturer.
Discord used batteries according to the manufacturer's instructions.

CONTENTS

SAFETY INFORMATION 2
1. SERVICE PRECAUTIONS 6
1.1 SERVICE PRECAUTIONS 6
1.2 NOTES ON SOLDERING 8
2. SPECIFICATIONS 8
2.1 SPECIFICATIONS 8
2.2 DISC/CONTENT FORMAT 8
3. BASIC ITEMS FOR SERVICE 9
3.1 CHECK POINTS AFTER SERVICING 9
3.2 PCB LOCATIONS 10
3.3 JIGS LIST 11
3.4 CLEANING 11
4. BLOCK DIAGRAM 12
4.1 OVERALL CONNECTION DIAGRAM 12
4.2 BLOCK DIAGRAM 14
4.3 POWER SUPPLY SYSTEM FIGURE 20
5. DIAGNOSIS 24
5.1 OPERATIONAL FLOWCHART 24
5.2 INSPECTION METHOD OF PICKUP UNIT 25
5.3 DIAGNOSIS FLOWCHART FOR DVD UNIT 28
5.4 ERROR CODE LIST 28
5.5 CONNECTOR FUNCTION DESCRIPTION 31
5.6 MECHANICAL DESCRIPTION 32
6. SERVICE MODE 37
6.1 MONITOR TEST MODE 37
6.2 DVD TEST MODE 55
6.3 DVD MECHANISM TOUCH PANEL TEST MODE 64
7. DISASSEMBLY 65
8. EACH SETTING AND ADJUSTMENT 75
8.1 DVD ADJUSTMENT 75
8.2 PCL OUTPUT CONFIRMATION 80
9. EXPLODED VIEWS AND PARTS LIST 82
9.1 PACKING 82
9.2 EXTERIOR (1) 86
9.3 EXTERIOR (2) 88
9.4 EXTERIOR (3) 90
9.5 EXTERIOR (4) 92
9.6 DVD MECHANISM MODULE 96
10. SCHEMATIC DIAGRAM 98
10.1 MOTHER UNIT (VEHICLE IF) 98
10.2 MOTHER UNIT (PWR OTHER) 100
10.3 MOTHER UNIT (2CHDC/DC) 102
10.4 MOTHER UNIT (1CHDC/DC) 104
10.5 MOTHER UNIT (SYSCOM) 106
10.6 MOTHER UNIT (GERDA) (1/2 scale) 108
10.7 MOTHER UNIT (AVSEL) 110
10.8 MOTHER UNIT (OPAL) 112
10.9 MOTHER UNIT (PWR-IC) 114
10.10 MOTHER UNIT (PWR TUN) 116
10.11 MOTHER UNIT (LVDS TX) 118
10.12 MOTHER UNIT (LITHIO) 120
10.13 MOTHER UNIT (PWR USB) 122
10.14 MOTHER UNIT (MS7.2 IF) 124
10.15 MOTHER UNIT (EXT I/F) (1/2 scale) 126
10.16 MOTHER UNIT (BT) 128
10.17 MONITOR UNIT (PCB I/F) 130
10.18 MONITOR UNIT (S LCD BL) 132
10.19 MONITOR UNIT (S LCD PW) 134
10.20 MONITOR UNIT (LCD I/F) 136
10.21 MONITOR UNIT (LVDC RX) 138
10.22 DVD CORE UNIT (MS7.2) (1/2 scale) 140
10.23 COMPOUND UNIT(A) and COMPOUND UNIT(B) 142
10.24 KEYBOARD UNIT 144
10.25 MAIN PCB UNIT and SW PCB UNIT 146

10.26 WAVEFORMS....148
11. PCB CONNECTION DIAGRAM....150
11.1 MOTHER UNIT....150
11.2 MONITOR UNIT....154
11.3 DVD CORE UNIT (MS7.2)....158
11.4 COMPOUND UNIT(A) and COMPOUND UNIT(B)....162
11.5 KEYBOARD UNIT....163
11.6 MAIN PCB UNIT....164
11.7 SW PCB UNIT....165
12. ELECTRICAL PARTS LIST....166

1. SERVICE PRECAUTIONS

1.1 SERVICE PRECAUTIONS

1. You should conform to the regulations governing the product (safety, radio and noise, and other regulations), and should keep the safety during servicing by following the safety instructions described in this manual.
2. Be careful in handling ICs. Some ICs such as MOS type are so fragile that they can be damaged by electrostatic induction.
3. Before disassembling the unit, be sure to turn off the power. Unplugging and plugging the connectors during power-on mode may damage the ICs inside the unit.
4. To protect the pickup unit from electrostatic discharge during servicing, take an appropriate treatment (shorting-solder) by referring to "the DISASSEMBLY" .
5. After replacing the pickup unit, be sure to skew adjustment.
6. When a flash ROM needs to be replaced by service, do not replace an IC but a core unit (as no encryption key is written in a flash alone).
7. During disassembly, be sure to turn the power off since an internal IC might be destroyed when a connector is plugged or unplugged.
8. EJECT LOCK MODE for DVD mechanism
   How to enter : Turn on ACC while pressing [HOME] and [EJECT] keys together.
   How to exit : Same procedure to enter this mode.
9. The part listed below is difficult to replace as a discrete component part.
   When the part listed in the table is defective, replace whole Assy.

	Wiring Number	Part Number	Reason
Mother Unit	IC351	KBD9876EFJ	Bottom pad
Mother Unit	IC601	MN1AA9010Z	Bottom pad, Narrow pitch(0.4mm)
Mother Unit	IC891	337S3959	Bottom pad
Mother Unit	IC1201	PM9014A	Bottom pad
Mother Unit	IC2201	TEF6686HN	Bottom pad
Mother Unit	IC3101	STCC2540IQ	Bottom pad
Monitor Unit	IC5001	AK4187VN	Bottom pad
Monitor Unit	IC5101	OZ527ILN	Bottom pad
Monitor Unit	IC5201	R1290K103A	Bottom pad

10. ▭ area and a heat sink becomes hot areas. Be careful not to burn yourself.

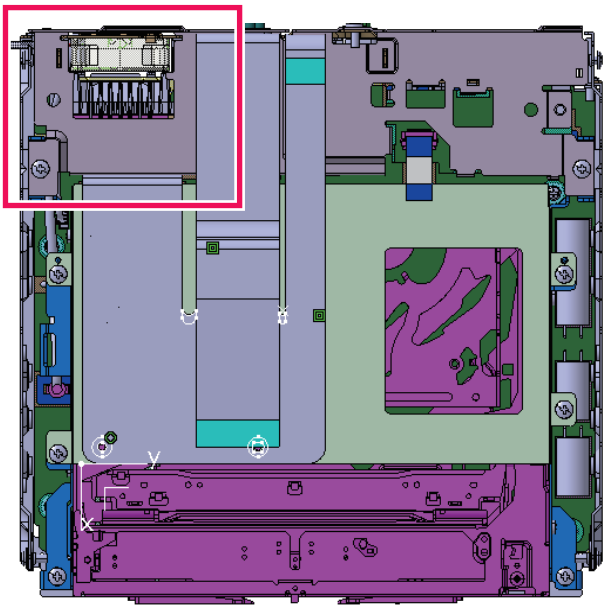

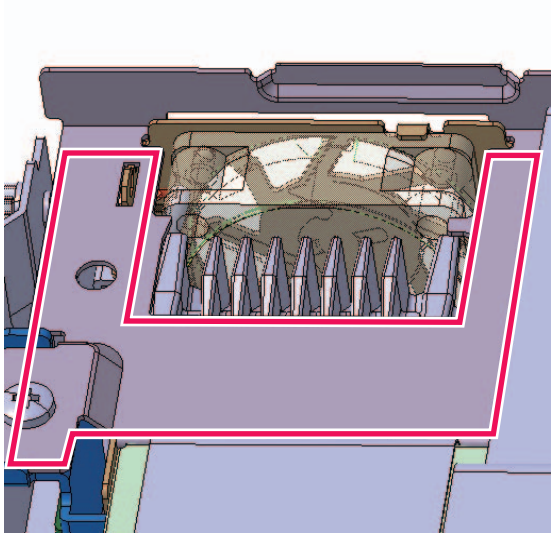

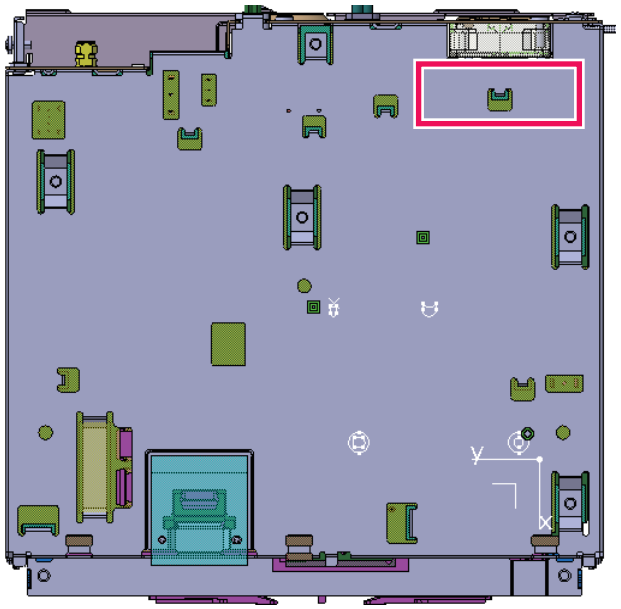

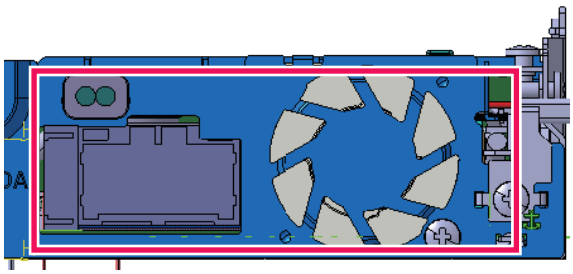

11. The following area becomes hot areas. Be careful not to burn yourself.

Mother Unit SIDE A

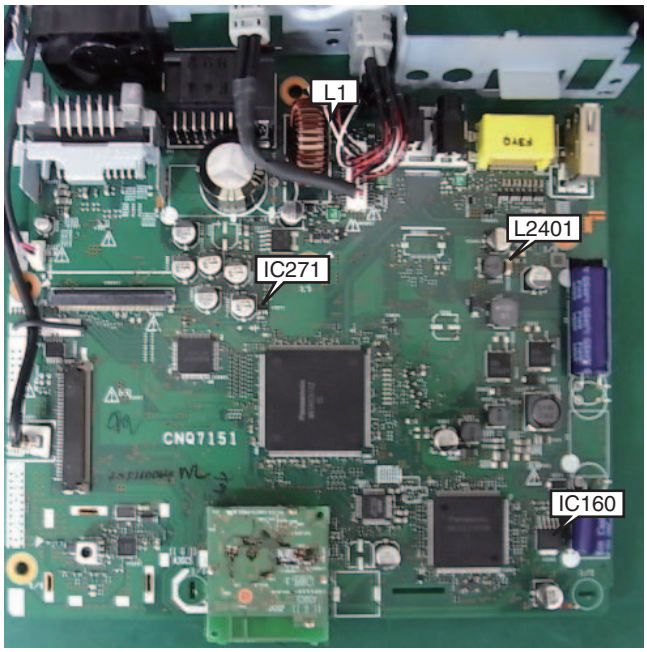

Mother Unit SIDE B

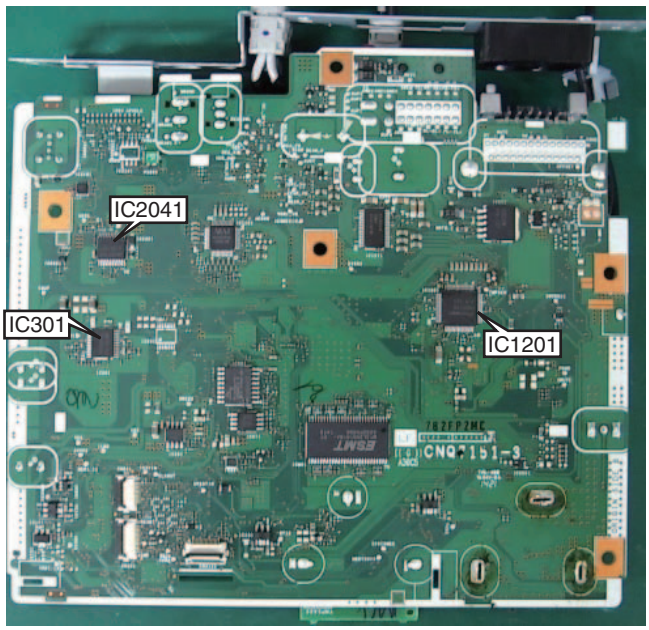

Note:
the photograph shown is slightly different from this model in shape.

1.2 NOTES ON SOLDERING

- For environmental protection, lead-free solder is used on the printed circuit boards mounted in this unit.
  Be sure to use lead-free solder and a soldering iron that can meet specifications for use with lead-free solders for repairs accompanied by reworking of soldering.

- Compared with conventional eutectic solders, lead-free solders have higher melting points, by approximately 40 °C.
  Therefore, for lead-free soldering, the tip temperature of a soldering iron must be set to around 373 °C in general, although the temperature depends on the heat capacity of the PC board on which reworking is required and the weight of the tip of the soldering iron.

Compared with eutectic solders, lead-free solders have higher bond strengths but slower wetting times and higher melting temperatures (hard to melt/easy to harden).

The following lead-free solders are available as service parts:

- Parts numbers of lead-free solder:
  GYP1006 1.0 in dia.
  GYP1007 0.6 in dia.
  GYP1008 0.3 in dia.

2. SPECIFICATIONS

2.1 SPECIFICATIONS

For all items except the backup current, refer to the Owner's Manual.

Backup current..... 5.0 mA or less

Fastening the front panel

If you do not plan to detach the front panel, the front panel can be fastened with supplied screw.

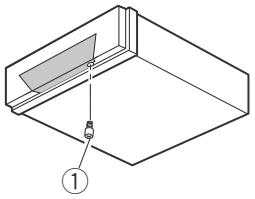

① Screw : BPZ20P060FTC (XNUC only)
XXX7020 (Except XNUC)

2.2 DISC/CONTENT FORMAT

DOLBY DIGITAL DIVX COMPACT disc DIGITAL AUDIO COMPACT disc DIGITAL VIDEO DVD VIDEO Made for iPod iPhone Bluetooth®

DVD is a trademark of DVD Format/Logo Licensing Corporation.

The *Bluetooth*® word mark and logos are registered trademarks owned by Bluetooth SIG, Inc. and any use of such marks by PIONEER CORPORATION is under license.
Other trademarks and trade names are those of their respective owners.

3. BASIC ITEMS FOR SERVICE

3.1 CHECK POINTS AFTER SERVICING

To keep the product quality after servicing, please confirm following check points.

No.		Procedures	Item to be confirmed
1		Confirm whether the customer complain has been solved. If the customer complain occurs with the specific media, use it for the operation check.	The customer complain must not be reappeared. Display, video, audio and operations must be normal.
2	Flap-mecha	Check the operation of the flap mechanism.	The flap mechanism operation must be smooth without making the noise and scratches.
3	DVD	Measure playback error rates at the innermost and outermost tracks by using the test mode with the following disc. DVD test disc (TDV-582)	Deterioration of mecha-drive can be checked. The error rate must be less than the threshold value. (Refer to the chapter of DIAGNOSIS for the threshold value.)
4	DVD	Play back a DVD. (Menu operation; Title/chapter search)	Display, video, audio and operations must be normal.
5	CD	Play back a CD. (Track search)	Display, audio and operations must be normal.
6		Check whether no disc is inside the product.	The media used for the operating check must be ejected.
7		Appearance check	No scratches or dirt on its appearance after receiving it for service.

For check items concerning image and voice, please refer to the followings:

Check items concerning image	**Check items concerning voice**
Block-noise	Distortion
Crosscut noise	Noise
Dot noise	Low volume
Distorted image (Image skip)	High volume
Low brightness	Changes in level
Too bright	Pause of sound
Color fading	
Partial discoloration	

3.2 PCB LOCATIONS

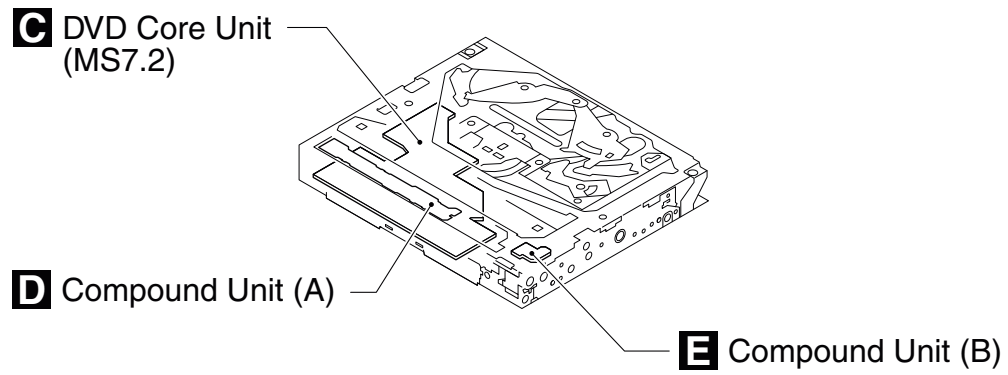

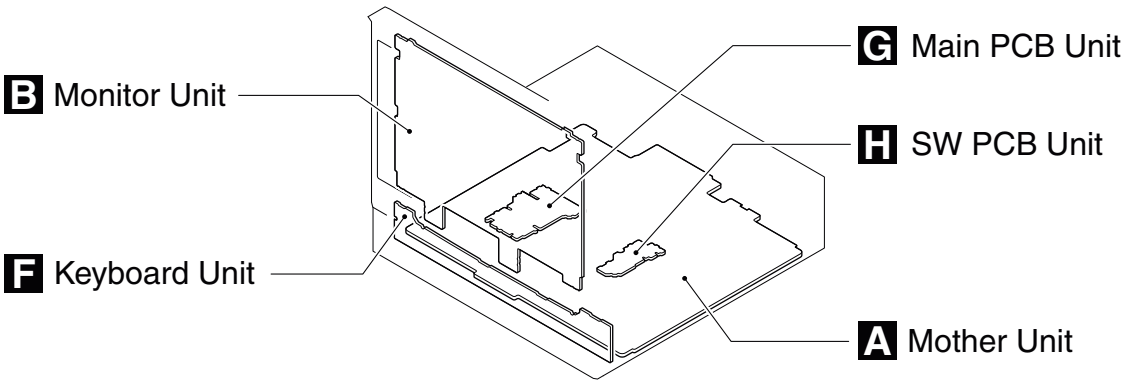

A:AVH-X7700BT/XNUC
B:AVH-X7700BT/XNEW5
C:AVH-X7700BT/XNUW5
D:AVH-X7750BT/XNRC
E:AVH-X7750BT/XNRD
F:AVH-X7750TV/XNRD
G:AVH-X7750BT/XNRI

Unit Name : Mother Unit
Unit Number : CWN8784(A)
Unit Number : CWN8782(B)
Unit Number : CWN8783(C)
Unit Number : CWN8785(D)
Unit Number : CWN8787(E)
Unit Number : CWN8786(F)
Unit Number : CWN8788(G)

Unit Name : Monitor Unit
Unit Number : CWN9246

Unit Name : DVD Core Unit(MS7.2)
Unit Number : CWX4606

Unit Name : Compound Unit(A)
Unit Number : CWX4034

Unit Name : Compound Unit(B)
Unit Number : CWX3394

Unit Name : Keyboard Unit
Unit Number : CWN8792

Unit Name : Main PCB Unit
Unit Number : EWX2008

Unit Name : SW PCB Unit
Unit Number : EWX2009

3.3 JIGS LIST

● Jigs List

Name	Jig No.	Remarks
DVD-Video	GGV1025	Inspection method of pickup unit and skew adjustment
CD-DA	TCD-782	Inspection method of pickup unit
Torques (T2) driver	GGK1095	Skew adjustment
30P FFC	GGD1222	DVD CORE UNIT <--> MOTHER UNIT

● Grease List

Name	Jig No.	Remarks
Grease	GEM1038	DVD Mechanism Module
Grease	GEM1045	DVD Mechanism Module
Grease	GEM1050	DVD Mechanism Module
Grease	GEM1085	DVD Mechanism Module
Grease	GEM1024	DVD Mechanism Module and Display Module Unit
Grease	GEM1043	DVD Mechanism Module and Display Module Unit
Bond	GEM1033	DVD Mechanism Module
Bond	GEM1068	DVD Mechanism Module
Grease	GEM1084	Display Module Unit

3.4 CLEANING

Before shipping out the product, be sure to clean the following portions by using the prescribed cleaning tools:

Portions to be cleaned	Cleaning tools
DVD pickup lenses	Cleaning liquid : GEM1004 Cleaning paper : GED-008

Portions to be cleaned	Cleaning tools
Fans	Cleaning paper : GED-008

4. BLOCK DIAGRAM

4.1 OVERALL CONNECTION DIAGRAM

Note: When ordering service parts, be sure to refer to " EXPLODED VIEWS AND PARTS LIST" or "ELECTRICAL PARTS LIST".

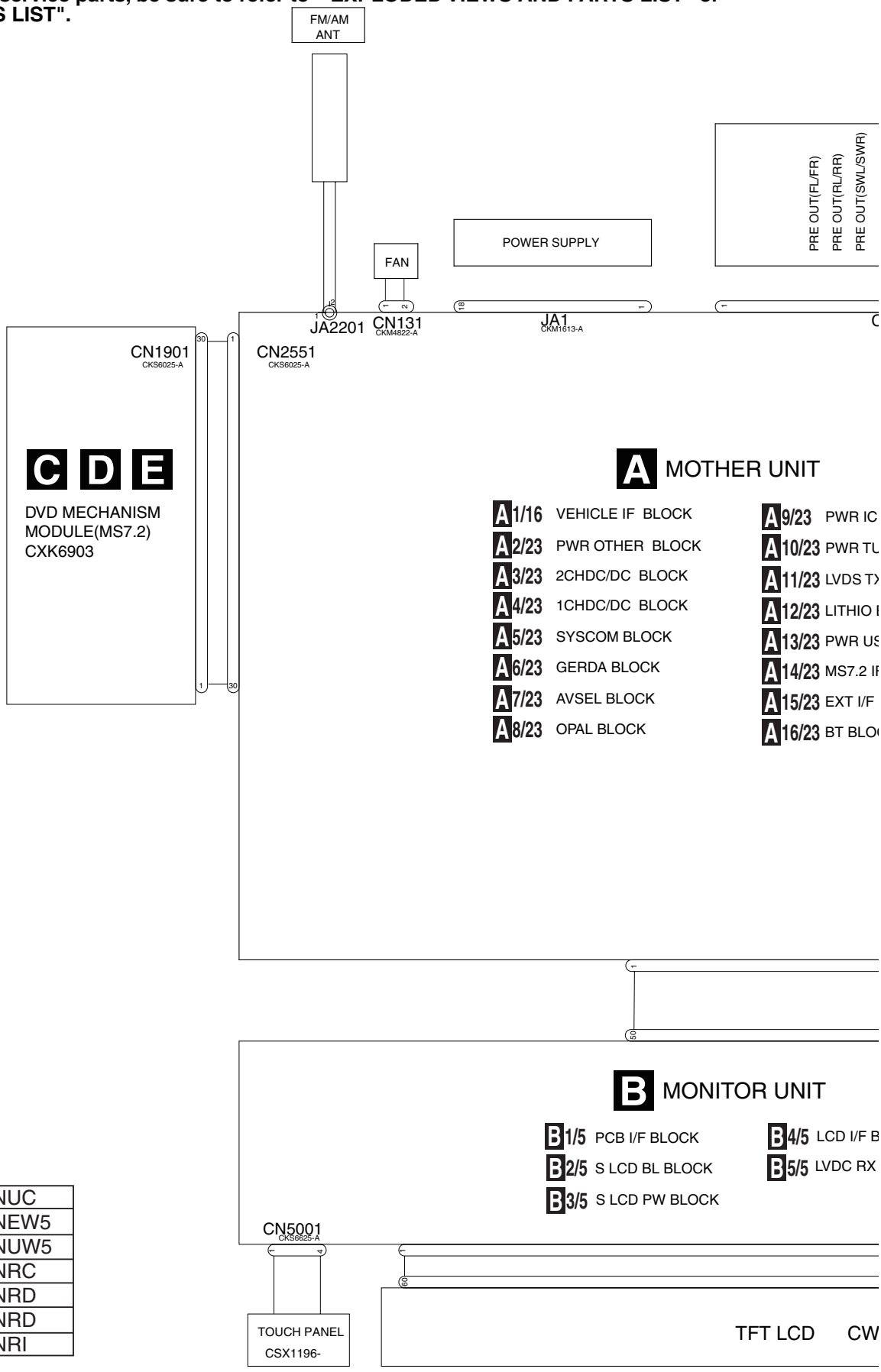

Ⓐ	AVH-X7700BT/XNUC
Ⓑ	AVH-X7700BT/XNEW5
Ⓒ	AVH-X7700BT/XNUW5
Ⓓ	AVH-X7750BT/XNRC
Ⓔ	AVH-X7750BT/XNRD
Ⓕ	AVH-X7750TV/XNRD
Ⓖ	AVH-X7750BT/XNRI

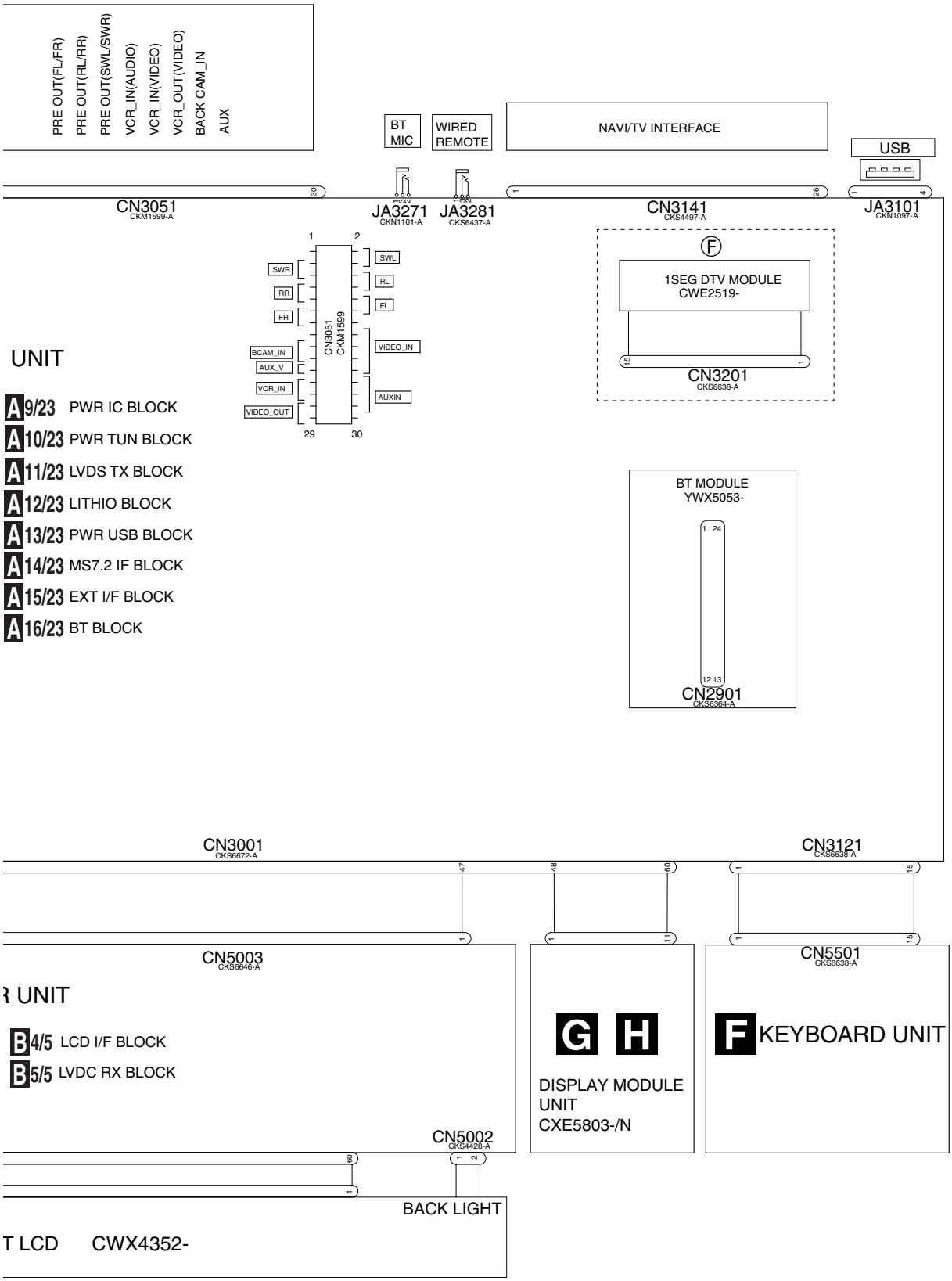
PRE OUT(FL/FR)
PRE OUT(RL/RR)
PRE OUT(SWL/SWR)
VCR_IN(AUDIO)
VCR_IN(VIDEO)
VCR_OUT(VIDEO)
BACK CAM_IN
AUX
BT MIC
WIRED REMOTE
NAVI/TV INTERFACE
USB
CN3051
CKM1599-A
JA3271
CKN1101-A
JA3281
CKS6437-A
CN3141
CKS4497-A
JA3101
CKN1097-A
SWR
RR
FR
BCAM_IN
AUX_V
VCR_IN
VIDEO_OUT
SWL
RL
FL
VIDEO_IN
AUXIN
CN3051
CKM1599
1SEG DTV MODULE
CWE2519-
CN3201
CKS6638-A
UNIT
A 9/23 PWR IC BLOCK
A 10/23 PWR TUN BLOCK
A 11/23 LVDS TX BLOCK
A 12/23 LITHIO BLOCK
A 13/23 PWR USB BLOCK
A 14/23 MS7.2 IF BLOCK
A 15/23 EXT I/F BLOCK
A 16/23 BT BLOCK
BT MODULE
YWX5053-
CN2901
CKS6364-A
CN3001
CKS6672-A
CN3121
CKS6638-A
CN5003
CKS6646-A
CN5501
CKS6638-A
R UNIT
B 4/5 LCD I/F BLOCK
B 5/5 LVDC RX BLOCK
G H
DISPLAY MODULE
UNIT
CXE5803-/N
F KEYBOARD UNIT
CN5002
CKS4428-A
BACK LIGHT
T LCD CWX4352-

4.2 BLOCK DIAGRAM

● SYSTEM BLOCK DIAGRAM

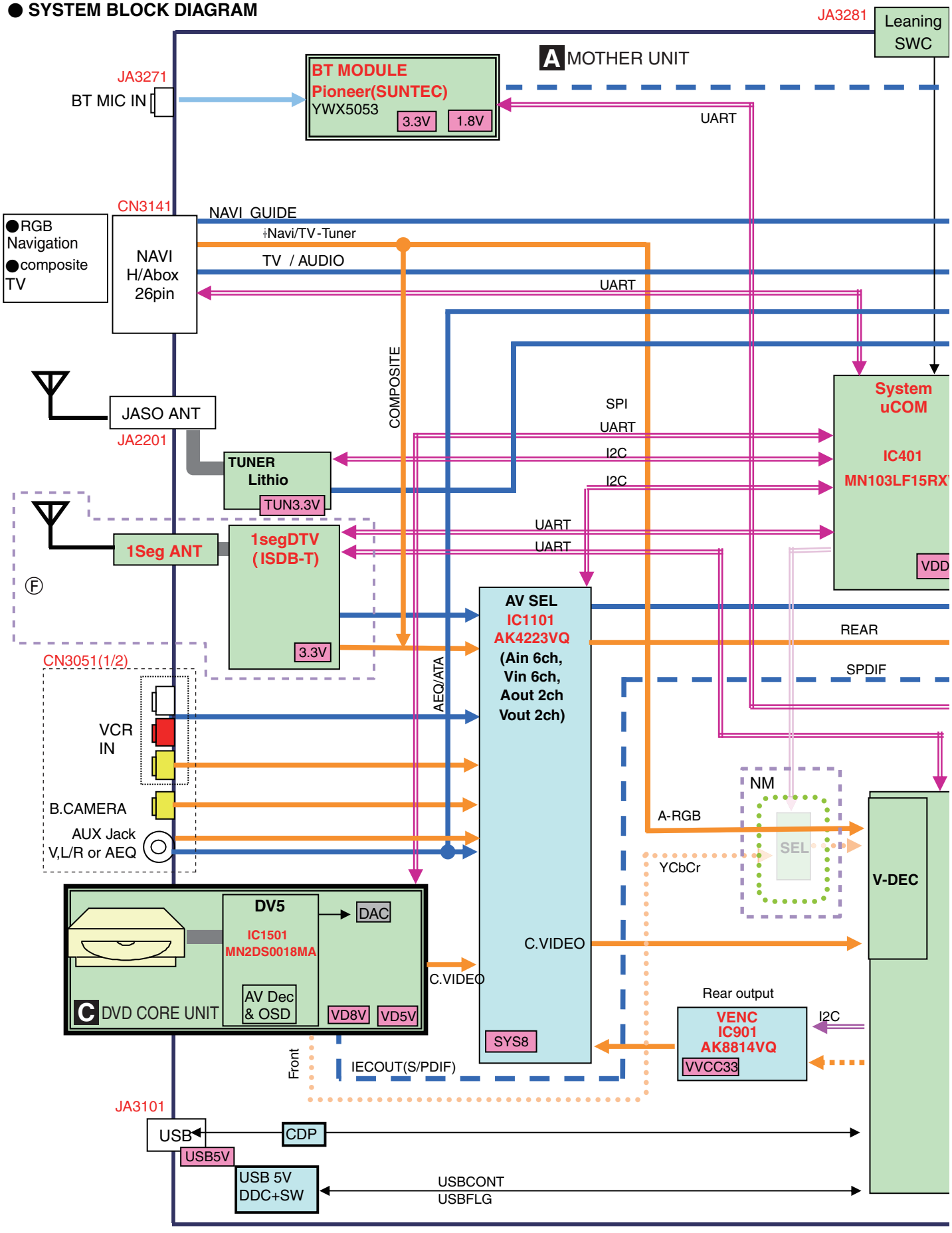

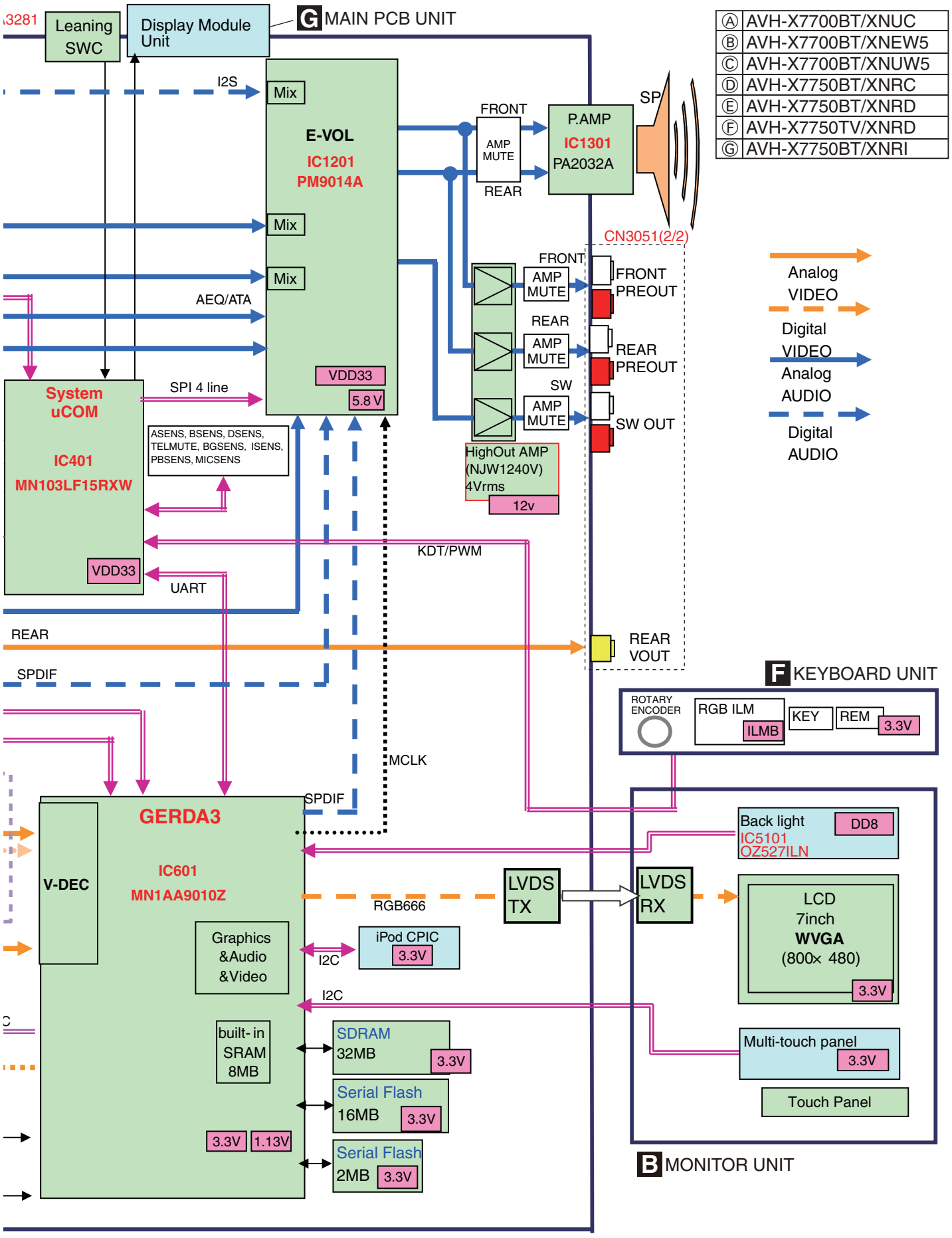

Ⓐ	AVH-X7700BT/XNUC
Ⓑ	AVH-X7700BT/XNEW5
Ⓒ	AVH-X7700BT/XNUW5
Ⓓ	AVH-X7750BT/XNRC
Ⓔ	AVH-X7750BT/XNRD
Ⓕ	AVH-X7750TV/XNRD
Ⓖ	AVH-X7750BT/XNRI

● AUDIO BLOCK DIAGRAM

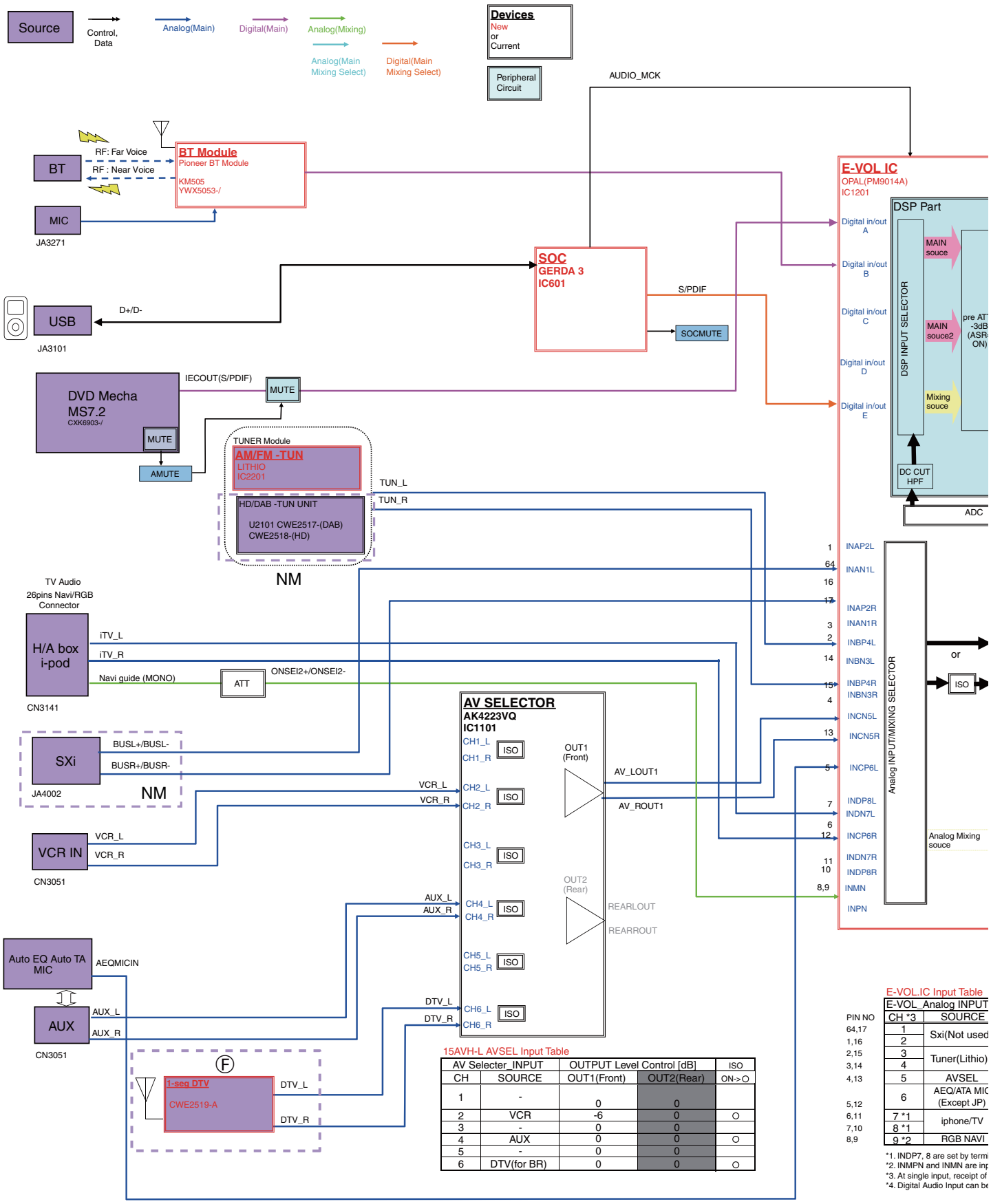

15AVH-L AVSEL Input Table

AV Selecter_INPUT		OUTPUT Level Control [dB]		ISO
CH	SOURCE	OUT1(Front)	OUT2(Rear)	ON->○
1	-	0	0	
2	VCR	-6	0	○
3	-	0	0	
4	AUX	0	0	○
5	-	0	0	
6	DTV(for BR)	0	0	○

E-VOL IC Input Table

PIN NO	E-VOL_Analog INPUT	
	CH *3	SOURCE
64,17	1	Sxi(Not used
1,16	2	
2,15	3	Tuner(Lithio)
3,14	4	
4,13	5	AVSEL
5,12	6	AEQ/ATA MIC (Except JP)
6,11	7 *1	iphone/TV
7,10	8 *1	
8,9	9 *2	RGB NAVI

*1. INDP7, 8 are set by termi
*2. INMPN and INMN are inp
*3. At single input, receipt of
*4. Digital Audio Input can be

A MOTHER UNIT

Ⓐ	AVH-X7700BT/XNUC
Ⓑ	AVH-X7700BT/XNEW5
Ⓒ	AVH-X7700BT/XNUW5
Ⓓ	AVH-X7750BT/XNRC
Ⓔ	AVH-X7750BT/XNRD
Ⓕ	AVH-X7750TV/XNRD
Ⓖ	AVH-X7750BT/XNRI

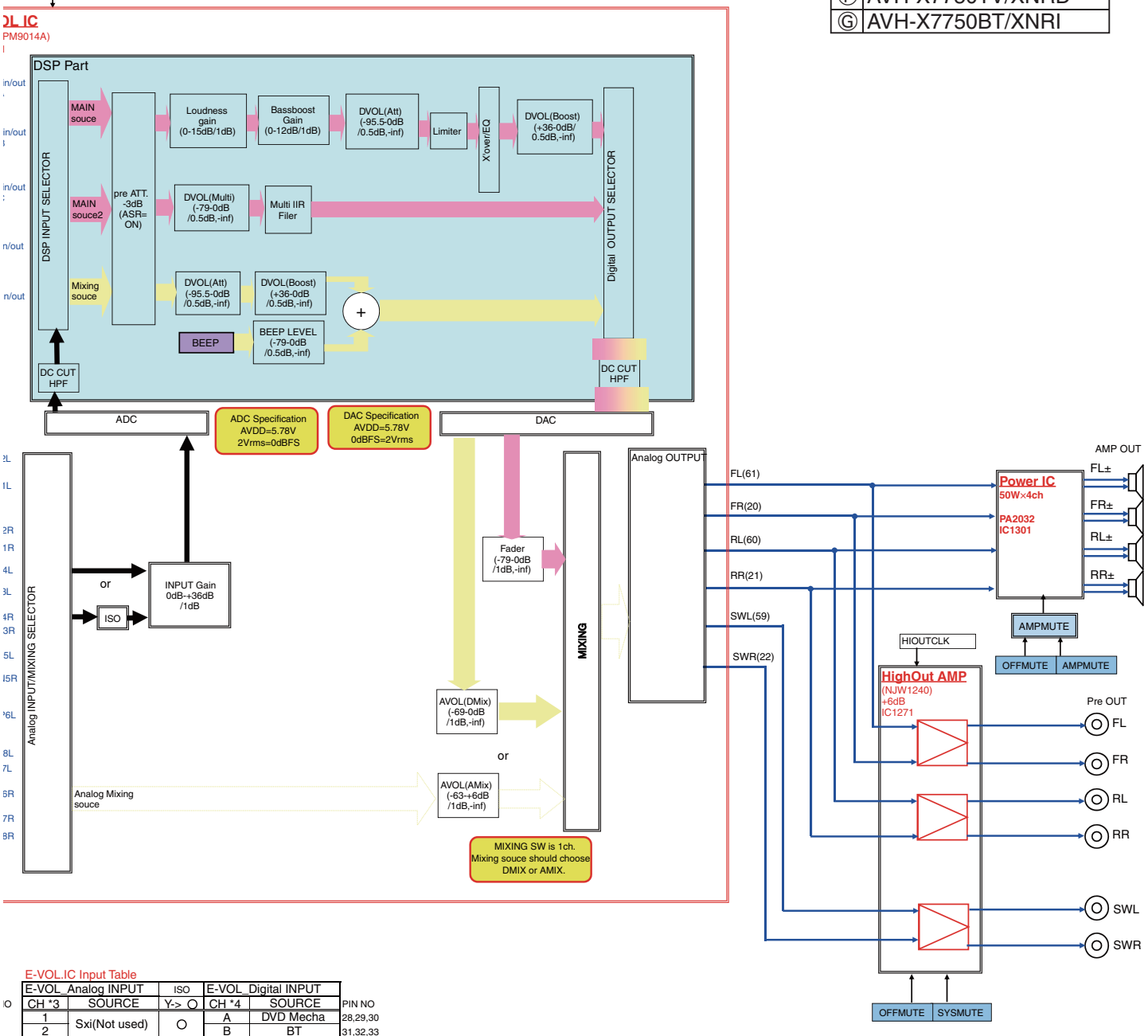

E-VOL.IC Input Table

E-VOL_Analog INPUT		ISO	E-VOL_Digital INPUT		PIN NO
CH *3	SOURCE	Y-> ○	CH *4	SOURCE	
1	Sxi(Not used)	○	A	DVD Mecha	28,29,30
2			B	BT	31,32,33
3	Tuner(Lithio)	○	C	-	35,36,37
4			D	-	45,46,47
5	AVSEL		E	SOC	48,49,50
6	AEQ/ATA MIC (Except JP)		-		
7 *1	iphone/TV	○	-		
8 *1			-		
9 *2	RGB NAVI	○	-		

*1. INDP7, 8 are set by terminal resistor common to main source and mixing source (simultaneous use is also available).
*2. INMPN and INMN are input dedicated to mixing. If differential is received by ISOLATOR, they become negative input of INDP8.
*3. At single input, receipt of 8ch by ISOLATOR becomes 4CH.
*4. Digital Audio Input can be also set to output depending on setting of resistor.

● VIDEO BLOCK DIAGRAM

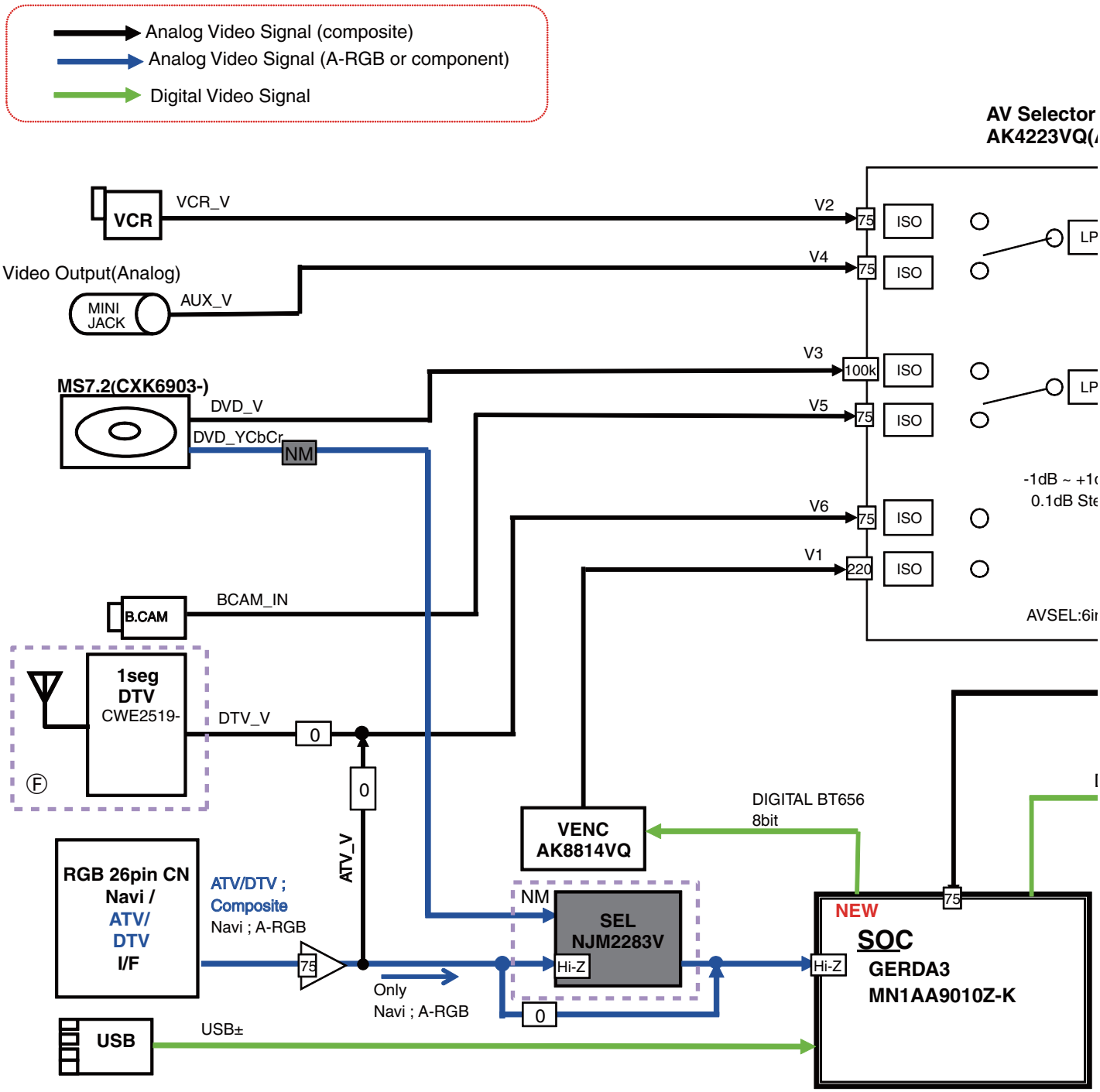

A MOTHER UNIT

Ⓐ	AVH-X7700BT/XNUC
Ⓑ	AVH-X7700BT/XNEW5
Ⓒ	AVH-X7700BT/XNUW5
Ⓓ	AVH-X7750BT/XNRC
Ⓔ	AVH-X7750BT/XNRD
Ⓕ	AVH-X7750TV/XNRD
Ⓖ	AVH-X7750BT/XNRI

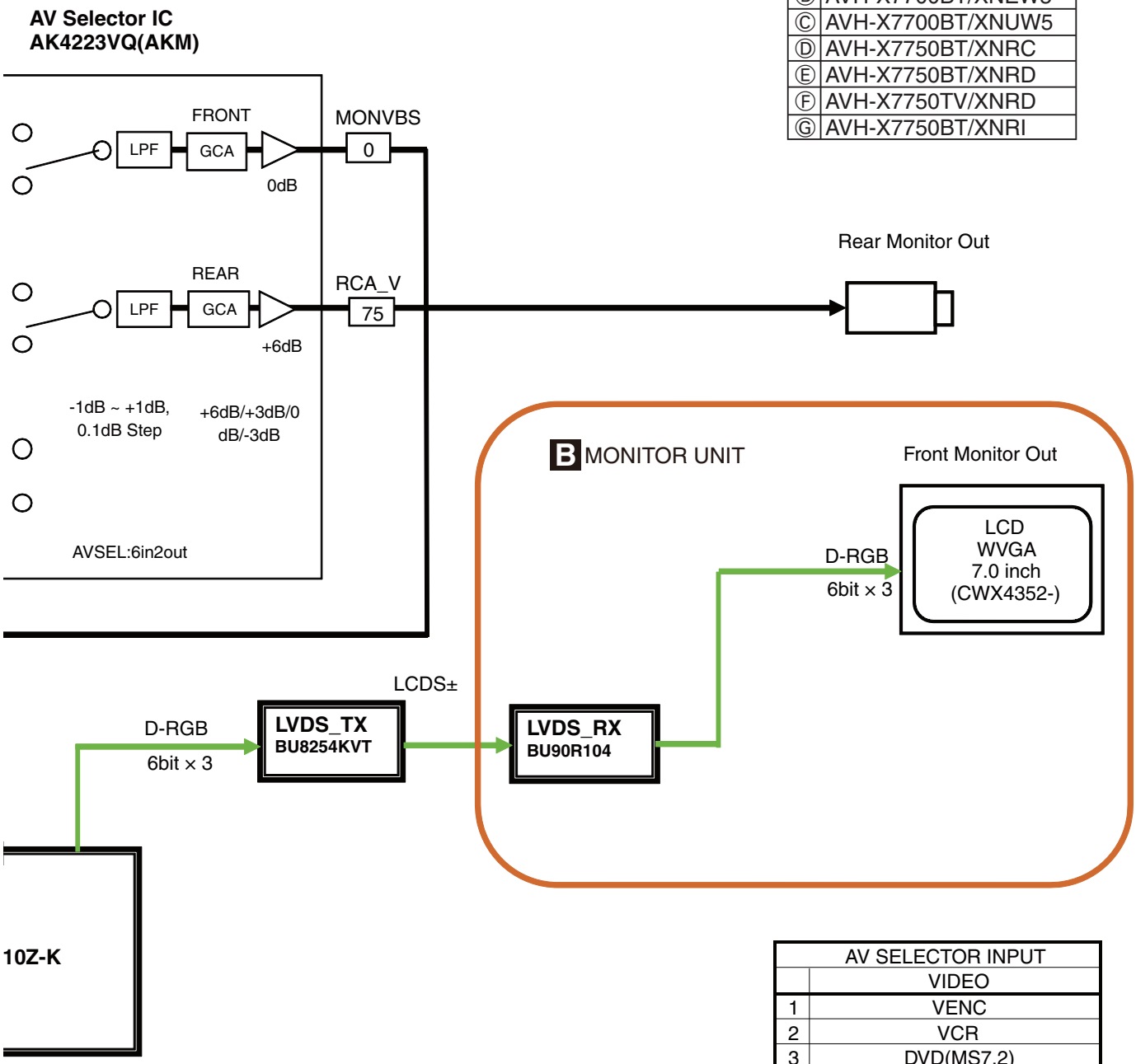

AV SELECTOR INPUT	
	VIDEO
1	VENC
2	VCR
3	DVD(MS7.2)
4	AUX
5	BCAM_IN
6	DTV/ATV

4.3 POWER SUPPLY SYSTEM FIGURE

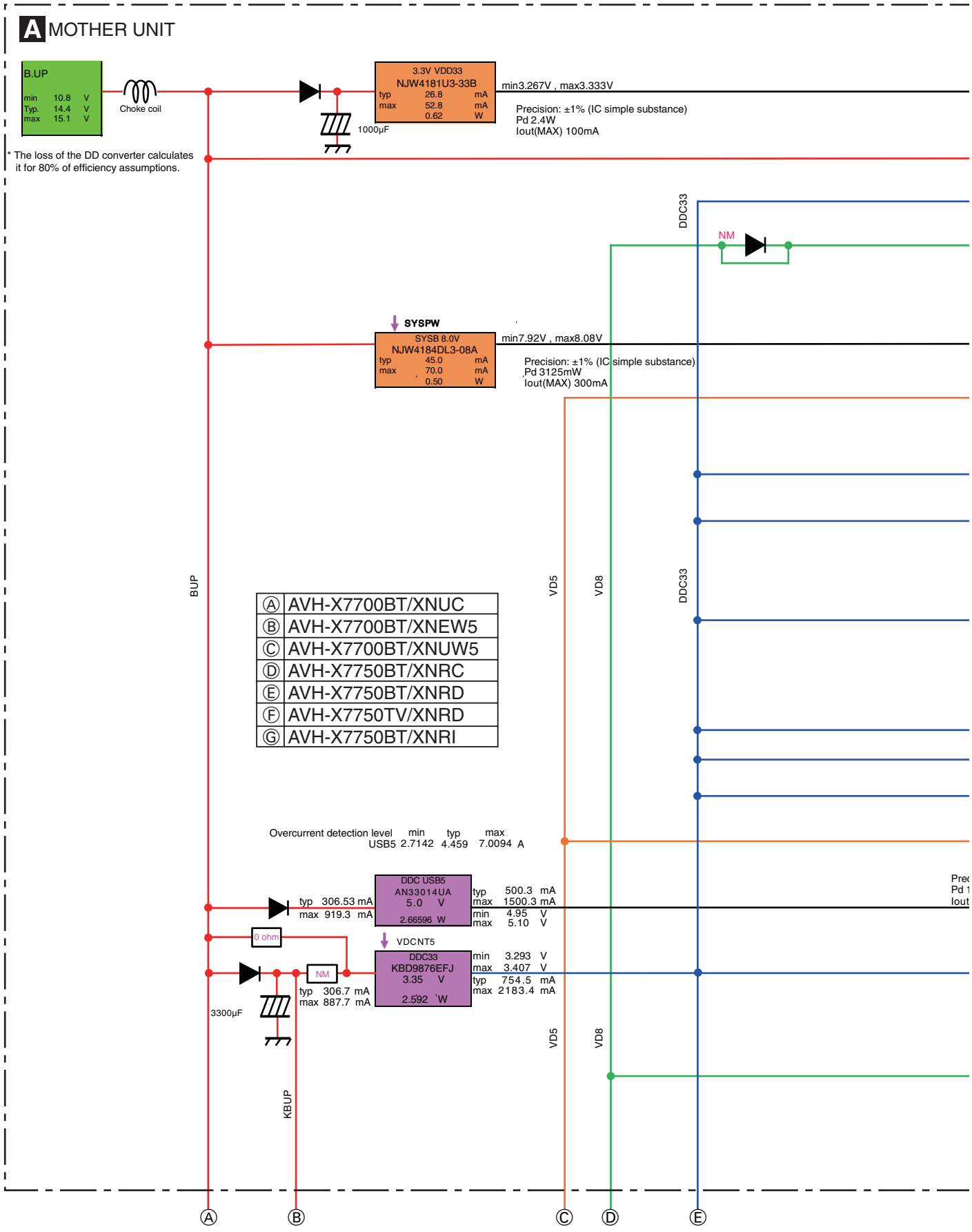

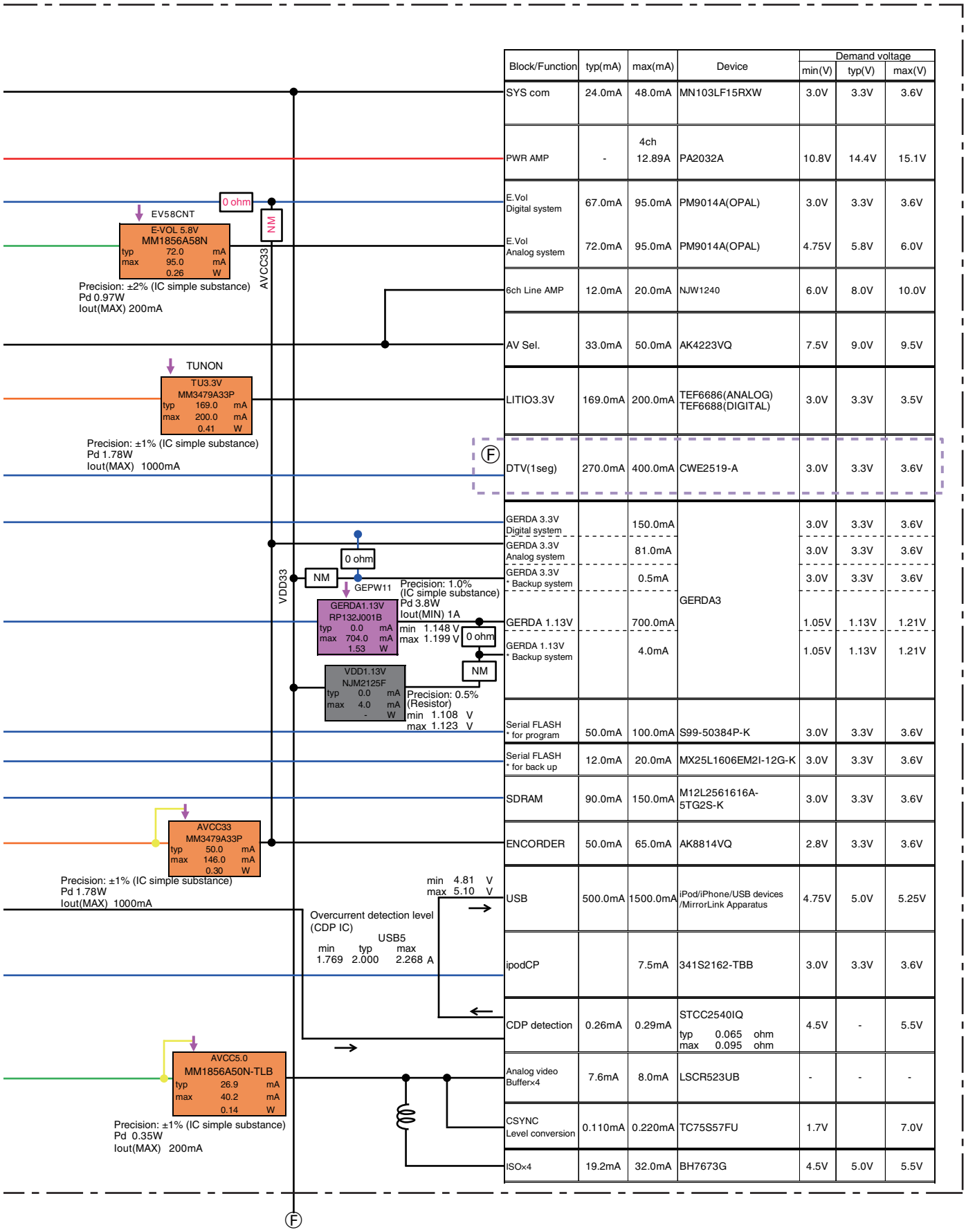

Block/Function	typ(mA)	max(mA)	Device	Demand voltage min(V)	typ(V)	max(V)
SYS com	24.0mA	48.0mA	MN103LF15RXW	3.0V	3.3V	3.6V
PWR AMP	-	4ch 12.89A	PA2032A	10.8V	14.4V	15.1V
E.Vol Digital system	67.0mA	95.0mA	PM9014A(OPAL)	3.0V	3.3V	3.6V
E.Vol Analog system	72.0mA	95.0mA	PM9014A(OPAL)	4.75V	5.8V	6.0V
6ch Line AMP	12.0mA	20.0mA	NJW1240	6.0V	8.0V	10.0V
AV Sel.	33.0mA	50.0mA	AK4223VQ	7.5V	9.0V	9.5V
LITIO3.3V	169.0mA	200.0mA	TEF6686(ANALOG) TEF6688(DIGITAL)	3.0V	3.3V	3.5V
DTV(1seg)	270.0mA	400.0mA	CWE2519-A	3.0V	3.3V	3.6V
GERDA 3.3V Digital system		150.0mA	GERDA3	3.0V	3.3V	3.6V
GERDA 3.3V Analog system		81.0mA		3.0V	3.3V	3.6V
GERDA 3.3V * Backup system		0.5mA		3.0V	3.3V	3.6V
GERDA 1.13V		700.0mA		1.05V	1.13V	1.21V
GERDA 1.13V * Backup system		4.0mA		1.05V	1.13V	1.21V
Serial FLASH * for program	50.0mA	100.0mA	S99-50384P-K	3.0V	3.3V	3.6V
Serial FLASH * for back up	12.0mA	20.0mA	MX25L1606EM2I-12G-K	3.0V	3.3V	3.6V
SDRAM	90.0mA	150.0mA	M12L2561616A-5TG2S-K	3.0V	3.3V	3.6V
ENCORDER	50.0mA	65.0mA	AK8814VQ	2.8V	3.3V	3.6V
USB	500.0mA	1500.0mA	iPod/iPhone/USB devices /MirrorLink Apparatus	4.75V	5.0V	5.25V
ipodCP		7.5mA	341S2162-TBB	3.0V	3.3V	3.6V
CDP detection	0.26mA	0.29mA	STCC2540IQ typ 0.065 ohm max 0.095 ohm	4.5V	-	5.5V
Analog video Buffer×4	7.6mA	8.0mA	LSCR523UB	-	-	-
CSYNC Level conversion	0.110mA	0.220mA	TC75S57FU	1.7V		7.0V
ISO×4	19.2mA	32.0mA	BH7673G	4.5V	5.0V	5.5V

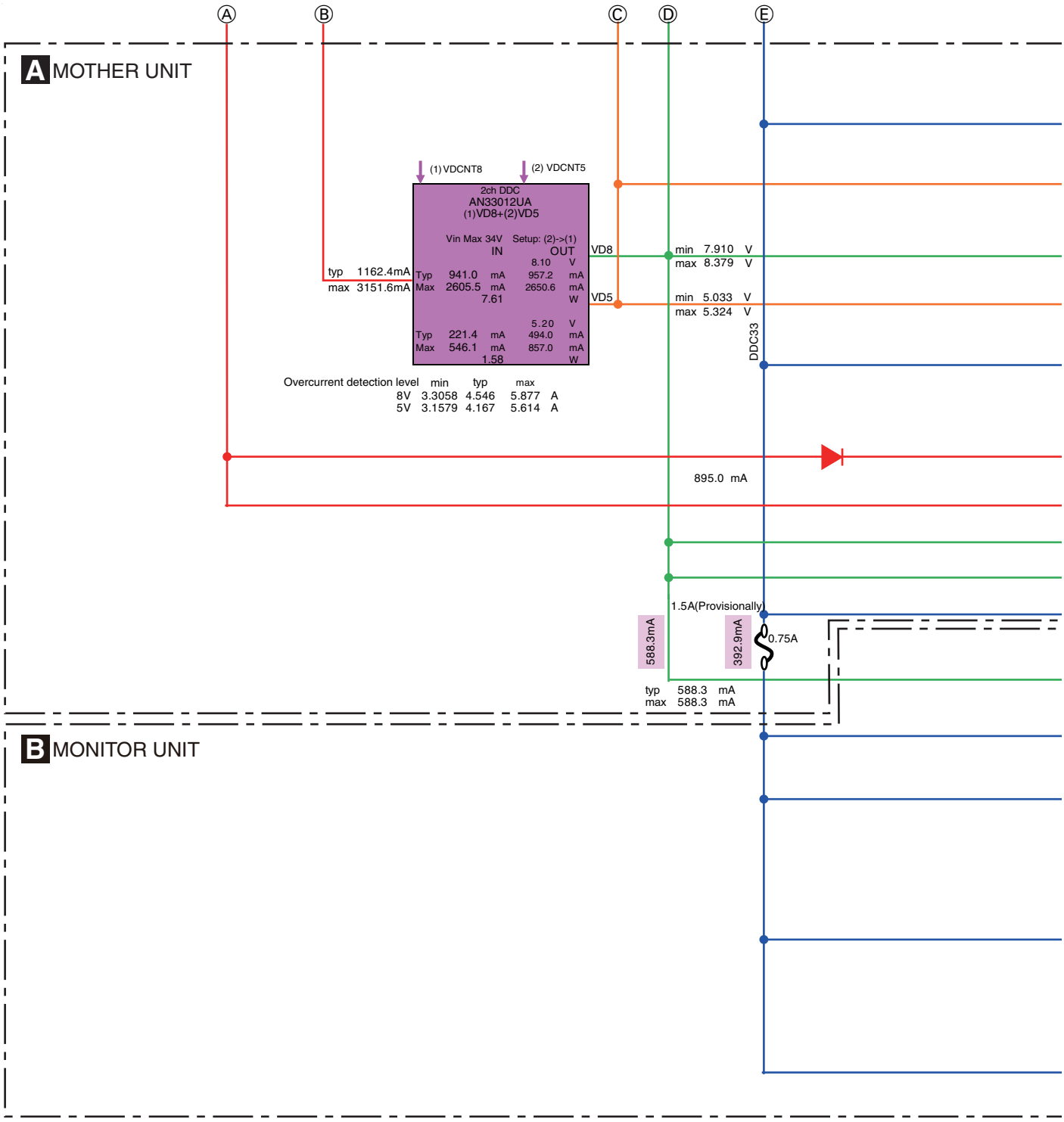
A MOTHER UNIT
(1) VDCNT8
(2) VDCNT5
2ch DDC
AN33012UA
(1)VD8+(2)VD5
Vin Max 34V
Setup: (2)->(1)
IN
OUT
8.10 V
typ 1162.4mA
max 3151.6mA
Typ 941.0 mA
Max 2605.5 mA
957.2 mA
2650.6 mA
7.61 W
VD8
VD5
min 7.910 V
max 8.379 V
min 5.033 V
max 5.324 V
5.20 V
Typ 221.4 mA
Max 546.1 mA
494.0 mA
857.0 mA
1.58 W
DDC33
Overcurrent detection level min typ max
8V 3.3058 4.546 5.877 A
5V 3.1579 4.167 5.614 A
895.0 mA
1.5A(Provisionally)
588.3mA
392.9mA
0.75A
typ 588.3 mA
max 588.3 mA
B MONITOR UNIT

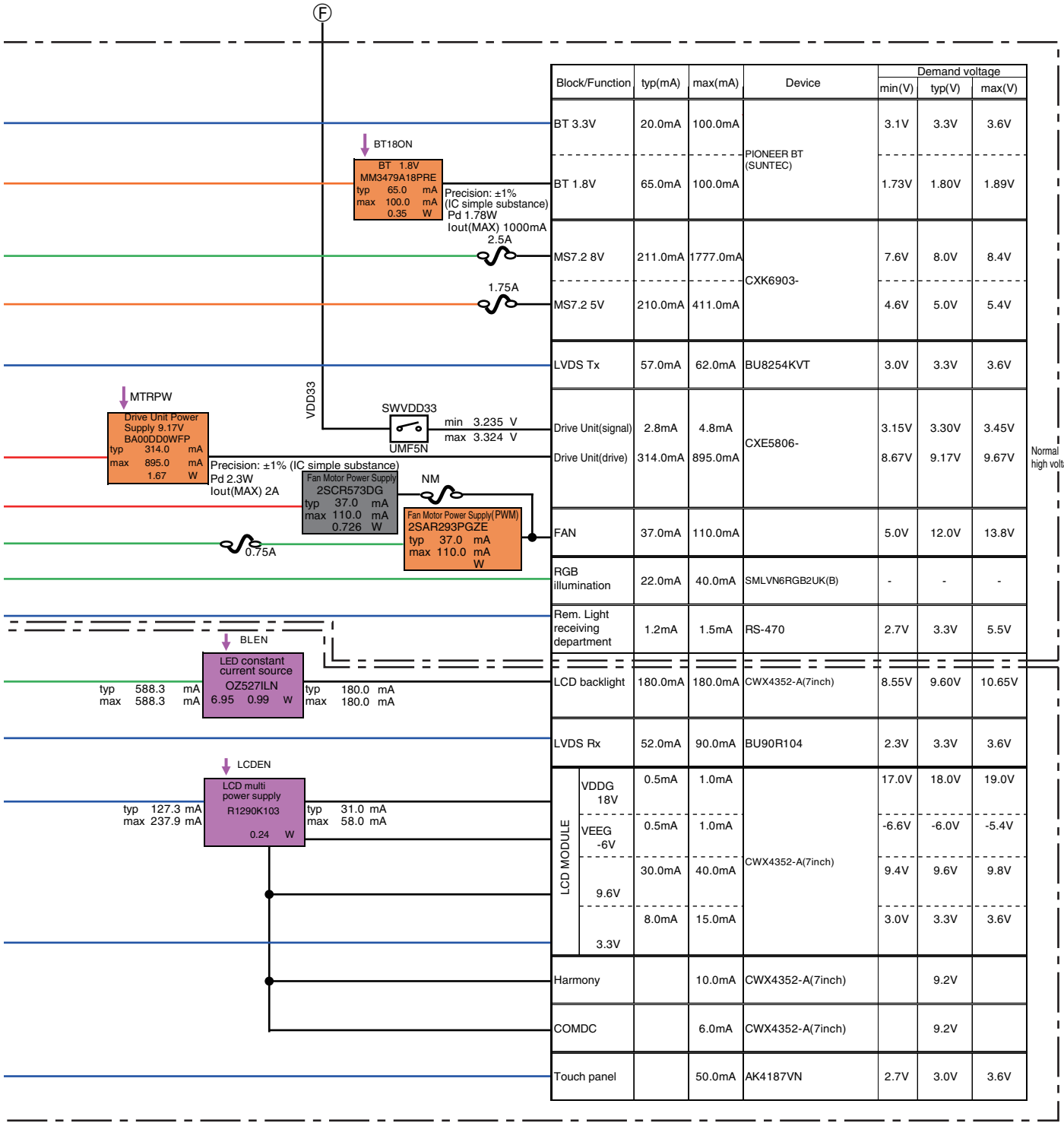

Block/Function		typ(mA)	max(mA)	Device	Demand voltage min(V)	typ(V)	max(V)
BT 3.3V		20.0mA	100.0mA	PIONEER BT (SUNTEC)	3.1V	3.3V	3.6V
BT 1.8V		65.0mA	100.0mA		1.73V	1.80V	1.89V
MS7.2 8V		211.0mA	1777.0mA	CXK6903-	7.6V	8.0V	8.4V
MS7.2 5V		210.0mA	411.0mA		4.6V	5.0V	5.4V
LVDS Tx		57.0mA	62.0mA	BU8254KVT	3.0V	3.3V	3.6V
Drive Unit(signal)		2.8mA	4.8mA	CXE5806-	3.15V	3.30V	3.45V
Drive Unit(drive)		314.0mA	895.0mA		8.67V	9.17V	9.67V
FAN		37.0mA	110.0mA		5.0V	12.0V	13.8V
RGB illumination		22.0mA	40.0mA	SMLVN6RGB2UK(B)	-	-	-
Rem. Light receiving department		1.2mA	1.5mA	RS-470	2.7V	3.3V	5.5V
LCD backlight		180.0mA	180.0mA	CWX4352-A(7inch)	8.55V	9.60V	10.65V
LVDS Rx		52.0mA	90.0mA	BU90R104	2.3V	3.3V	3.6V
LCD MODULE	VDDG 18V	0.5mA	1.0mA	CWX4352-A(7inch)	17.0V	18.0V	19.0V
	VEEG -6V	0.5mA	1.0mA		-6.6V	-6.0V	-5.4V
	9.6V	30.0mA	40.0mA		9.4V	9.6V	9.8V
	3.3V	8.0mA	15.0mA		3.0V	3.3V	3.6V
Harmony			10.0mA	CWX4352-A(7inch)		9.2V	
COMDC			6.0mA	CWX4352-A(7inch)		9.2V	
Touch panel			50.0mA	AK4187VN	2.7V	3.0V	3.6V

Normal high voltage

5. DIAGNOSIS
5.1 OPERATIONAL FLOWCHART

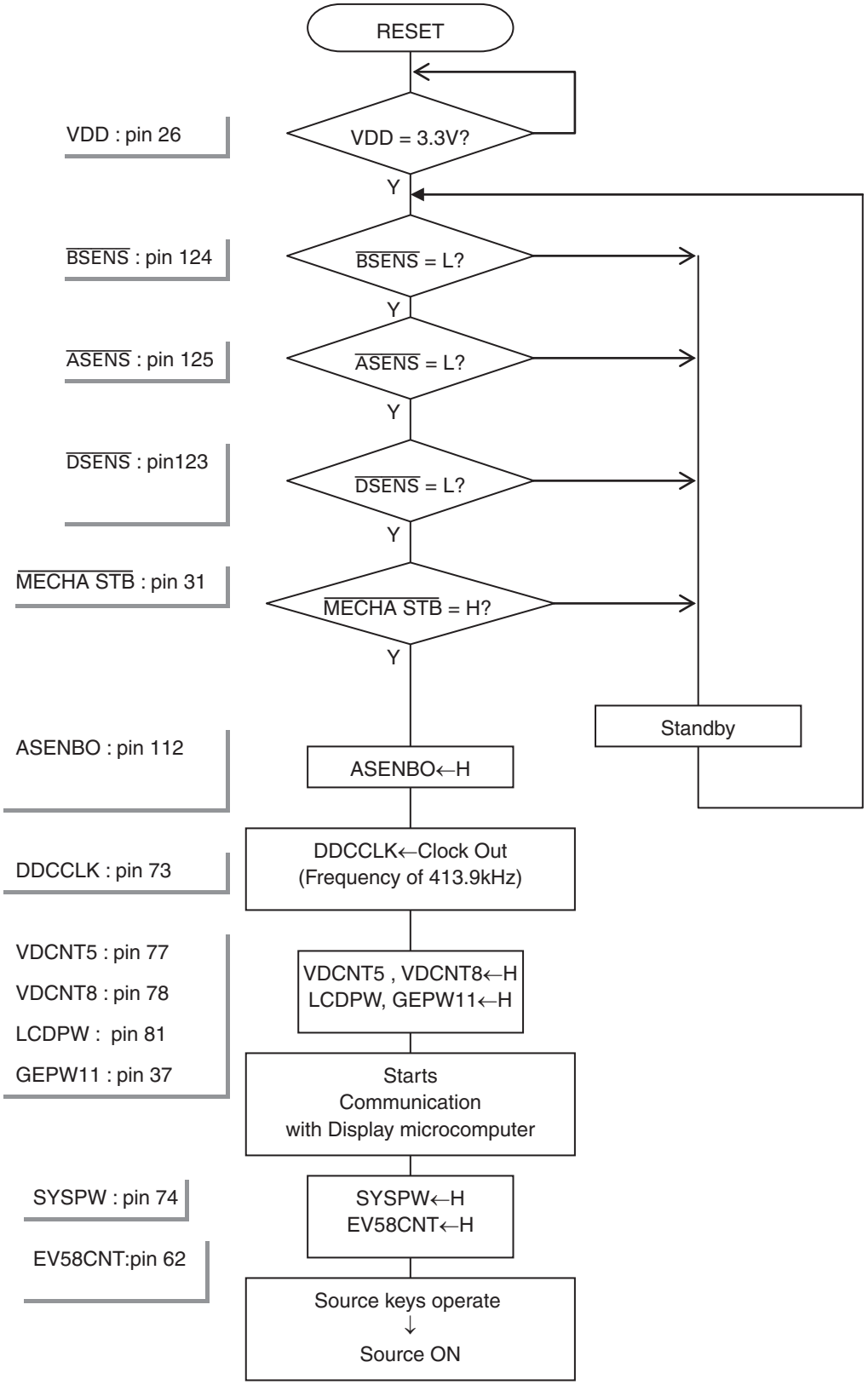

5.2 INSPECTION METHOD OF PICKUP UNIT

Judgement of pickup conditions

- Disc used:
  CD-DA : TCD-782
  DVD-Video : GGV1025

  * Handle or store discs with care as scratched or dirty discs cannot provide accurate judgement.

- How to diagnose

  * For the details of checks 1 to 3, see the next page.
    See also the mecha test mode described in the service manual.

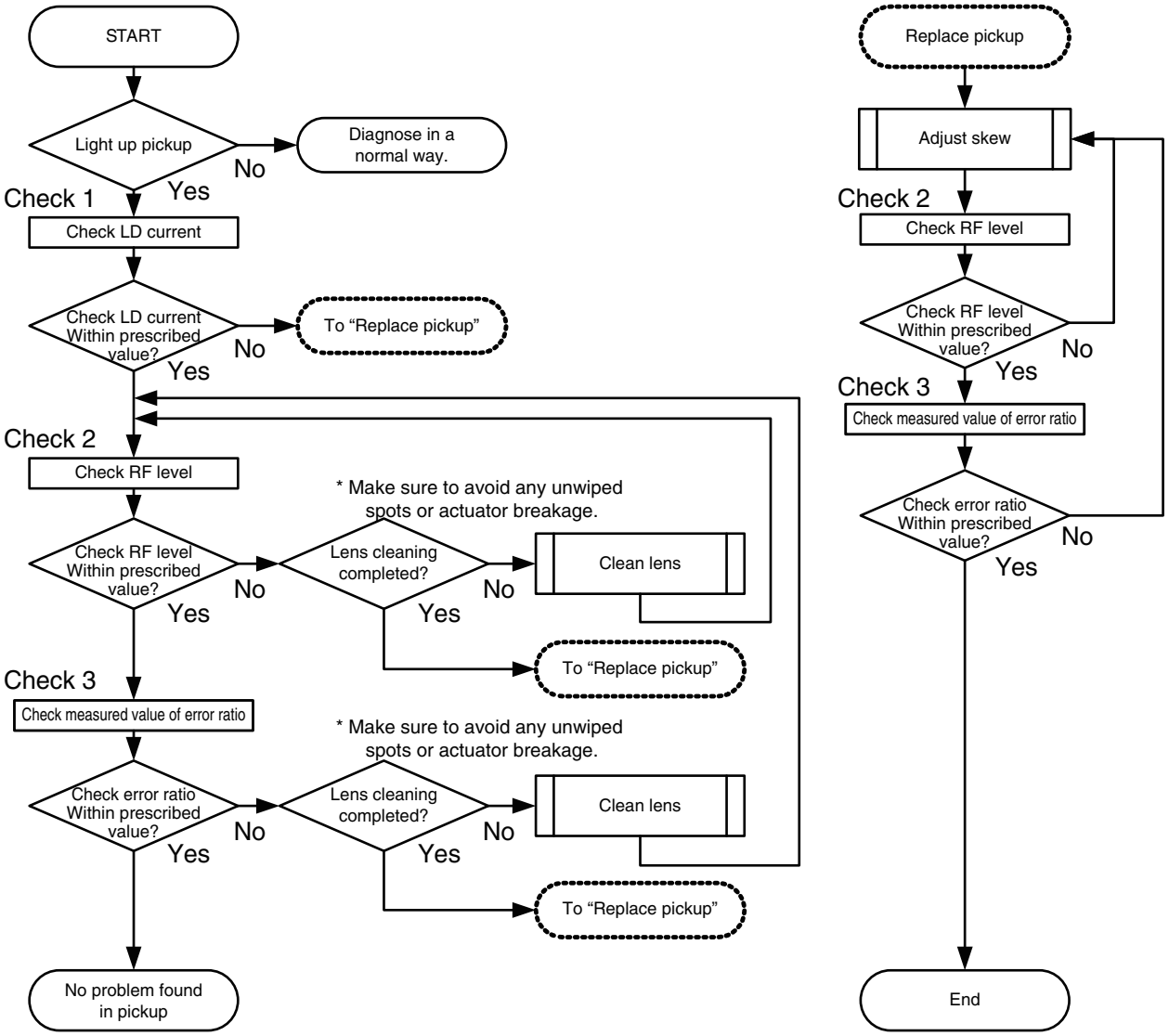

Check 1: Check LD current

<Check>

Check the voltage value between terminals in the focus closed status in the test mode.

NO.	Disc used	Spot to check	Rated value	Remarks: LD current value (ref.)
1	GGV1025	DVDLD1-VCC5_3	88~572(mV)	10~65(mA)

NO.	Disc used	Spot to check	Rated value	Remarks: LD current value (ref.)
2	TCD-782	CDLD1-VCC5_3	150~900(mV)	10~60(mA)

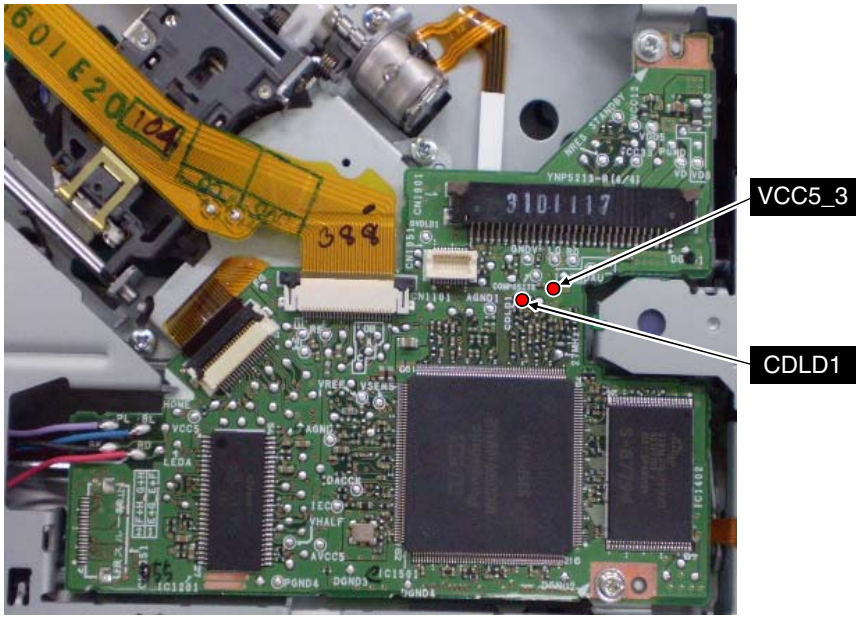

Mind breakage of a laser diode caused by static electricity.

Check 2: Check RF level

<Check>
Check the “ASMAX value” on the test mode screen in the focus closed status in the test mode.

NO.	Disc used	Spot to check	Rated value	Remarks:
1	GGV1025	ASMAX value on test mode screen	0000 0026 or more (check)	RF level requiring gain + 6dBup (ASMAX level)
2	TCD-782	ASMAX value on test mode screen	0000 0029 or more (check)	RF level requiring gain + 6dBup (ASMAX level)

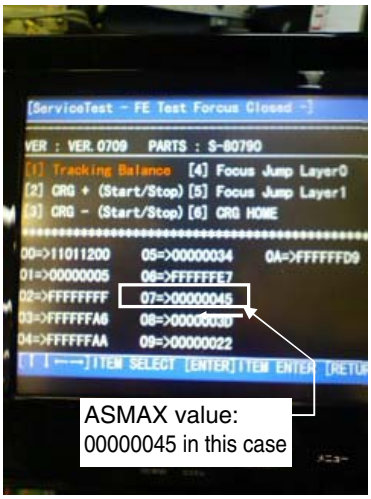

Check 3: Check measured values of error ratio

<Check>
Check the error ratio of a specified ID in the tracking closed status in the test mode.

NO.	Disc used	Spot to check	Rated value	Remarks:
1	GGV1025	ID : 40000	1.000E-3 or less	
2	GGV1025	ID : 200000	1.000E-3 or less	
3	TCD-782	ID : Home position	2.500E-3 or less	

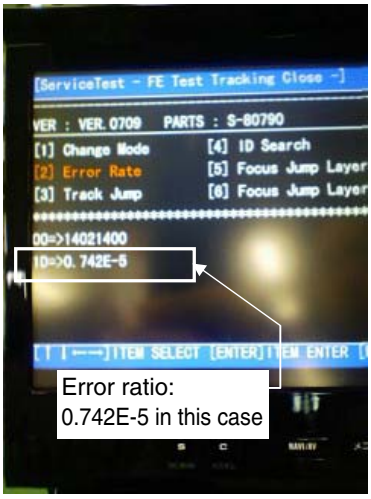

5.3 DIAGNOSIS FLOWCHART FOR DVD UNIT

Refer to the DVD Mechanism Module Manual CX-3310 (CRT5669).

5.4 ERROR CODE LIST

Error status	OSD *1	UART *2	Meaning	Method of reset			
				ACC Off/On	Source Off/On	Eject/ With no device	Play Key
Media Error	UNPLAYABLE DISC	00h	A disc containing the unplayable format only	X	X	X	-
Read Error	ERROR-02-99	20h	Transfer start error	X	X	X	X
Focus Error(Focus Error in mechanism set up)	ERROR-02-90	21h	Focus error	X	X	X	X
Surface Error	ERROR-02-9E	22h	Focus error during set up (A focus has never been achieved with that disc)	-	-	X	-
Address not found (Invalid Track)	ERROR-02-80	23h	Address not found	X	X	X	X
Spindle Lock	ERROR-02-91	24h	Spindle lock NG(the disc cannot rotate)	X	X	X	X
Carriage HOME	ERROR-02-92	25h	Carriage home NG (The pick up tries to return to carriage home, but it cannot go back and stopped)	X	X	X	X
ID/SUBCODE Read Error	ERROR-02-94	26h	ID/SUBCODE Read Error (ID/SUBCODE cannot be read due to scratch or stain)	X	X	X	X
AV CHIP decode Error	ERROR-02-9A	2Ah	AV CHIP decode NG(AV chip cannot be decoded)	X	X	X	X
AV CHIP Recovery NG	ERROR-02-9B	2Bh	AV CHIP recovery NG	X	X	X	X
Error of PLAY BACK Mode Status	ERROR-02-9C	2Ch	Playback state error (An error due to software bug)	X	X	X	X
Disc Data Error	ERROR-02-9D	2Dh	Disc Data NG	X	X	X	X
Temp Error (In Case of High Temperature)	THERMAL PROTECTION IN MOTION	30h	High temperature(Playback is stopped because the pickup is high temperature)	X	-	-	-
No Disc (including Disc loading and ejecting)	(No display)	40h	Disc has not been inserted (Including Load in process or Eject in process)	*	*	*	*
Loading_Mecha Error	(No display)	50h	Loading mechanism error (The disc cannot be clamped)	X	-	X	-
DRM Error	PROTECTED DISC	70h	DRM error (All music cannot be played back due to DRM)	X	X	X	-
Region code Error	DIFFERENT REGION DISC	90h	Region code NG (Unable to be played back due to incorrect mechanism region)	X	X	X	-
CPRM*7 Key Error *8	UNPLAYABLE DISC	93h	Key Error for playback	X	X	X	-
REQUEST Error	ERROR-02-A0	A0h	REQUEST_error	X	X	X	X
Failure in issuing read command (chip dependent)	ERROR-02-A1	A1h	Failure in issuing the read command	X	X	X	X
Adjustment of L0 is NG	ERROR-02-A2	A2h	L0 adjustment is NG	X	X	X	X
Adjustment of L1 is NG	ERROR-02-A3	A3h	L1 adjustment is NG	X	X	X	X
LD system NG	ERROR-02-A4	A4h	LD system NG	X	X	X	X
Gain adjustment system NG	ERROR-02-A5	A5h	Gain adjustment system NG	X	X	X	X
Gain determining system NG	ERROR-02-A6	A6h	Gain determining system NG	X	X	X	X
Servo initial setting related items NG	ERROR-02-A7	A7h	Servo initial setting related items NG	X	X	X	X
Disc is not clamped yet	ERROR-02-A8	A8h	Disc is not clamped yet	X	X	X	X
Tracking system NG	ERROR-02-A9	A9h	Tracking system NG	X	X	X	X
Media setting system NG	ERROR-02-AA	AAh	Media setting system NG	X	X	X	X
Focus Error	ERROR-02-AB	ABh	JUMP over layers NG	X	X	X	X
Error of PLAY BACK Mode Status	ERROR-02-B0	B0h	Navigation command error	X	X	X	X
Error of PLAY BACK Mode Status	ERROR-02-B1	B1h	Retry over	X	X	X	X
DivX DRM Information Update Error *10	ERROR-02-C1	C1h	DivX DRM inofrmation update error	X	-	-	-
Undefined Error	ERROR-FF-FF	FFh	Undefined error	X	X	X	X

X : Cancel the error by operation. - : Error is not cancelled by operation. * : No setting

*1 A content displayed on OSD. As for the items having multiple display patterns, the upper row is for the Japanese version Full GUI, and the lower row is for the Touch Panel model and Full GUI (English version).

*2 A parameter of UART command, such as “receipt error notice”, that the DVD mechanism transmits.

*7 CPRM(Content Protection for Recordable Media) : A copyright protection technique for digital contents used for re-writable DVD or memory card.

*8 DVD-VR model only.

*10 This occurs when the DRM information update notice is sent from the DVD mecha but no DRM information update response is returned.

Common

AMP Error

→ This product fails to operate or the speaker connection is incorrect; the protective circuit is activated.
— Check the speaker connection.
— Check the power IC and its peripheral circuit.

Product overheat. System will be shut down automatically in 1 minute. Restart the product by ACC Off/On may fix this problem. If this message keep showing up, it is possible that some problem occurred in the product.

→ The temperature is too high for this product to operate.
— Follow the instructions displayed on the screen. If this does not solve the problem, contact your dealer or an authorized Pioneer Station for assistance.

Pandora

Error-19

→ Communication failed.
— Disconnect the cable from the iPod. Once the iPod's main menu is displayed, reconnect the iPod and reset it.

Skip limit reached.

→ Skip limit reached.
— Do not exceed the skip limit.
— Due to music licensing restrictions, Pandora limits the total number of skips per hour.

Check Device

→ Device error message displayed in Pandora application.
— Please check your connected device.

Incompatible USB

→ The connected USB storage device is not supported by this product.
— Disconnect your device and replace it with a compatible USB storage device.

Check USB

→ The USB connector or USB cable has short-circuited.
— Check that the USB connector or USB cable is not caught in something or damaged.

→ The connected USB storage device consumes more than maximum allowable current.
— Disconnect the USB storage device and do not use it. Turn the ignition switch to OFF, then to ACC or ON and then connect a compliant USB storage device.

Disc

Error-02-XX/FF-FF

→ The disc is dirty.
— Clean the disc.

→ The disc is scratched.
— Replace the disc.

→ The disc is loaded upside down.
— Check that the disc is loaded correctly.

→ There is an electrical or mechanical error.
— Press the **RESET** button.

Different Region Disc

→ The disc does not have the same region number as this product.
— Replace the DVD with one bearing the correct region number.

Unplayable Disc

→ This type of disc cannot be played on this product.
— Replace the disc with one that can be played on this product.

Unplayable File

→ This type of file cannot be played on this product.
— Select a file that can be played.

Skipped

→ The inserted disc contains DRM protected files.
— The protected files are skipped.

Protect

→ All the files on the inserted disc are embedded with DRM.
— Replace the disc.

TEMP

→ The temperature of this product is outside the normal operating range.
— Wait until this product returns to a temperature within the normal operating limits.

This DivX rental has expired.

→ The inserted disc contains expired DivX VOD content.
— Select a file that can be played.

Video resolution not supported

→ Files that cannot be played on this product are included in the file.
— Select a file that can be played.

Unable to write to flash memory.

→ The playback history for VOD contents cannot be saved for some reason.
— Retry.
— If the message appears frequently, consult your dealer.

Your device is not authorized to play this DivX protected video.

→ This product's DivX registration code has not been authorized by the DivX VOD contents provider.
— Register this product to the DivX VOD contents provider.

Video frame rate not supported

→ DivX file's frame rate is more than 30 fps.
— Select a file that can be played.

Audio Format not supported

→ This type of file is not supported on this product.
— Select a file that can be played.

USB storage device

Error-02-9X/-DX

→ Communication failed.
— Turn the ignition switch OFF and back ON.
— Disconnect the USB storage device.
— Change to a different source. Then, return to the USB storage device.

Unplayable File

→ This type of file cannot be played on this product.
— Select a file that can be played.

→ Security for the connected USB storage device is enabled.
— Follow the USB storage device instructions to disable security.

Skipped

→ The connected USB storage device contains DRM protected files.
— The protected files are skipped.

Protect

→ All the files on the connected USB storage device are embedded with DRM.
— Replace the USB storage device.

Incompatible USB

→ The connected USB storage device is not supported by this product.
— Disconnect your device and replace it with a compatible USB storage device.

Check USB

→ The USB connector or USB cable is short-circuited.
— Check that the USB connector or USB cable is not caught in something or damaged.

→ The connected USB storage device consumes more than maximum allowable current.
— Disconnect the USB storage device and do not use it. Turn the ignition switch to OFF, then to ACC or ON and then connect a compliant USB storage device.

Video resolution not supported

→ Files that cannot be played on this product are included in the file.
— Select a file that can be played.

USB was disconnected for device protection. Do not re-insert this USB memory into the unit. Please reset the unit.
→ The USB connector or USB cable is short-circuited.
— Check that the USB connector or USB cable is not caught in something or damaged.
→ The connected USB storage device consumes more than maximum allowable current.
— Disconnect the USB storage device and do not use it. Turn the ignition switch to OFF, then to ACC or ON and then connect a compliant USB storage device.
→ The USB interface cable for iPod / iPhone is short-circuited.
— Confirm that the USB interface cable for iPod / iPhone or USB cable is not caught in something or damaged.

Audio Format not supported
→ This type of file is not supported on this product.
— Select a file that can be played.

iPod

Error-02-6X/-9X/-DX
→ iPod failure.
— Disconnect the cable from the iPod. Once the iPod's main menu is displayed, reconnect the iPod and reset it.

Error-02-67
→ The iPod firmware version is old.
— Update the iPod version.

iTunes tagging

Error-8D
→ Built-in FLASH ROM encountered an error.
— Turn the ignition switch to OFF and then to ON.

Tag store failed.
→ Tag information cannot be stored in this product.
— Try again.

Already stored.
→ This tag information is already stored in memory.
— Tag information can only be saved once for any given song. Tag information cannot be saved for the same song more than once.

Memory full. Connect iPod.
→ The tag information is successfully stored. The flash memory of this product has become full.
— The tag information on this product is transferred to the iPod automatically when an iPod is connected.

Memory full. Tags not stored. Connect iPod.
→ This product's flash memory used as the temporary storage area is full.
— The tag information on this product is transferred to the iPod automatically when an iPod is connected.

iPod full. Tags not transferred.
→ Memory used for tag information on the iPod is full.
— Sync the iPod with iTunes and clean up the tagged playlist.

Tag transfer failed. Reconnect your iPod.
→ This product's tag information cannot transfer to the iPod.
— Check the iPod and try again.

Bluetooth

Error-10
→ The power failed for the Bluetooth module of this product.
— Turn the ignition switch to OFF and then to ON.
If the error message is still displayed after performing the above action, please contact your dealer or an authorized Pioneer Service Station.

MirrorLink

The application list could not be read out.
→ Failed to load the application list.
— Disconnect the cable from the smartphone, and then connect the smartphone again after a few seconds.
— Turn the ignition switch to OFF and then to ON.
If the error message is still displayed after performing the above action, reset the smartphone.
If the error message is still displayed after performing the above action, please contact your dealer or an authorized Pioneer Service Station.

There is no supported application on your MirrorLink device.
→ No supported applications can be found.
— Install **MirrorLink** compliant applications to your **MirrorLink** device.

Communication error occurred.
→ There was a communication error.
— Disconnect the cable from the smartphone, and then connect the smartphone again after a few seconds.
— Turn the ignition switch to OFF and then to ON.
If the error message is still displayed after performing the above action, reset the smartphone.
If the error message is still displayed after performing the above action, please contact your dealer or an authorized Pioneer Service Station.

Launching the application failed.
→ Failed to launch the application.
— Try again.

Failed to display the screen of your device because of irregular resolution.
→ The image size is too large.
— The size of the images transferred from the device exceeds 800 × 480.

5.5 CONNECTOR FUNCTION DESCRIPTION

1. VIDEO INPUT
2. REAR VIEW CAMERA INPUT
3. AUDIO INPUT L
4. AUDIO INPUT R
5. FRONT OUTPUT L
6. FRONT OUTPUT R
7. REAR OUTPUT L
8. REAR OUTPUT R
9. SUBWOOFER OUTPUT L
10. SYBWOOFER OUTPUT R

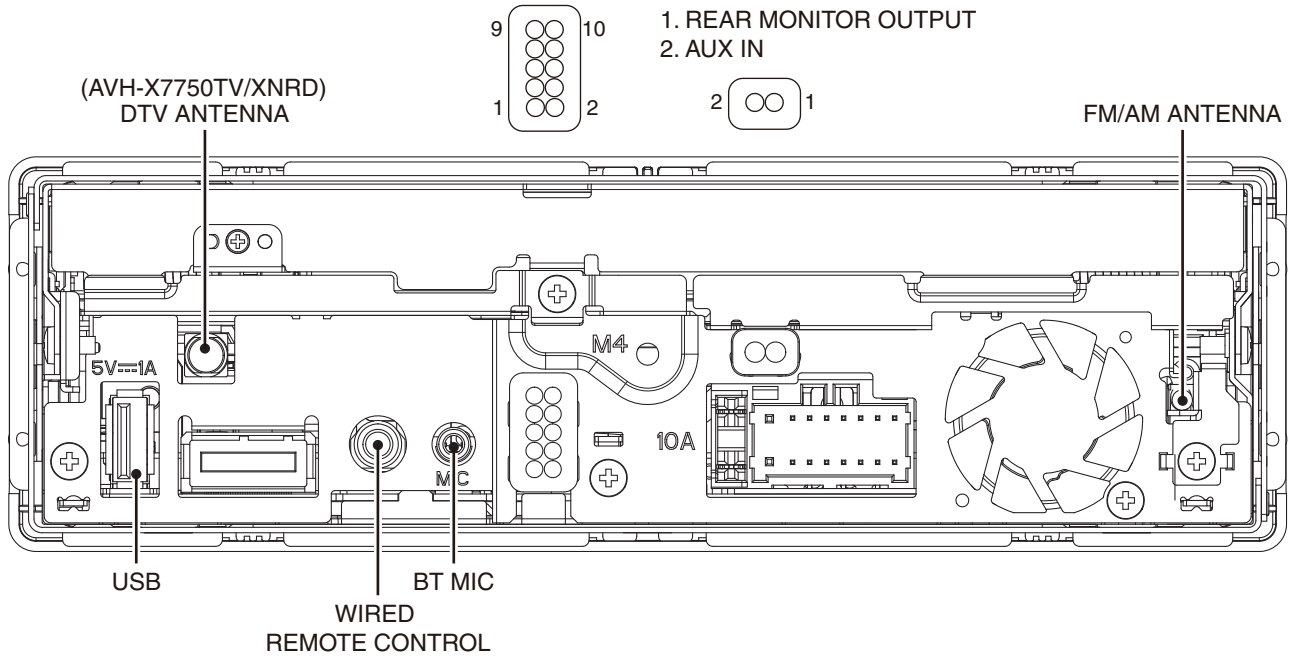

USB

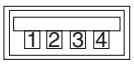

1 : USB5V
2 : USB D-
3 : USB D+
4 : GND

NAVI INTERFACE

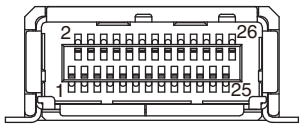

1 : CCR	10 : CCAUL	19 : DSEN
2 : CCG	11 : CCAUR	20 : TVON
3 : CCB	12 : GNDAU	21 : GUIDE ON
4 : CSYNC	13 : ONSEI+	22 : MONON
5 : GNDSIG	14 : ONSEI-	23 : IP5V
6 : HSYNC	15 : IPSDA	24 : SYS TO NAVI
7 : GNDD	16 : IPSCL	25 : NAVI TO SYS
8 : VSYNC	17 : NC	26 : GNDD
9 : ASENBO	18 : IPVCLK	

POWER SUPPLY

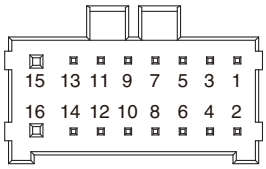

1. FL+	9. P. BRAKE
2. FR+	10. TELMUTE
3. FL-	11. ILM
4. FR-	12. BREM/AANT
5. RL+	13. ACC
6. RR+	14. REV
7. RL-	15. B.UP
8. RR-	16. GND

5.6 MECHANICAL DESCRIPTION

• Overview of FLAP operation

1. FLAP is operated by two motors; motor for backward and forward drive (EXA4013) and motor for angle drive (EXA4013).
2. To detect the operating status of angle and the operating position, the analog potential generated from angle encoder is detected.
3. The angle last position memory function memorizes the last position into MCU using 256 resolution STEP of VDD.
4. To detect the horizontal operating status, the analog signal of O/C/D SW* is detected.
5. At the reset start, the ejection operation is carried out and the system enters the startup status after entering storage status once.
6. The angle is adjusted with angle keys (+/-).
7. OPEN/CLOSE key stores and ejects the monitor. Temporary folding key temporarily folds the monitor.
8. On the navigation menu screen, monitor automatic storage ejection ON/OFF and setback ON/OFF when ACC is turned ON/OFF are set.

*O/C/D SW
Detection by OPENSW, CLOSESW and DEG0SW are consolidated to one pin and the signal is detected as an analog signal.

Status	Description	OPENSW	CLOSESW	DEG0SW	O/C/D SW analog signal (AD)	O/C/D SW voltage (V) MIN	TYP	MAX
1	Storage position	OFF	OFF	OFF	E8H ~ FFH	3.00	3.25	—
2	Horizontal indefinite position (angle 0 degree)	ON	ON	OFF	64H ~ 8CH	1.29	1.52	1.82
3	Eject position	OFF	ON	OFF	BAH ~ E7H	2.40	2.67	2.99
4	Rising	OFF	ON	ON	27H ~ 63H	0.51	1.02	1.28
5	Setback	ON	ON	ON	00H ~ 26H	—	0.00	0.50
5	Horizontal indefinite position (except angle 0 degree)	ON	ON	ON				
6	20mm before storage position	ON	OFF	OFF	8DH ~ B9H	1.82	2.07	2.39

• Description of FLAP ejection operation

(1) When OPEN key is pressed or the automatic switching setting is turned ON, the motor for angle drive is rotated in 0° direction for 500 ms (pushing operation is carried out) after ACC is set to ON.

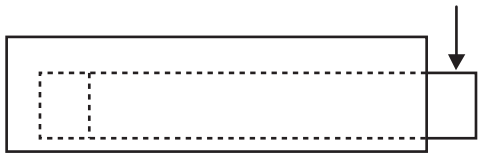

(2) In 500 ms, the motor for angle drive is stopped and the motor for backward and forward drive is rotated in ejection direction.

(3) If the status of analog signal of O/C/D SW changes from 2 to 3, the motor for backward and forward drive is continuously rotated in ejection direction for 600 ms.

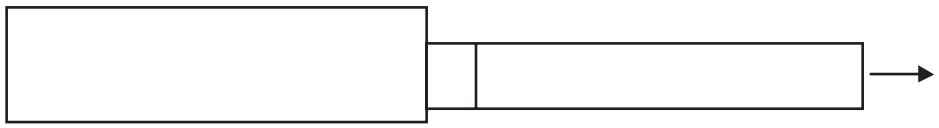

(4) In 600 ms, the motor for backward and forward drive is stopped and the motor for angle drive is rotated in UP direction.

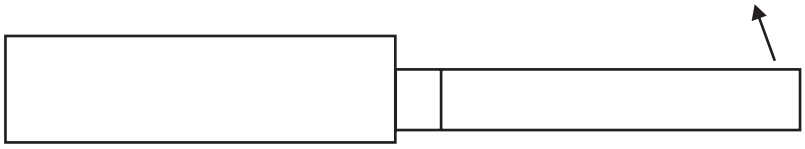

(5) If the angle VOL voltage becomes approximately 90° voltage, the motor for angle drive is braked and the ejection is completed. (If the previous angle is memorized, the system operates at the angle)

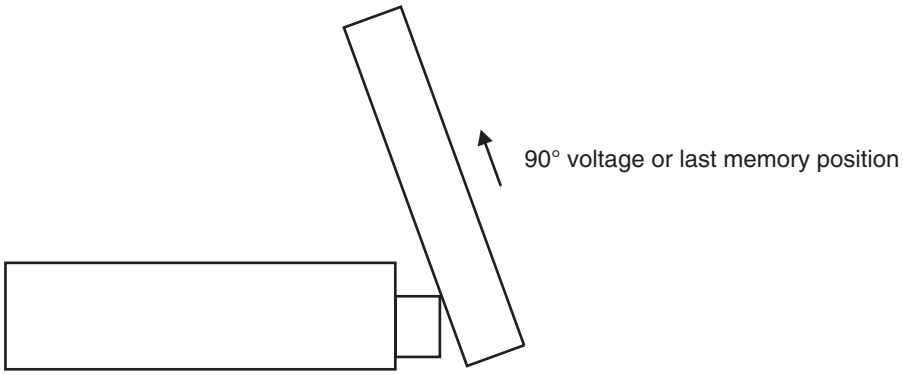

(6) If the setback setting is turned ON, the motor for angle drive is braked after the monitor angle voltage reaches the previous angle memory, and then the motor for backward and forward drive is rotated in the storage direction at low speed. After that, if the status of analog signal of O/C/D SW changes from 4 to 5, the motor for backward and forward drive is stopped.

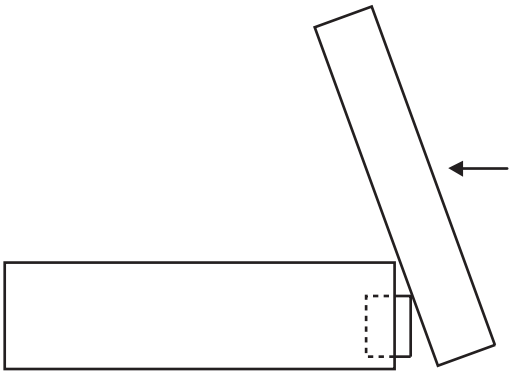

(7) To remove the backlash of gear, the motor for backward and forward drive is rotated in horizontal ejection direction for 32ms, and then it is stopped.

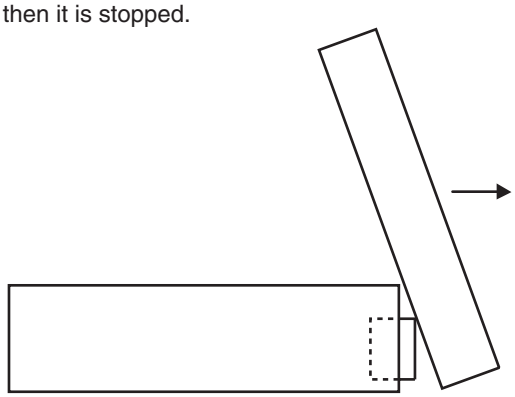

• Description of FLAP storage operation

(1) When CLOSE key is pressed or the automatic switching setting is turned ON, the motor for angle drive is rotated in 0° direction in 6 seconds after ACC is set to ON. When the setback setting is turned ON, the motor for backward and forward drive is rotated in ejection direction at high speed. If the status of analog signal of O/C/D SW changes from 5 to 4, the motor is continuously rotated for 600 ms, and then the motor for angle drive is rotated in 0° direction.

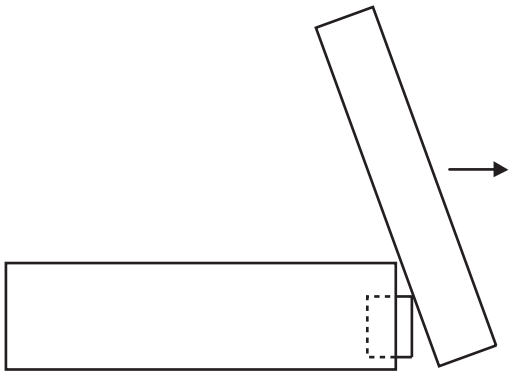

(2) After the status of analog signal of O/C/D SW changes from 4 to 3, the motor for angle drive is rotated in 0° direction for 900 ms and the pushing operation is carried out.

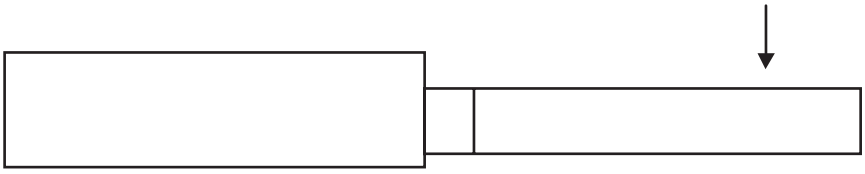

(3) In 900 ms, the motor for angle drive is braked and the motor for backward and forward drive is rotated in storage direction.

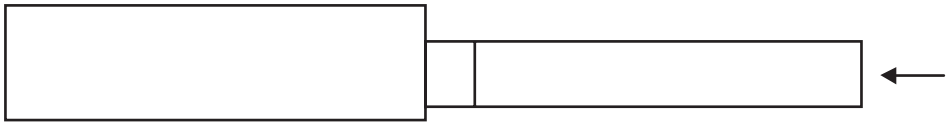

(4) If the status of analog signal of O/C/D SW changes from 2 to 6, the motor for backward and forward drive is rotated in storage direction at low speed.

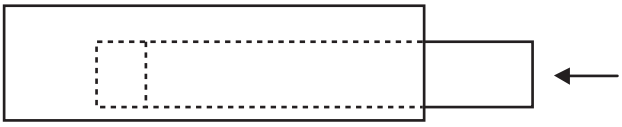

(5) In 700ms after the status of analog signal of O/C/D SW changes from 6 to 1, the motor is braked and the monitor storage is completed.

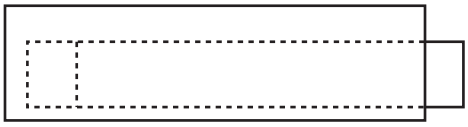

• Description of FLAP angle adjustment

(1) From the monitor stop position, the motor for angle drive is rotated in UP direction and DOWN direction by + key and - key, respectively. If you keep pressing the key, the monitor continuously moves between approximately 50° and 100° in non-step manner. If you press the key when the setback setting is turned ON, the motor for backward and forward drive is rotated in horizontal ejection direction. In 600 ms after the status of analog signal of O/C/D SW changes from 5 to 4, the angle voltage is changed for the effective portion of angle adjustment key to adjust the angle. In 3 seconds after the adjustment, the motor for backward and forward drive is rotated in horizontal storage direction at low speed. If the status of analog signal of O/C/D SW changes from 4 to 5, the motor is braked.

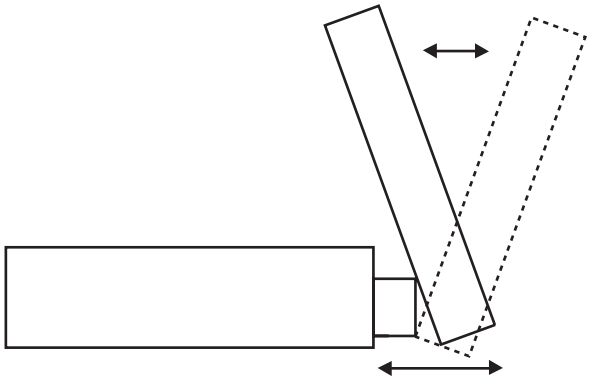

• Description of FLAP temporary folding operation

(1) If you press the temporary folding key from the monitor stop position, the motor for angle drive is rotated in 0° direction. If you press the key when the setback setting is turned ON, the motor for backward and forward drive is rotated. In 600 ms after the status of analog signal of O/C/D SW changes from 5 to 4, the motor is braked, and then the motor for angle drive is rotated in 0° direction.

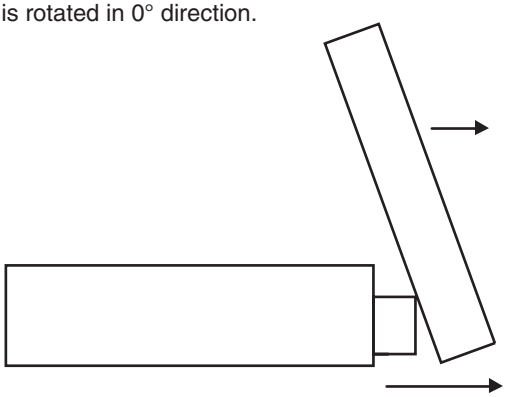

(2) After the status of analog signal of O/C/D SW changes from 4 to 3, the motor for angle drive is rotated for 900 ms and the monitor is stopped at the horizontal position by brake. In 7 seconds after this operation, the navigation operation sound is output 3 times in 1-second intervals. In 10 seconds, the motor for angle drive rotates in angle UP direction and it is stopped at the last memory position by brake. If the setback setting is turned ON, the motor for angle drive stops at the last memory position, and then the motor for backward and forward drive rotates in horizontal storage direction at low speed. After the status of analog signal of O/C/D SW changes from 4 to 5, the motor stops.

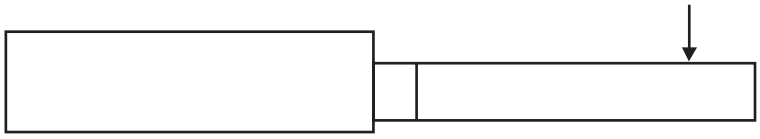

• Precautions on FLAP operation

1. The angle position always checks the angle voltage and memorizes the last memory depending on increase and decrease of voltage. However, if the monitor is forcibly moved with a hand etc., it is not memorized.
2. If the analog signal of O/C/D SW does not change within the specified time during the horizontal operation, the system stops at the position.

• BackUp instantaneous interruption, operation by ON/OFF of Acc

Status of FLAP		Automatic switching setting OFF			Automatic switching setting ON				
		BackUp instantaneous interruption	(1) Acc OFF	(1) → Acc ON	BackUp instantaneous interruption	(2) Acc OFF, Less than 6 seconds after Acc is turned OFF	(2) → ON	(3) In 6 seconds after Acc is turned OFF	(3) → ON
0	FLAP position indefinite stop				Nothing is changed	Nothing is changed	Nothing is changed	FLAP position Identifying operation started	Not in this status
1	Resetting the setback for identifying FLAP position				Operation continued	Operation continued	Operation continued	Operation continued	Not in this status
2	Flopping for identifying FLAP position				Operation continued	Operation continued	Operation continued	Operation continued	Not in this status
3	Storing for identifying FLAP position				Operation continued	Operation continued	Operation continued	Operation continued	Not in this status
4	Close stop	Nothing is changed	Nothing is changed (immediate standby)	Nothing is changed	Nothing is changed	Nothing is changed (System does not enter standby status. However, the system immediately enters standby status if Acc is turned OFF at close stop immediately after the position is identified)	Nothing is changed	Nothing is changed (to standby)	Changes depending on automatic switching setting / position
5	Stop avoiding obstacle in horizontal direction	Nothing is changed	Nothing is changed (immediate standby)	Nothing is changed	Nothing is changed	Nothing is changed (System does not enter standby status.)	Nothing is changed	Nothing is changed	Nothing is changed
6	Ejecting	Operation continued	Operation continued	Operation continued	Operation continued	Operation continued	Operation continued	Closing operation started	Not in this status
7	Forcibly ejecting	Operation continued	Operation continued	Operation continued	Operation continued	Operation continued	Operation continued	Operation continued (close after forcible ejection)	Not in this status
8	Rising	Operation continued	Operation continued	Operation continued	Operation continued	Operation continued	Operation continued	Closing operation started	Not in this status
9	Open stop	Nothing is changed	Nothing is changed (immediate standby)	Nothing is changed	Nothing is changed	Nothing is changed	Nothing is changed	Closing operation started	Not in this status
10	Stop avoiding obstacle in vertical direction	Nothing is changed	Nothing is changed (immediate standby)	Nothing is changed	Nothing is changed	Nothing is changed (System does not enter standby status.)	Nothing is changed	Nothing is changed (to standby)	Opening operation started
11	Setback shifting	Operation continued	Operation continued	Operation continued	Operation continued	Operation continued	Operation continued	Closing operation started	Not in this status
12	Setback resetting	Operation continued	Operation continued	Operation continued	Operation continued	Operation continued	Operation continued	Operation continued (close after reset)	Not in this status
13	Angle increasing	Operation stop	Operation stop	Nothing is changed	Operation stop	Operation stop	Nothing is changed	Closing operation started	Not in this status
14	Angle decreasing	Operation stop	Operation stop	Nothing is changed	Operation stop	Operation stop	Nothing is changed	Closing operation started	Not in this status
15	Waiting for angle adjustment	Nothing is changed (angle adjustment wait time continued)	Nothing is changed (angle adjustment wait time continued)	Nothing is changed (angle adjustment wait time continued)	Nothing is changed (angle adjustment wait time continued)	Nothing is changed (angle adjustment wait time continued)	Nothing is changed (angle adjustment wait time continued)	Closing operation started	Not in this status
16	Temporary folding shifting	Operation continued	Operation continued	Operation continued	Operation continued	Operation continued	Operation continued	Closing operation started	Not in this status
17	Temporary folding stop	Nothing is changed (temporary folding waiting time continued)	Nothing is changed (temporary folding waiting time continued)	Nothing is changed (temporary folding waiting time continued)	Nothing is changed (temporary folding waiting time continued)	Nothing is changed (temporary folding waiting time continued)	Nothing is changed (temporary folding waiting time continued)	Closing operation started	Not in this status
18	Temporary folding resetting	Operation continued	Operation continued	Operation continued	Operation continued	Operation continued	Operation continued	Closing operation started	Not in this status
19	Flopping	Operation continued	Operation continued	Operation continued	Operation continued	Operation continued	Operation continued	Operation continued	Operation continued
20	Storing	Operation continued	Operation continued	Operation continued	Operation continued	Operation continued	Operation continued	Operation continued	Operation continued

6. SERVICE MODE

6.1 MONITOR TEST MODE

MONITOR TEST MODE MENU SCREEN

Method for Mode IN

While pressing [SRC] + [MODE] key, restart the system.

Display specification

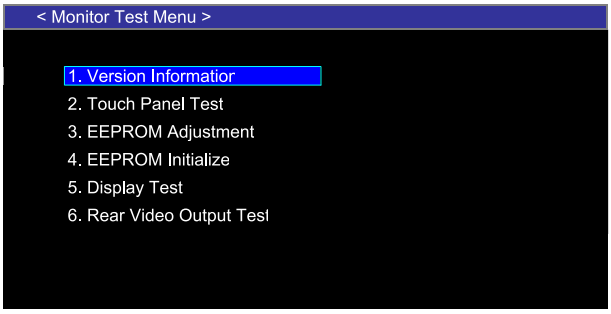

Operational description	Remote controller key
Selection cursor up movement	Up ▲
Selection cursor down movement	Down ▼
Menu enter	Band

1. Version Information

Method for Mode IN

While pressing [Mute] + [Reverse] key, restart the system.
Choose “1. Version Information” among the Monitor Test Menu screen.

Display specification

Page: 1

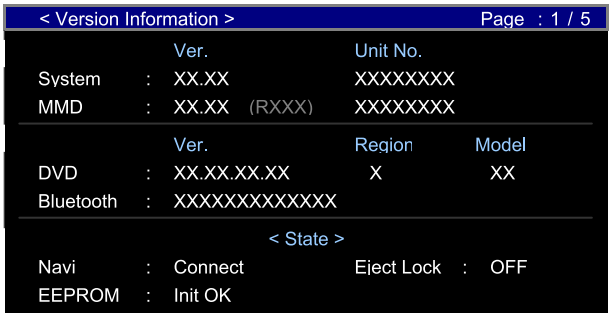

<Navi>
When Navi is connected : Connect
When Navi is not connected : -
<EEPRM>
When set value initialization is performed normally : Init OK
When set value initialization is not performed normally : -
<Eject Lock>
When Eject Lock is on : ON
When Eject Lock is canceled : OFF

Operational description	Remote controller key
Return to test mode menu	RETURN
Page up	NEXT
Page down	PREV

Page: 2

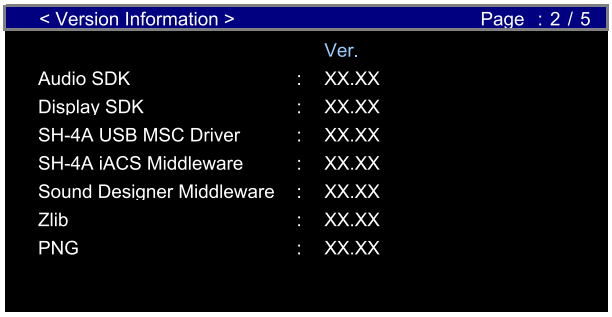

Page: 3

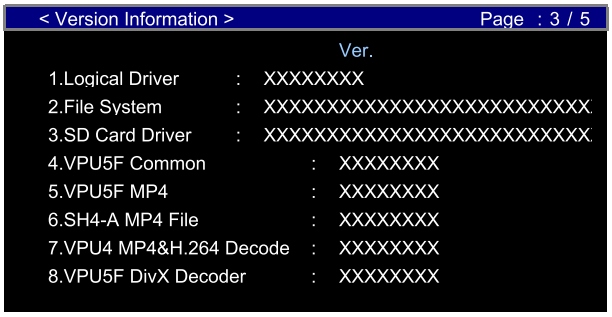

Page: 4

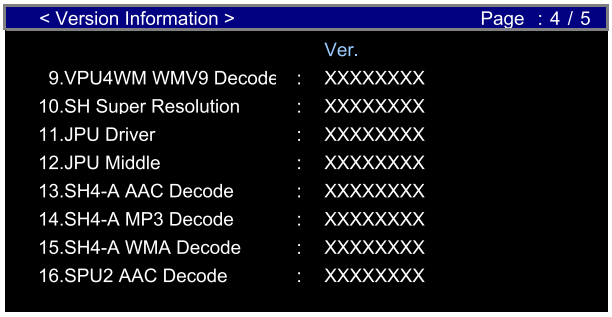

Page: 5

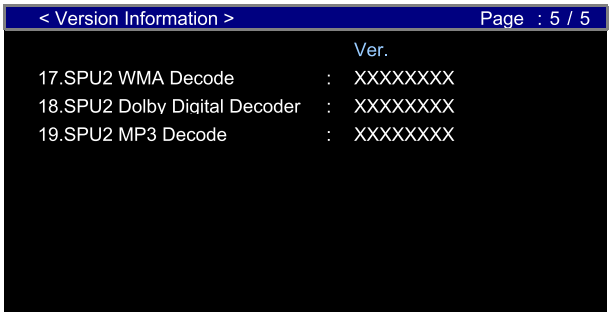

2. Touch Panel Test

Method for Mode IN

While pressing [Mute] + [Reverse] key, restart the system.
Choose “2. Touch Panel Test” among the Monitor Test Menu screen.

Display specification

Top menu

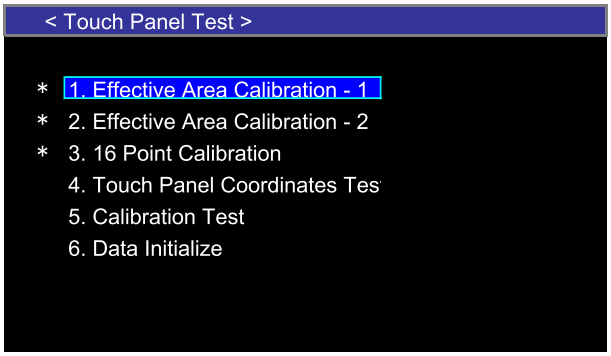

◆ Condition that the mark meaning adjustment is completed, (*) is lit
(the mark is lit when any of one condition is satisfied)
◇ Outermost circle check -1
• When “Outermost circle check of line calibration-1” is finished normally
• When “Outermost circle check of line calibration-2” is finished normally
-> Since “Outermost circle check of line calibration-2” includes “Outermost circle check of line calibration-1.”
◇ Outermost circle check -2
• When “Outermost circle check of line calibration-2” is finished normally
◇ Calibration check
• When “Calibration check of line calibration” is finished normally

◆ Condition that the mark meaning adjustment is completed, (*) is extinguished
(the mark is extinguished when any of one condition is satisfied)
◇ Outermost circle check -1
• When “conditions that the mark is lit” are not satisfied
• When “Data Initialize is executed”
• When “EEPROM initialize is executed”
◇ Outermost circle check -2
• When “conditions that the mark is lit” are not satisfied
• When “Outermost circle check of line calibration-1” is finished abnormally
-> Since “Outermost circle check of line calibration-2” includes “Outermost circle check of line calibration-1.”
• When “Data Initialize is executed”
• When “EEPROM initialize is executed”
◇ Calibration check
• When “conditions that the mark is lit” are not satisfied
• When “Data Initialize is executed”
• When “EEPROM initialize is executed”

Operational description	Remote controller key
Return to test mode menu	RETURN
Selection cursor up movement	Up ▲
Selection cursor down movement	Down ▼
Menu enter	Band

1. Effective Area Calibration - 1

Outermost circle check screen

First point

Second point

Operational description	Remote controller key
Check is interrupted	Band

Outermost circle check result screen

Finished normally

Finished abnormally

Operational description	Remote controller key
Check is finished	Band

2. Effective Area Calibration - 2

Outermost circle check screen

First point

Second point

3rd point

4th point

Operational description	Remote controller key
Check is interrupted	Band

Outermost circle check result screen

Finished normally

Finished abnormally

Operational description	Remote controller key
Check is finished	Band

3. 16 Point Calibration

Calibration check screen

Touch the cursor [+] displayed on the screen. By touching it correctly, it disappears and another cursor appears.
By repeating this action 16 times, obtain calibration value of each [+].
When touching the last 17th cursor, calibration values at 16 points and information of normal finish in 17 bytes are written in EEPROM and the screen returns to TOP menu by pressing a key.

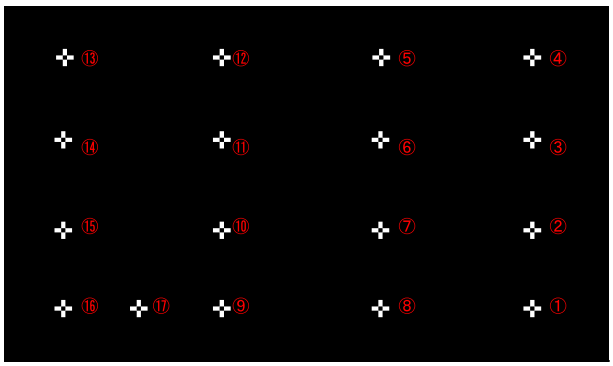

Operational description	Remote controller key
Return to top menu	Band

Calibration check result screen

Operational description	Remote controller key
Return to top menu	Band

4. Touch Panel Coordinates Test

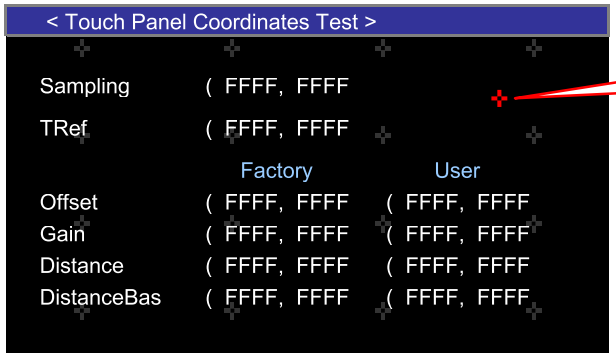

[+] is displayed at a touched place.
(Two [+] are displayed by touching two places.)

Operational description	Remote controller key
Return to top menu	RETURN

5. Calibration Test

Calibration confirmation screen

Touch the cursor [+] displayed on the screen. By touching it correctly, it disappears and another cursor appears. Otherwise, the cursor is displayed in red.
Repeating this action for 4 points and by pressing the last 4th point, “O.K.” is displayed.

Operational description	Remote controller key
Return to top menu	RETURN

Calibration confirmation result screen

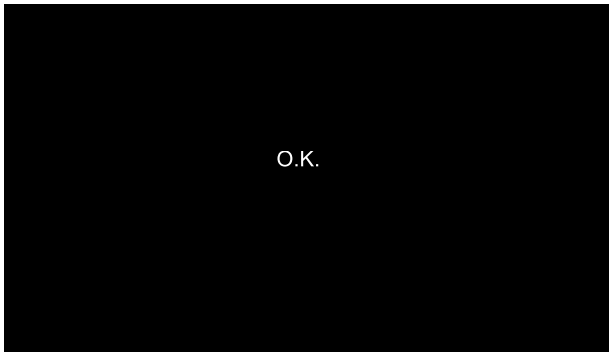

Operational description	Remote controller key
Return to top menu	RETURN

6. Data Initialize

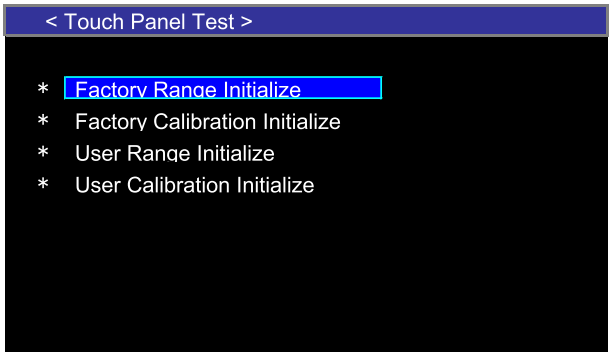

◆ Condition that the mark meaning adjustment is completed, (*) is lit
(the mark is lit when any of one condition is satisfied)

◇ Outermost circle check
- When “Outermost circle check of line calibration-1” is finished normally
- When “Outermost circle check of line calibration-2” is finished normally

◇ Calibration check
- When “Calibration check of line calibration” is finished normally

◇ Outermost circle check of user calibration
- When “Outermost circle check of user calibration” is finished normally

◇ User calibration check
- When “Calibration check of user calibration” is finished normally

◆ Condition that the mark meaning adjustment is completed, (*) is extinguished
(the mark is extinguished when any of one condition is satisfied)

◇ Outermost circle check
- When “conditions that the mark is lit” are not satisfied
- When “Data Initialize is executed”
- When “EEPROM initialize is executed”

◇ Calibration check
- When “conditions that the mark is lit” are not satisfied
- When “Data Initialize is executed”
- When “EEPROM initialize is executed”

◇ Outermost circle check of user calibration
- When “conditions that the mark is lit” are not satisfied
- When “Data initialize is executed”
- When “EEPROM initialize is executed”
- When Outermost circle check of line calibration or 16-point adjustment is finished normally after Outermost circle check of user calibration is finished normally

◇ User calibration check
- When “conditions that the mark is lit” are not satisfied
- When “Data initialize is executed”
- When “EEPROM initialize is executed”
- When Outermost circle check of line calibration or 16-point adjustment is finished normally after 16-point adjustment of user calibration is finished normally

Operational description	Remote controller key
Return to test mode menu	RETURN
Selection cursor up movement	Up ▲
Selection cursor down movement	Down ▼
Menu enter	Band

3. EEPROM Adjustment

Method for Mode IN

Choose “3. EEPROM Adjustment” among the Monitor Test Menu screen.

Display specification

Top menu

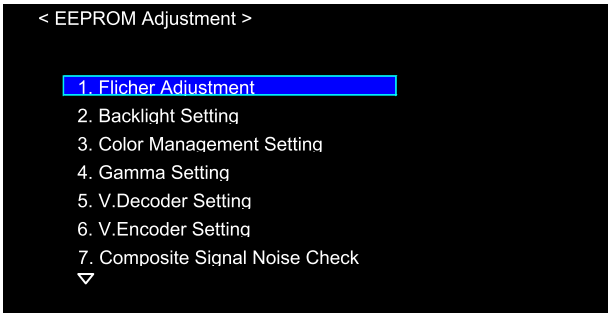

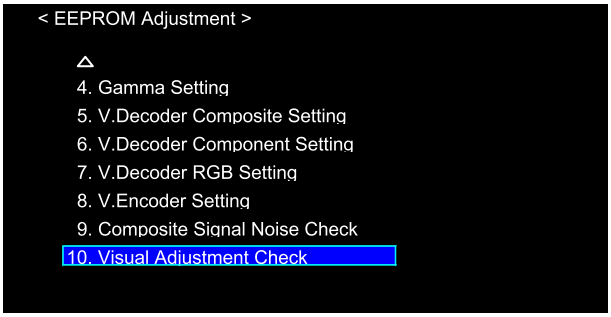

Operational description	Remote controller key
Return to test mode menu	RETURN
Selection cursor up movement	Up
Selection cursor down movement	Down
Menu enter	Band

1. Flicker Adjustment

1 dot stripe image of black and gray (50% white) will appear.
Adjust the number to minimize the flicker.

Operational description	Remote controller key
Return to top menu	RETURN
-1	REV
+1	FF

Following items in EEPROM Adjustment menu are not used on service.

4. EEPROM Initialize

Method for Mode IN

Choose “4. EEPROM Initialize” among the Monitor Test Menu screen.

Display specification

Confirmation screen

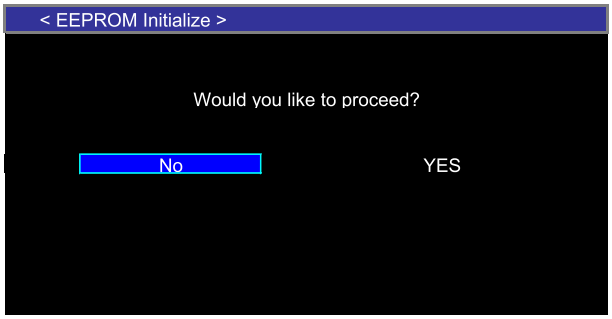

Operational description	Remote controller key
Return to test mode menu	RETURN
Selection cursor left movement	REV
Selection cursor right movement	FF
Menu enter	Band

5. Display Test

Method for Mode IN

Choose “5. Display Test” among the Monitor Test Menu screen.

Display specification

Top menu

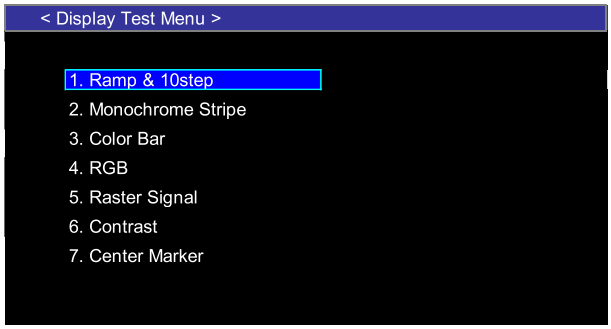

Operational description	Remote controller key
Return to test mode menu	RETURN
Selection cursor up movement	Up
Selection cursor down movement	Down
Menu enter	Band

1. Ramp & 10step

Display of step signals and signals for alpha blend check.

Right-white 64step

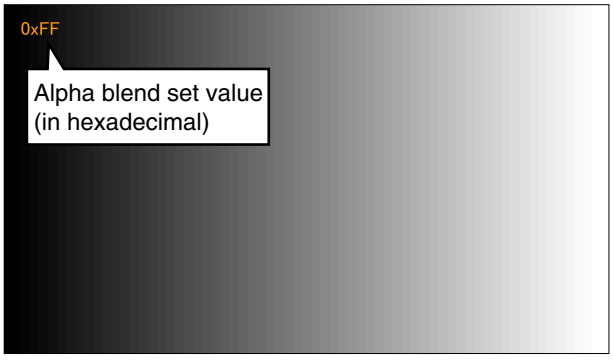

Operational description		Remote controller key
Return to test mode menu		RETURN
Alpha blend Up	(+0x10)	Up
Alpha blend Down	(-0x10)	Down
Alpha blend Up	(+0x01)	FF
Alpha blend Down	(-0x01)	REV
Pattern change		Band

2. Monochrome Stripe

Display of monochrome stripe signals.

Monochrome stripe (Vertical)

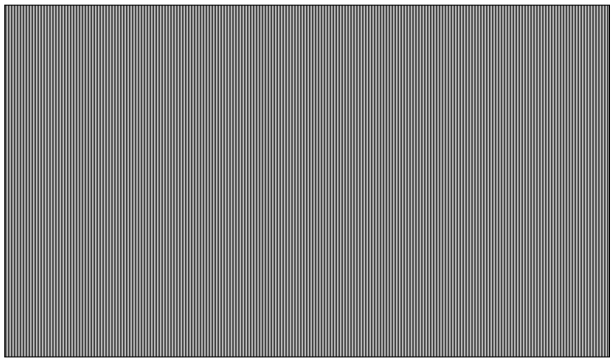

Operational description	Remote controller key
Return to test mode menu	RETURN
Pattern change	Band

3. Color Bar

Display of color bar signals.

Color bar (Vertical)

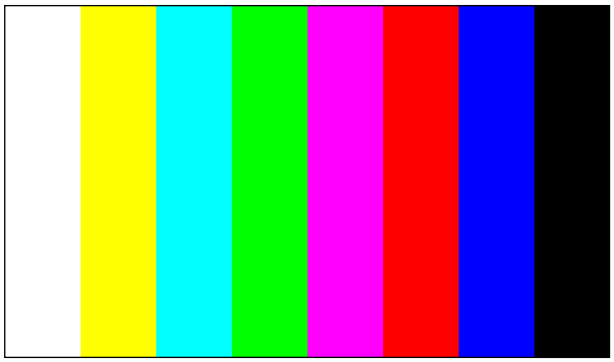

Operational description	Remote controller key
Return to test mode menu	RETURN
Pattern change	Band

4. RGB

RGB is plotted in the following pattern:
R:100% -> R:50% -> G:100% -> G:50% -> B:100% -> B:50% -> Magenta:100% -> Magenta:50% -> Cyan:100% -> Cyan:50% -> Yellow:100% -> Yellow:50% -> Black -> Gray -> White -> Green & Magenta dot signal
(The display of the screen will be changed in 1 second.)

R: 100%

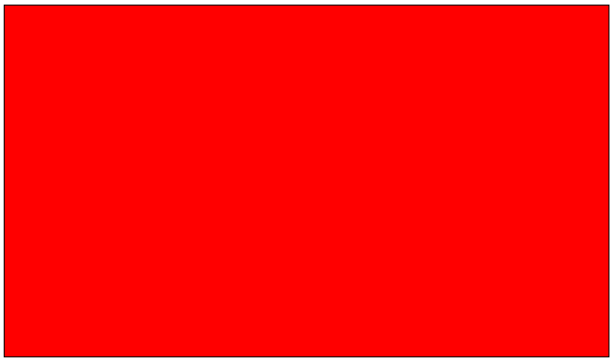

Operational description	Remote controller key
Return to test mode menu	RETURN
Stop / restart of auto display	Band

5. Raster Signal

Display of signals for step confirmation.

White 0%

Operational description	Remote controller key
Return to test mode menu	RETURN
Pattern change	Band

6. Contrast

Display of Black / White signals.

Black

Operational description	Remote controller key
Return to test mode menu	RETURN
Pattern change	Band

7. Center Marker

Display of signal for screen central location setting.

Center marker

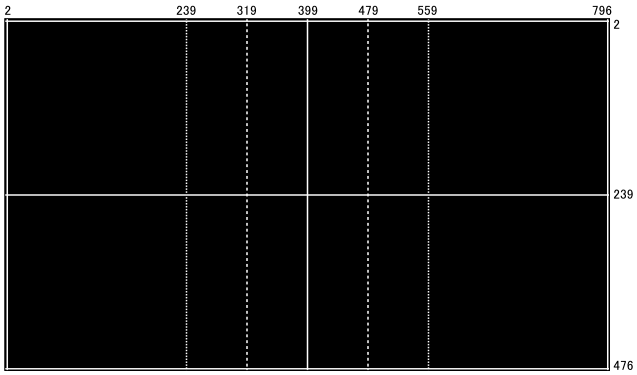

Operational description	Remote controller key
Return to test mode menu	RETURN

6. Rear Video Output Test

Method for Mode IN

Choose “6. Rear Video Output Test” among the Monitor Test Menu screen.

Display specification

On this Rear Video Output Test mode, test signals appear only on the rear video output terminal.

Top menu

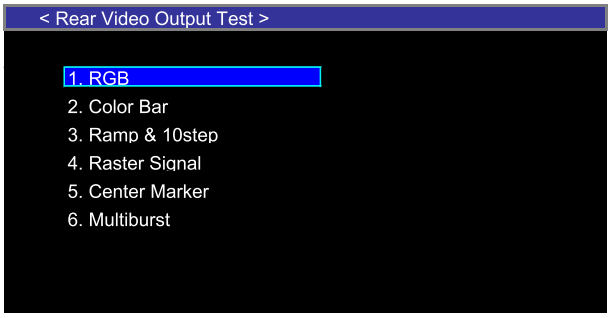

Operational description	Remote controller key
Return to test mode menu	RETURN
Selection cursor up movement	Up ▲
Selection cursor down movement	Down ▼
Menu enter	Band

1. RGB

RGB is plotted in the following pattern:
R:100% -> R:50% -> G:100% -> G:50% -> B:100% -> B:50% -> Black -> Gray -> White signal
(The display of the screen will be changed in 1 second.)

R: 100%

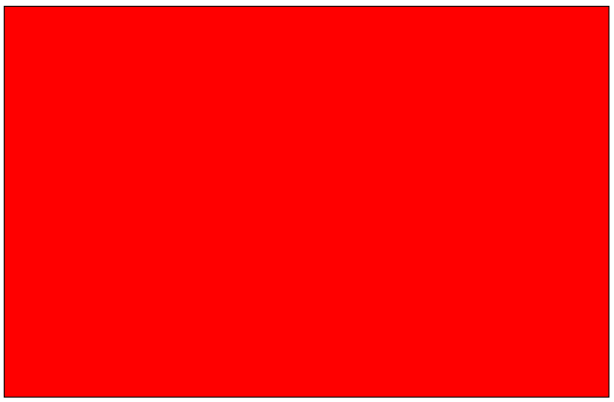

Operational description	Remote controller key
Return to test mode menu	RETURN
Stop / restart of auto display	Band

2. Color bar

Display of color bar signals.

Color bar (Vertical)

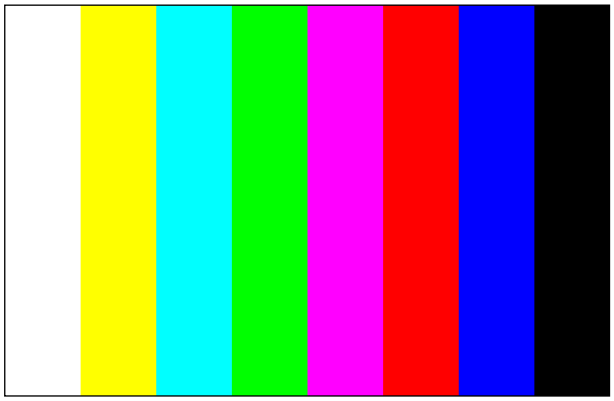

Operational description	Remote controller key
Return to test mode menu	RETURN

3. Ramp & 10step

Display of step signals and signals for alpha blend check.

Right-white 64step

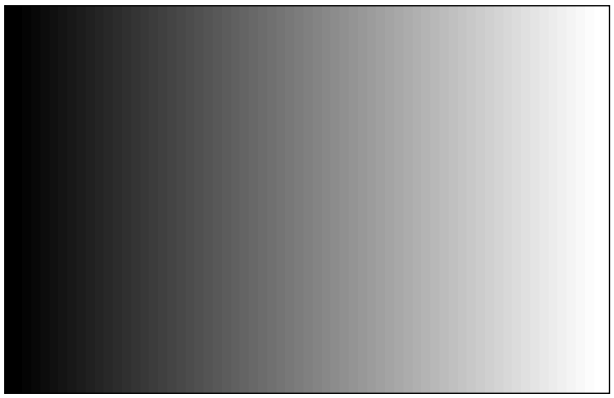

Operational description		Remote controller key
Return to test mode menu		RETURN
Alpha blend Up	(+0x10)	Up
Alpha blend Down	(-0x10)	Down
Alpha blend Up	(+0x01)	FF
Alpha blend Down	(-0x01)	REV
Pattern change		Band

4. Raster Signal

Display of signals for step confirmation.

White 0%

Operational description	Remote controller key
Return to test mode menu	RETURN
Pattern change	Band

5. Center Marker

Display of signal for screen central location setting.

Center marker

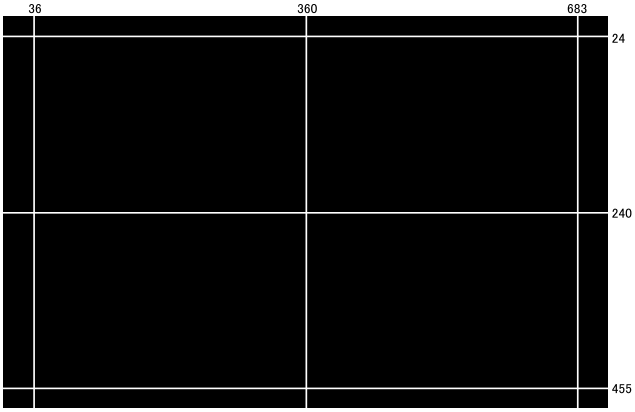

Operational description	Remote controller key
Return to test mode menu	RETURN

6. Multiburst

Display of multiburst signal.

Multiburst

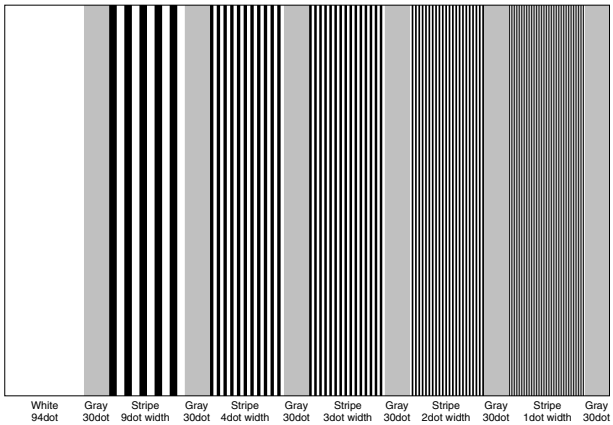

Operational description	Remote controller key
Return to test mode menu	RETURN

6.2 DVD TEST MODE

Test mode image

[EJECT] + [DISP] + Reset start
Switch position of the remote control unit.
[AVH mode]
(1)-(8) and EJECT is the key of remote control unit.

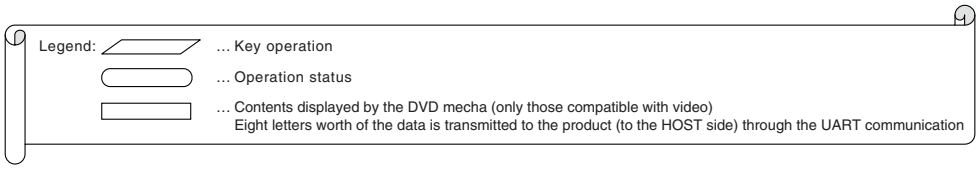

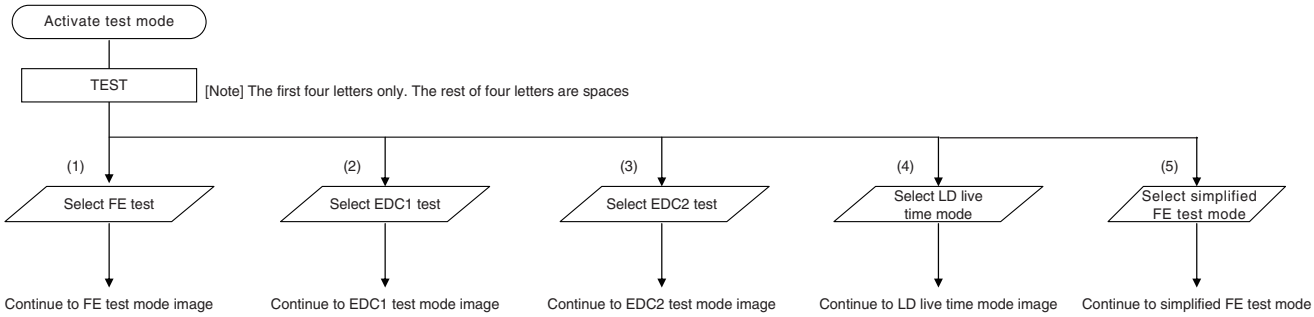

[Note] The DVD mecha needs to be activated in the test mode again to move to another test after selecting each test (FE/EDC1/EDC2).

Front-End test mode image

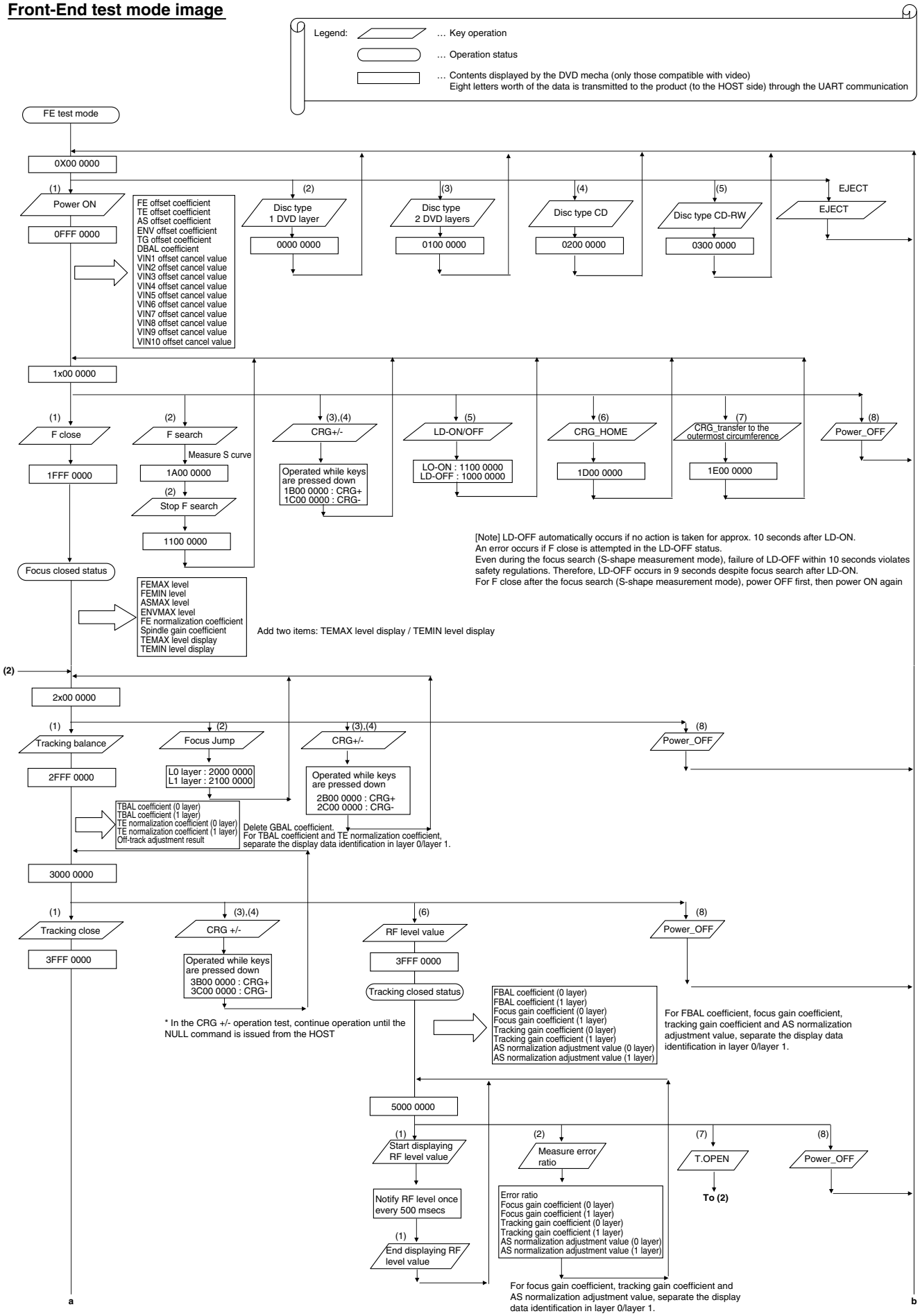

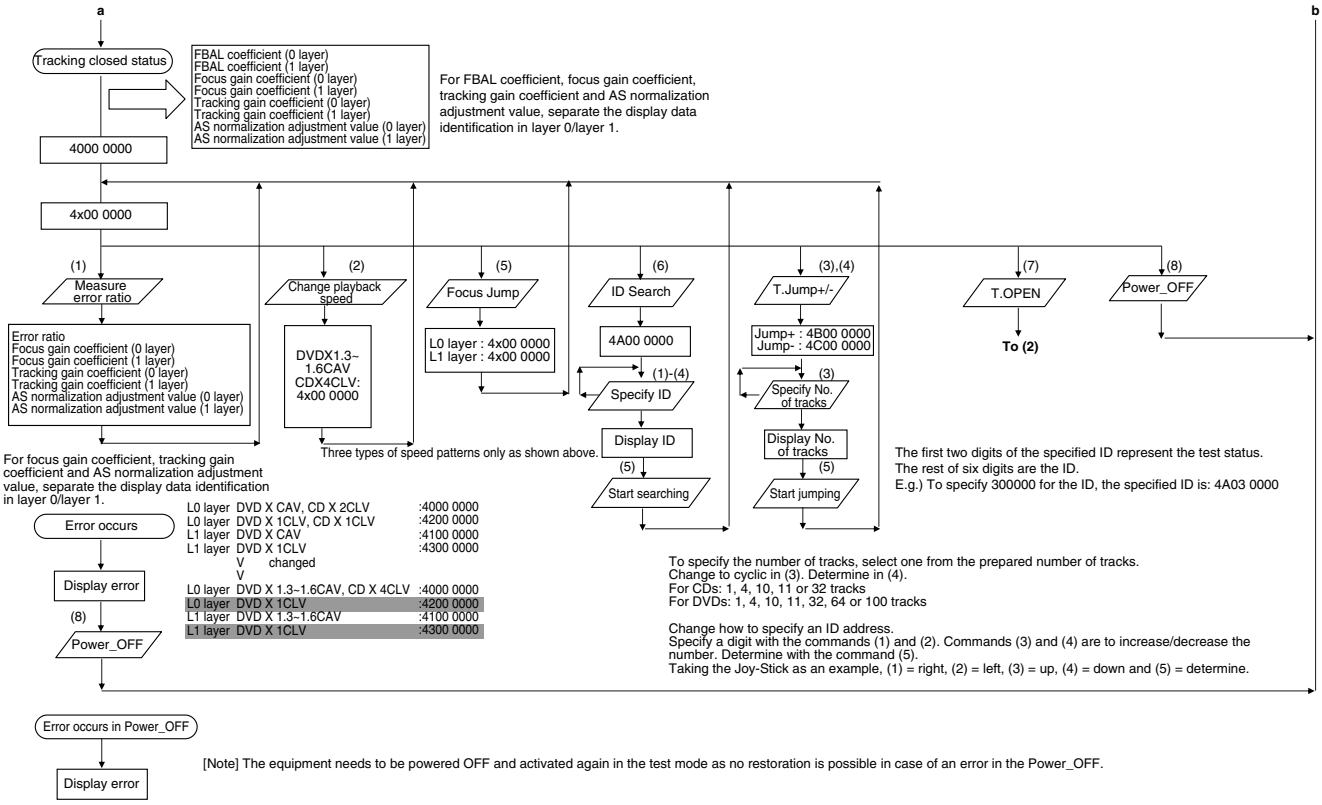
a
b
Tracking closed status
FBAL coefficient (0 layer)
FBAL coefficient (1 layer)
Focus gain coefficient (0 layer)
Focus gain coefficient (1 layer)
Tracking gain coefficient (0 layer)
Tracking gain coefficient (1 layer)
AS normalization adjustment value (0 layer)
AS normalization adjustment value (1 layer)
For FBAL coefficient, focus gain coefficient, tracking gain coefficient and AS normalization adjustment value, separate the display data identification in layer 0/layer 1.
4000 0000
4x00 0000
(1)
Measure error ratio
Error ratio
Focus gain coefficient (0 layer)
Focus gain coefficient (1 layer)
Tracking gain coefficient (0 layer)
Tracking gain coefficient (1 layer)
AS normalization adjustment value (0 layer)
AS normalization adjustment value (1 layer)
For focus gain coefficient, tracking gain coefficient and AS normalization adjustment value, separate the display data identification in layer 0/layer 1.
(2)
Change playback speed
DVDX1.3~1.6CAV
CDX4CLV:
4x00 0000
Three types of speed patterns only as shown above.
(5)
Focus Jump
L0 layer : 4x00 0000
L1 layer : 4x00 0000
(6)
ID Search
4A00 0000
(1)-(4)
Specify ID
Display ID
(5)
Start searching
The first two digits of the specified ID represent the test status.
The rest of six digits are the ID.
E.g.) To specify 300000 for the ID, the specified ID is: 4A03 0000
(3),(4)
T.Jump+/-
Jump+ : 4B00 0000
Jump- : 4C00 0000
(3)
Specify No. of tracks
Display No. of tracks
(5)
Start jumping
To specify the number of tracks, select one from the prepared number of tracks.
Change to cyclic in (3). Determine in (4).
For CDs: 1, 4, 10, 11 or 32 tracks
For DVDs: 1, 4, 10, 11, 32, 64 or 100 tracks
Change how to specify an ID address.
Specify a digit with the commands (1) and (2). Commands (3) and (4) are to increase/decrease the number. Determine with the command (5).
Taking the Joy-Stick as an example, (1) = right, (2) = left, (3) = up, (4) = down and (5) = determine.
(7)
T.OPEN
To (2)
(8)
Power_OFF
Error occurs
Display error
(8)
Power_OFF
L0 layer DVD X CAV, CD X 2CLV :4000 0000
L0 layer DVD X 1CLV, CD X 1CLV :4200 0000
L1 layer DVD X CAV :4100 0000
L1 layer DVD X 1CLV :4300 0000
V changed
V
L0 layer DVD X 1.3~1.6CAV, CD X 4CLV :4000 0000
L0 layer DVD X 1CLV :4200 0000
L1 layer DVD X 1.3~1.6CAV :4100 0000
L1 layer DVD X 1CLV :4300 0000
Error occurs in Power_OFF
Display error
[Note] The equipment needs to be powered OFF and activated again in the test mode as no restoration is possible in case of an error in the Power_OFF.

EDC test mode image

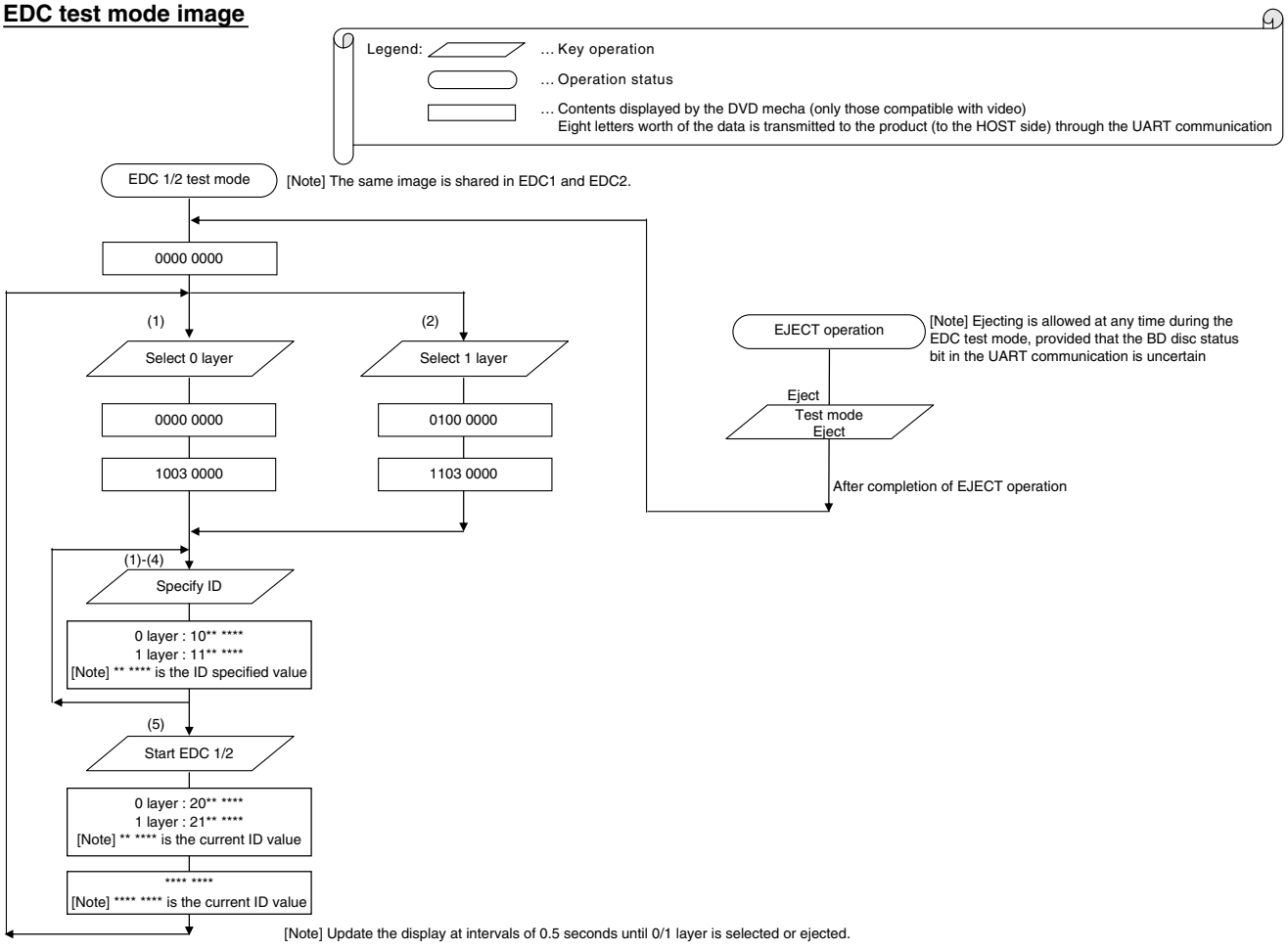

LD live time mode image

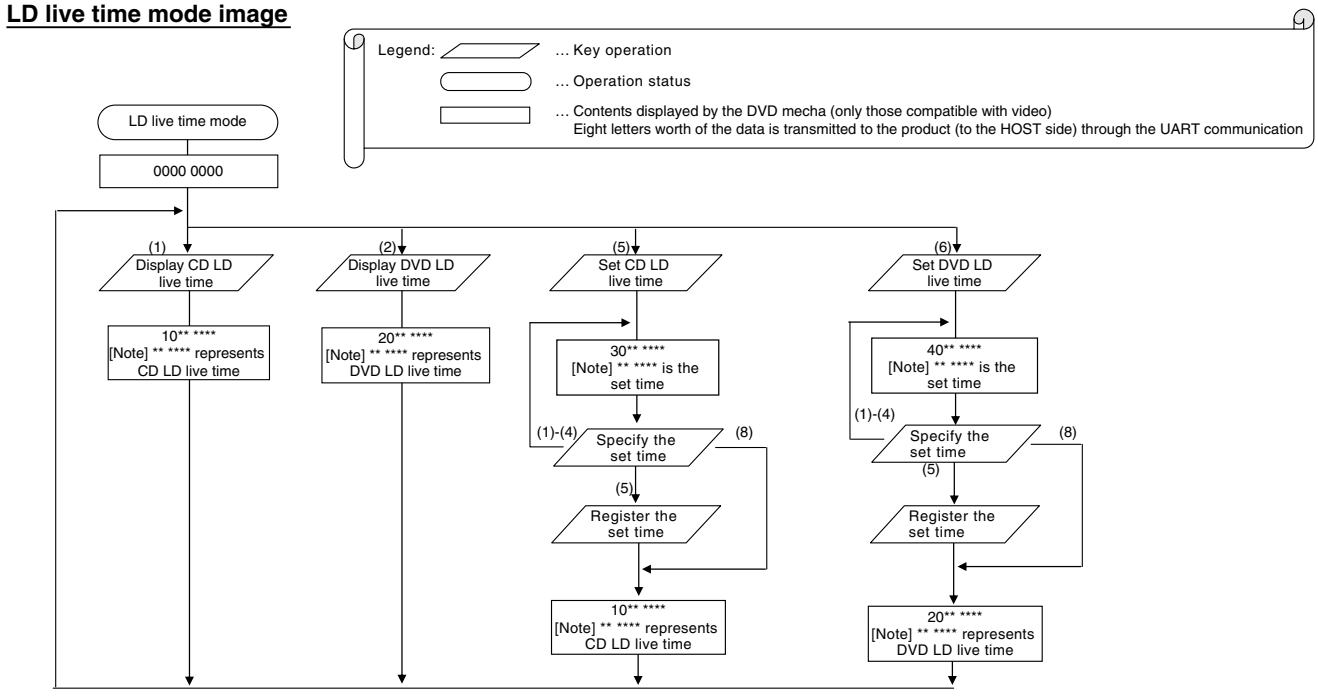

[How to specify a set time]
Specify a digit with the commands (1) and (2). Commands (3) and (4) are to increase/decrease the number.
Determine with the command (5). Cancel with the command (8).

[Note] All live times exceeding 999999 hours are notified as 999999 hours.
[Note] The live time represented in "*E** ****" may not be an accurate value as it represents the end of the life of the FLASH memory.

Simplified FE test mode

Numbers on each screen can be selected with the “test key commands”.
No display data for the test mode is notified in the simplified FE test mode.

<Screen transition>

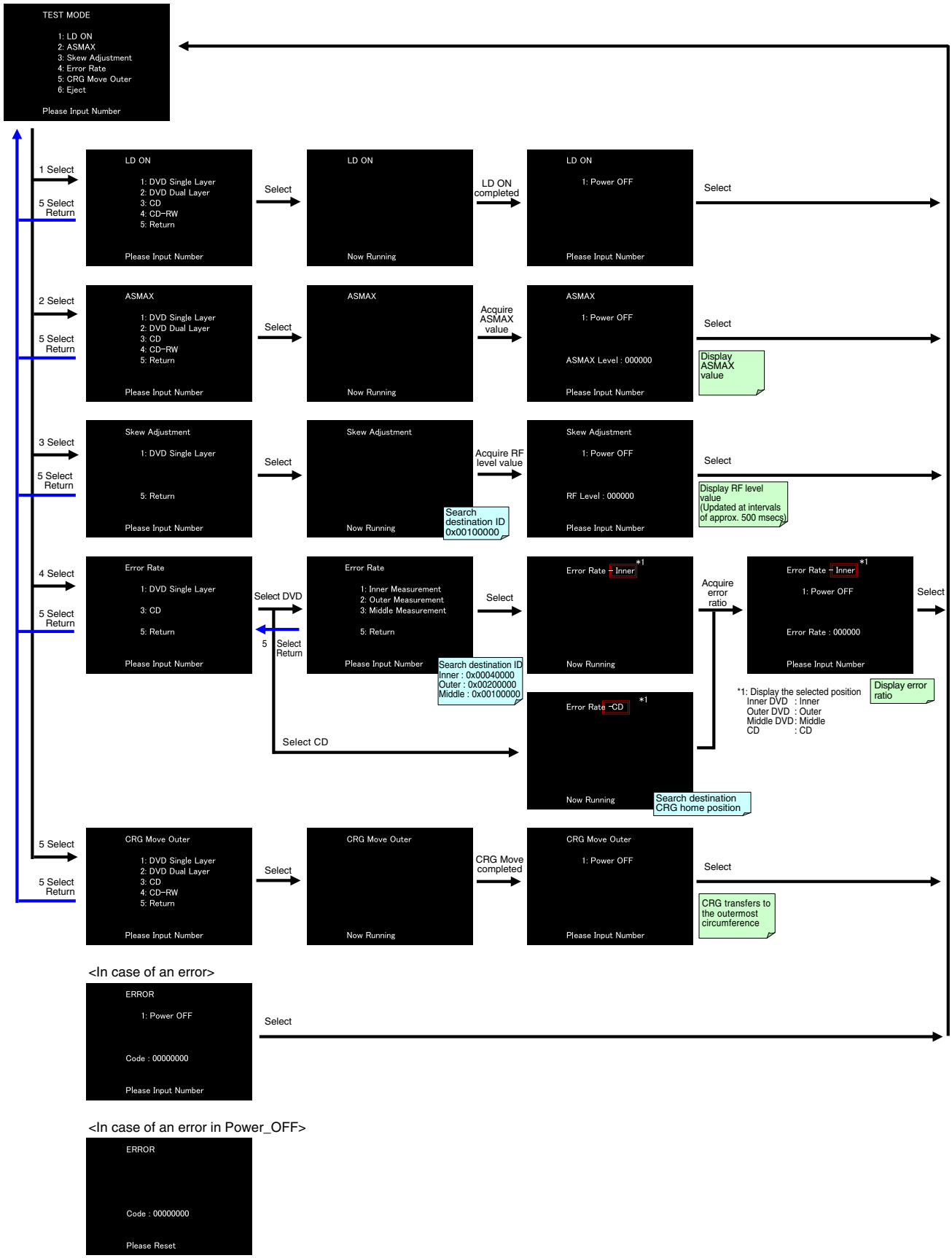

<In case of an error>

<In case of an error in Power_OFF>

Service Test Mode

The service test mode is used to check functions in fault diagnosis by a serviceman in case of any defect found in the DVD mecha.
This mode is enabled only when the test mode is activated. At this time, no normal operation is executed.

1. Outline

The service test mode is used to check functions in fault diagnosis by a serviceman in case of any defect found in the DVD mecha. No general user goes into this mode.
The mode is implemented mainly to check the FE part. It is originally the test mode at the FE part implemented in the PC communication, which is modified to allow implementation in the HOST communication.
The command for the test mode received in the HOST communication is interpreted by the application part, converted to the PC communication command and transferred to the OS.
The OS transfers this command to the PC task as if it received the command in the PC communication.
The execution result is noticed to the application part by an e-mail instead of the PC communication.
The application part then transmits the result in the HOST communication to display OSD.

2. Operation flow

Specification for the UART (HOST) communication

1) Key commands for the test mode

STATUS = 00h, TP = 11h, D0 = EEh, (Key commands for the test mode)
D1: Types of key commands exclusive for the test mode

Value of D1	Purpose
01h	Test mode command (1)
02h	Test mode command (2)
03h	Test mode command (3)
04h	Test mode command (4)
05h	Test mode command (5)
06h	Test mode command (6)
07h	Test mode command (7)
08h	Test mode command (8)
D0h	Test mode command EJECT
F0h	Test mode command NULL

* In CRG+/-, operation stops when the key is released. At that time, the DVD mecha should make the key command request (TP = B1h) on a regular basis to prevent any omission of key release.

2) Display data for the test mode

STATUS = 00h, TP = B5h, D0 = 02h, (Display data for the test mode)
D1: Display data identifier exclusive for the test mode
[The values of D1 are as shown in the table below]
D2 – 9: Eight letters worth of display data in ASCII. (Status or results are displayed)

Value of D1	Purpose	Continuous display specification				
01h	Status display					
02h	FE offset coefficient	1-1				
03h	TE offset coefficient	1-2				
04h	AS offset coefficient	1-3				
05h	ENV offset coefficient	1-4				
06h	TG offset coefficient	1-5				
07h	DBAL coefficient	1-6				
30h	VIN1 offset cancel value	1-7				
31h	VIN2 offset cancel value	1-8				
32h	VIN3 offset cancel value	1-9				
33h	VIN4 offset cancel value	1-10				
34h	VIN5 offset cancel value	1-11				
35h	VIN6 offset cancel value	1-12				
36h	VIN7 offset cancel value	1-13				
37h	VIN8 offset cancel value	1-14				
38h	VIN9 offset cancel value	1-15				
39h	VIN10 offset cancel value	1-16				
08h	FEMAX level		2-1			
09h	FEMIN level		2-2			
0Ah	ASMAX level		2-3			
0Bh	ENVMAX level		2-4			
0Ch	FE normalization coefficient		2-5			
0Dh	Spindle gain coefficient		2-6			
0Eh	TBAL coefficient (0 layer)			3-1		
1Eh	TBAL coefficient (1 layer)			3-2		
10h	TE normalization coefficient (0 layer)			3-3		
20h	TE normalization coefficient (1 layer)			3-4		
40h	Off-track adjustment result			3-5		
11h	FBAL coefficient (0 layer)				4-1	
21h	FBAL coefficient (1 layer)				4-2	
12h	Focus gain coefficient (0 layer)				4-3	5-2
22h	Focus gain coefficient (1 layer)				4-4	5-3
13h	Tracking gain coefficient (0 layer)				4-5	5-4
23h	Tracking gain coefficient (1 layer)				4-6	5-5
14h	AS normalization adjustment value (0 layer)				4-7	5-6
24h	AS normalization adjustment value (1 layer)				4-8	5-7
15h	Error ratio					5-1
16h	TEMAX level		2-7			
17h	TEMIN level		2-8			
50h	RF level					

* Each coefficient (excluding the status display) outputs data at intervals of every second.
E.g.) Power-on (examples of “1-” in the continuous display specifications above)
D1 = 01h, set the status display data to D2 – D9 and transmit
[1 second later]
D1 = 02h, set the FE offset coefficient to D2 – D9 and transmit
[1 second later]
D1 = 03h, set the TE offset coefficient to D2 – D9 and transmit
:
:
[1 second later]
D1 = 07h, set the DBAL coefficient to D2 – D9 and transmit
[1 second later]
D1 = 01h, after setting the status display data to D2 – D9 and transmitting, wait for keys

Note 1 A media type is specified here. Settings should be implemented according to this specification.
Note 2 Switching gains should be: normal gain -> OEIC =H -> OEIC =H and FEPx4 amps ON
Note 3 Any other operation is prohibited during measurement
Note 4 Playback speed should be: 1.3 – 1.6CAV for DVDs and x4CLV fixed for CDs

Number of keys required for the product: nine ((1) – (8) plus EJECT)
The test mode commands 1 to 8 + EJECT as well as the NULL command should be used for the HOST communication.

To specify the number of tracks, select one from the prepared numbers of tracks.
Change to cyclic in (3). Determine in (4).
For CDs: 1, 4, 10, 11 or 32 tracks
For DVDs: 1, 4, 10, 11, 32, 64 or 100 tracks

Change how to specify an ID address
Specify a digit with the commands (1) and (2). Commands (3) and (4) are to increase/decrease the number. Determine with the command (5).
Taking the Joy-Stick as an example, (1) = right, (2) = left, (3) = up, (4) = down and (5) = determine.

*F close and F search will not be executed unless LD is ON.

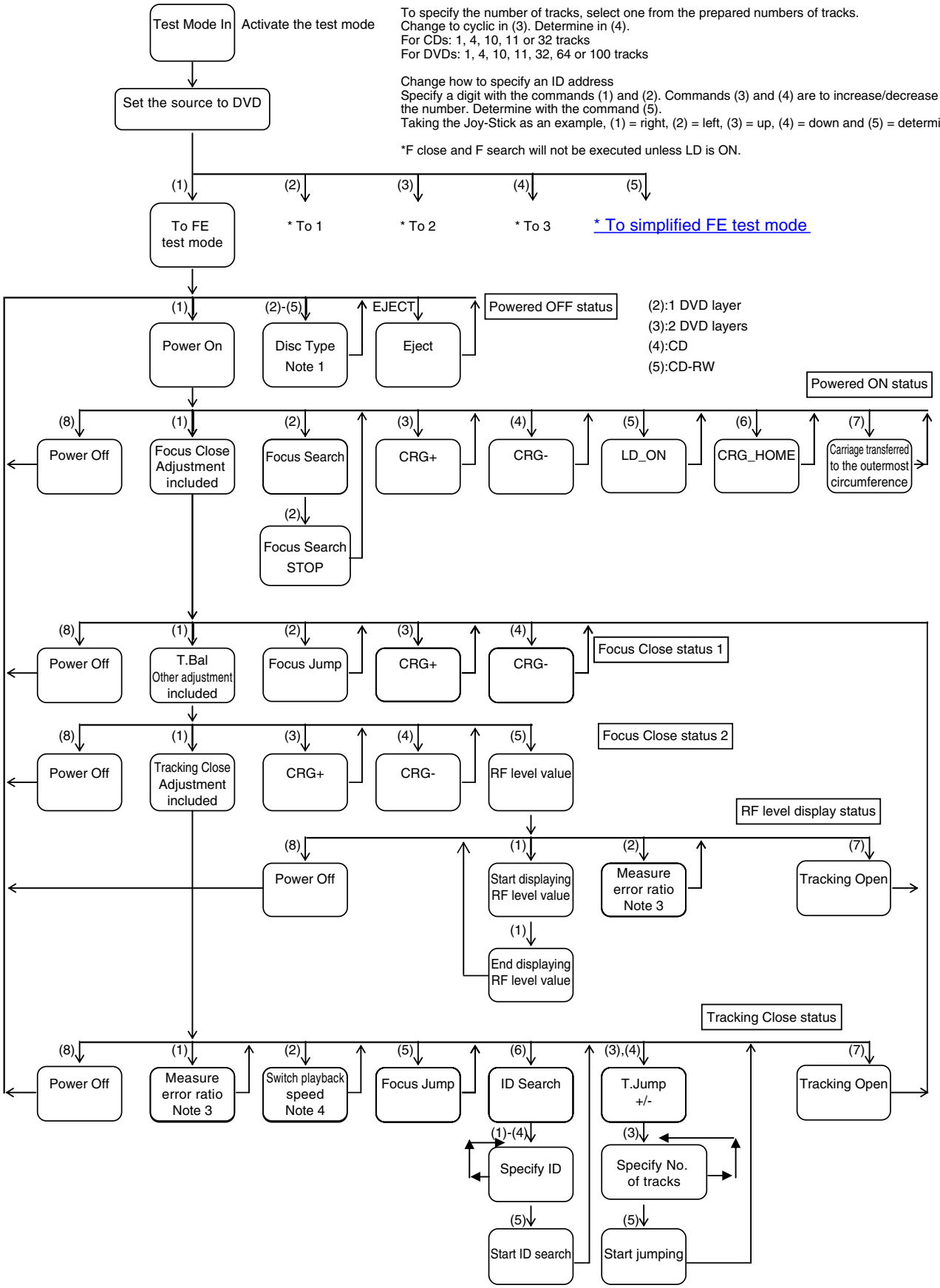

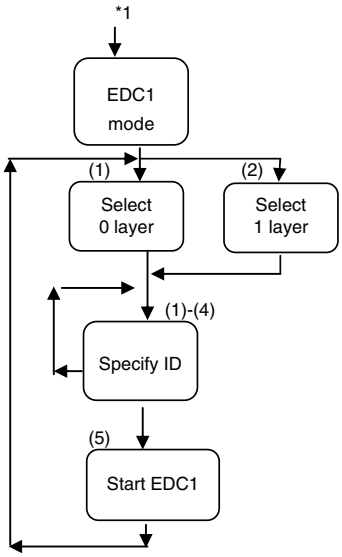

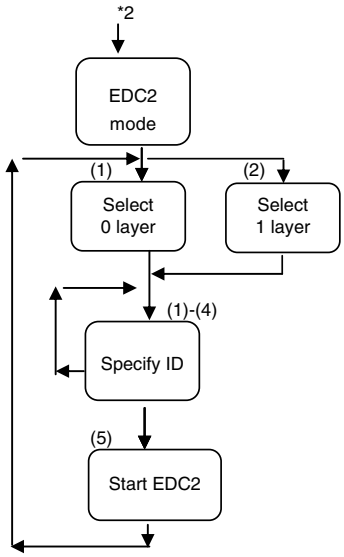

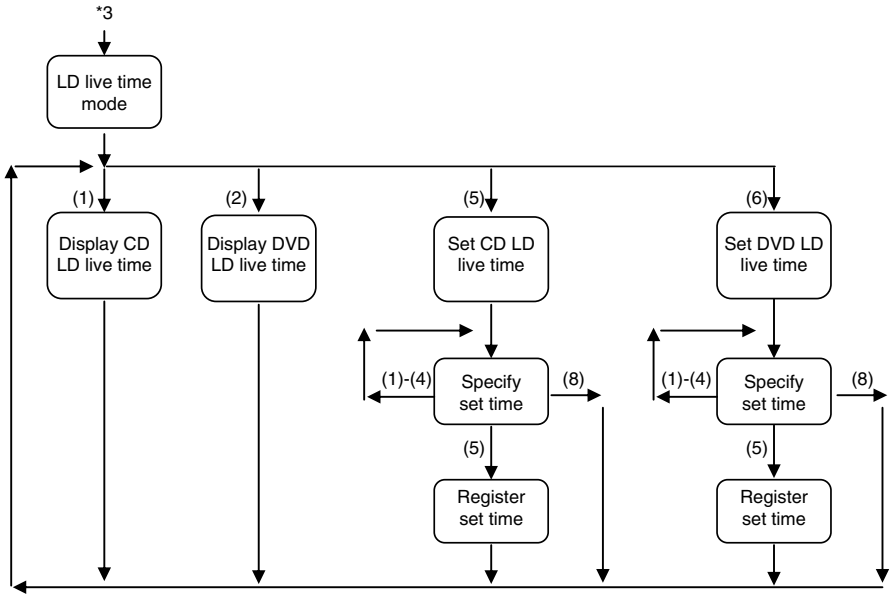

[How to specify a set time]
Specify a digit with the commands (1) and (2). Commands (3) and (4) are to increase/decrease the number. Determine with the command (5).
Cancel with the command (8).

6.3 DVD MECHANISM TOUCH PANEL TEST MODE

For temporary analysis for service
(for temporary analysis of user complaint for touch direct of DVD)

How to enter the system

Hold **FORWARD** key and **VOL+** key, press reset.

Select DVD TOUCH PANEL TESTMODE.

Specifications of display

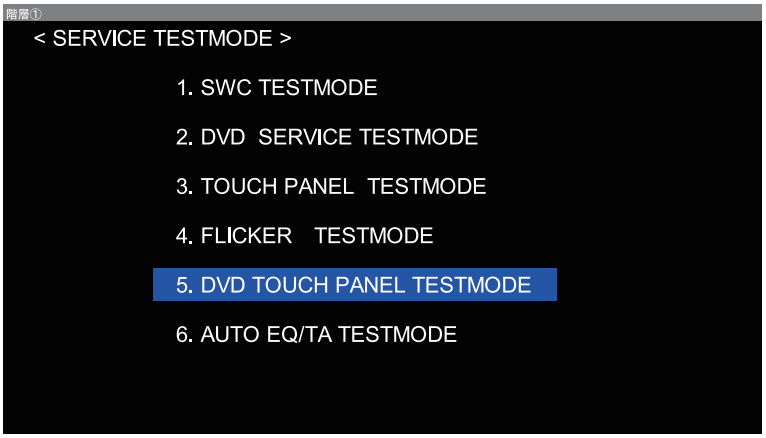

[Content]

1. A white rectangle frame is displayed in menu.

2. If you touch the screen, a white cross image [+] is displayed to indicate that it is a pressed coordinate.

7. DISASSEMBLY

While the photograph shown is slightly different from this model in shape, the disassembly procedure is the same.

●Removing the Grille Assy (Fig.1)

1 Disconnect the connector.

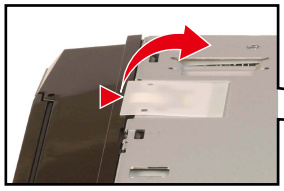

▶ Note:
Lift and remove the tip of sheet in the direction indicated by an arrow using the tweezer etc. and then disconnect the connector.

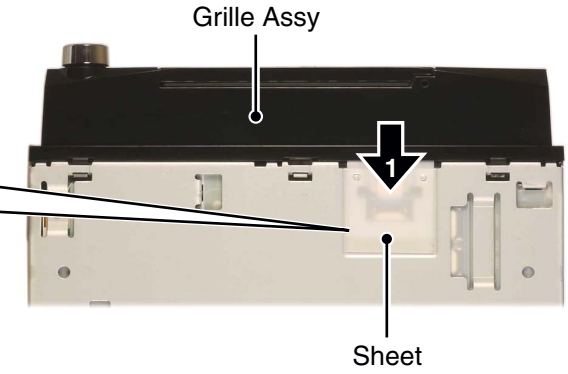

2 Remove the two screws.

3 Release the three latches and then remove the Grille Assy.

Fig.1

●Removing the Display Module Unit (1/2) (Fig.2)

1 Remove the five screws and then remove the Display Module Unit.

(Rear Side)

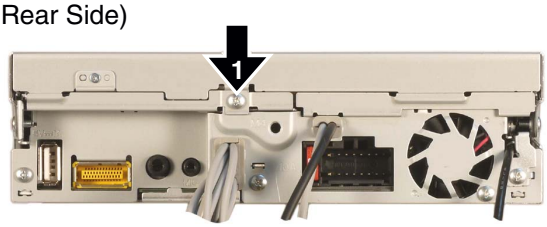

(Left Side)

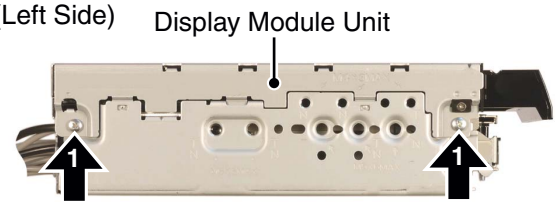

(Right Side)

Fig.2

●Removing the DVD Mechanism Module and the Display Module Unit (2/2) (Fig.3)

1 Remove the four screws and then lift the Bracket toward the Display Module Unit.

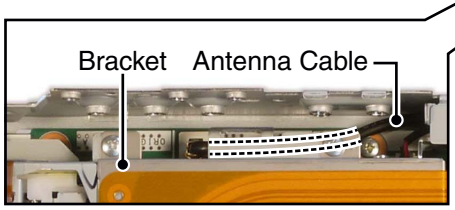

Attention at assembly:
Though the Antenna Cable under the Bracket of DVD Mechanism Module as shown in the photo.

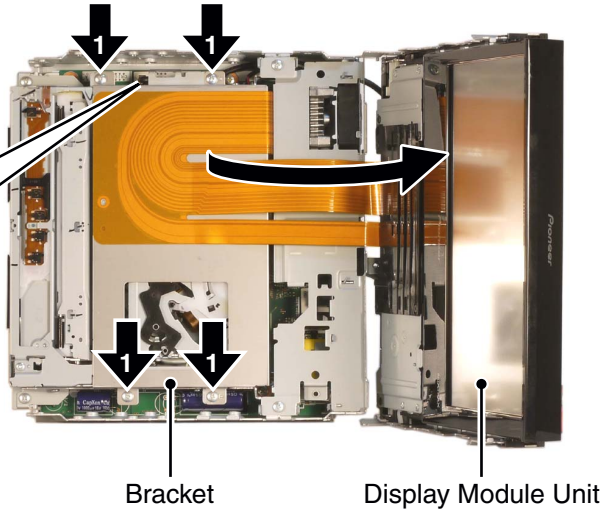

2 Remove the four screws.

3 Disconnect the connector and then remove the DVD Mechanism Module.

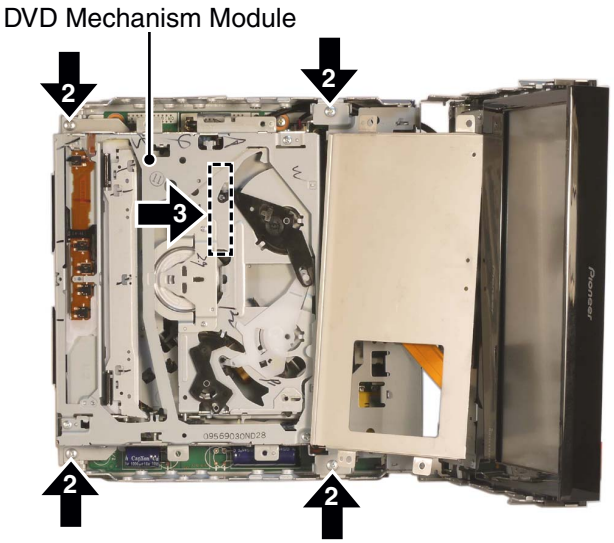

4 Disconnect the connector and then remove the Display Module Unit.

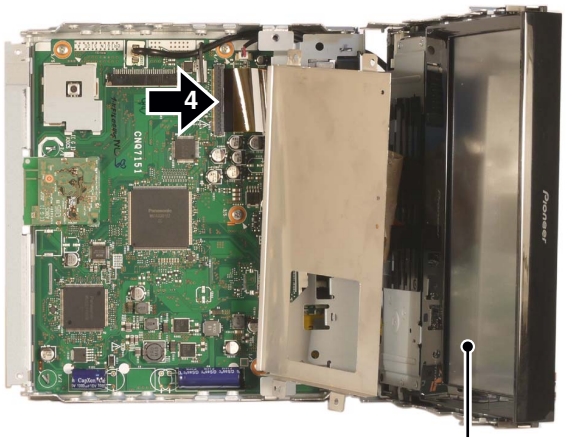

Fig.3

●Removing the Holder (Fig.4)

1. Straighten the tab at two locations indicated and then remove the Holder (1).
2. Remove the screw.
3. Remove the three screws and then remove the Holder (2).

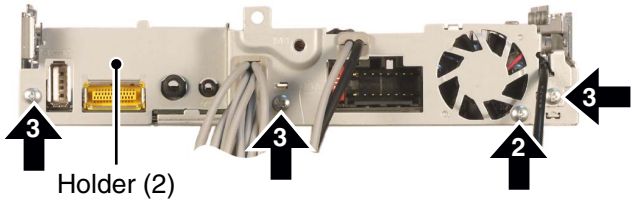

Attention at assembly:
Lay the Antenna Cable and Fan Cable by pushing the root of Cable as shown in the photo.

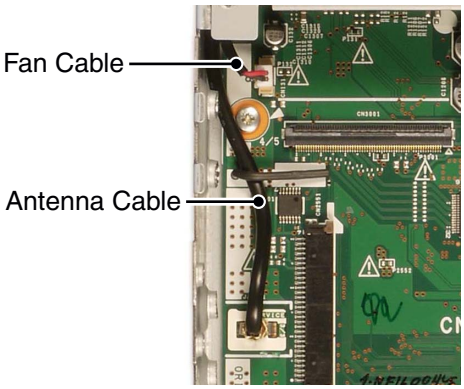

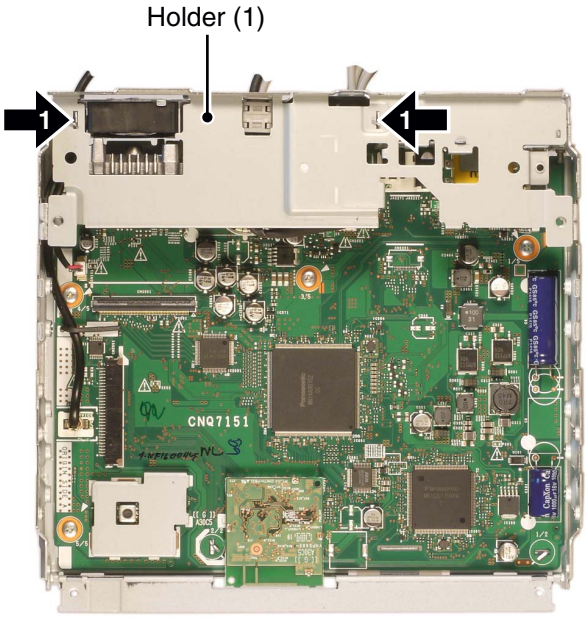

Fig.4

●Removing the Mother Unit (Fig.5)

1. Remove the five screws.
2. Straighten the tabs at two locations indicated and then remove the Mother Unit.

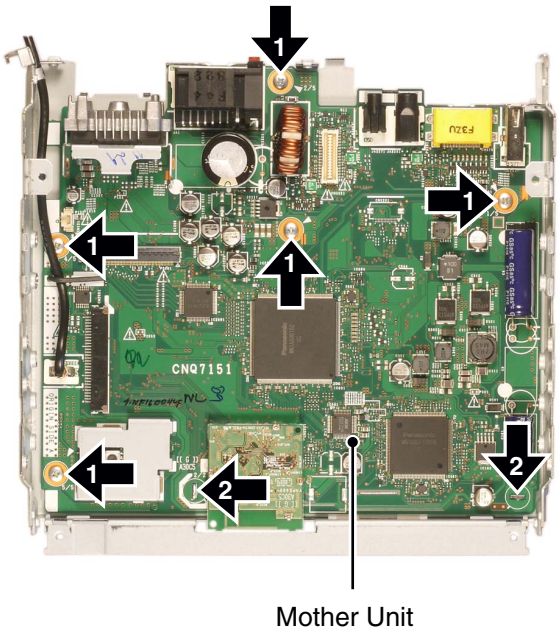

Fig.5

●Removing the Monitor Assy (Fig.6)

1. Remove the four screws and then remove the Cover (1).
2. Disconnect the connector.
3. Remove the two screws and then remove the two Guides(Right side, Left side).
4. Pull out the Monitor Assy in the direction indicated by an arrow.

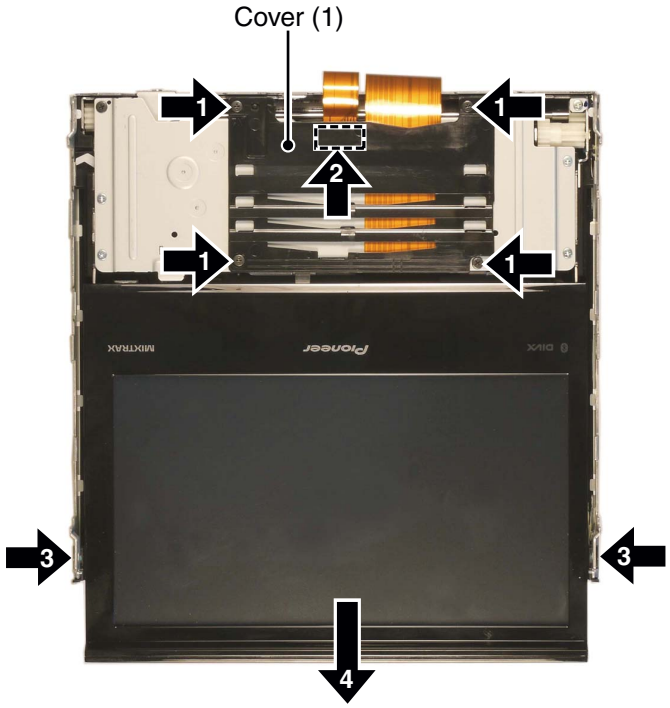

5. Release the two latches and then remove the Sheet.
6. Remove the two screws and then remove the Cover (2).
7. Remove the four screws.
8. Disconnect the connector and then remove the Monitor Assy.

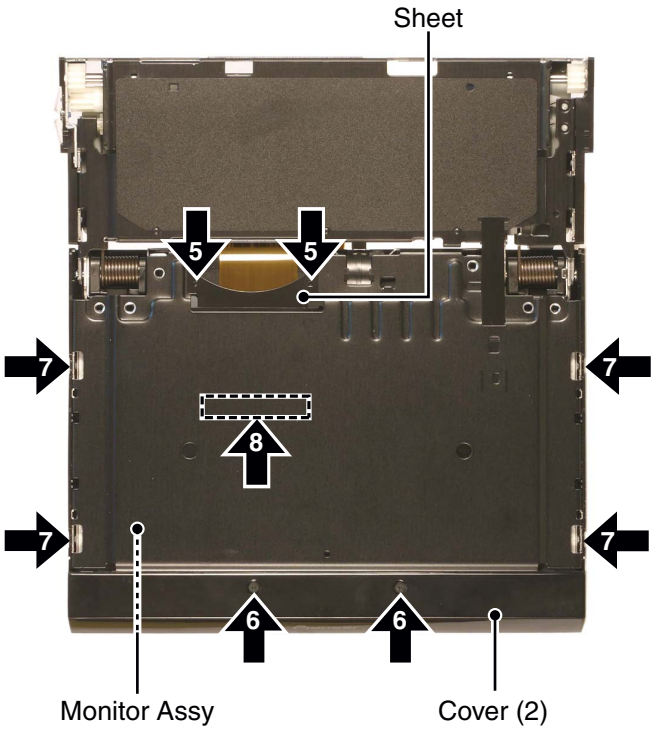

Fig.6

● Removing the Monitor Unit (Fig.7)

1. Disconnect the three connectors.
2. Remove the two Gaskets.

   Attention at assembly:
   Attach the Gaskets as shown in the photo when mounting the Monitor Unit.
3. Release the two latches and then remove the Monitor Unit.

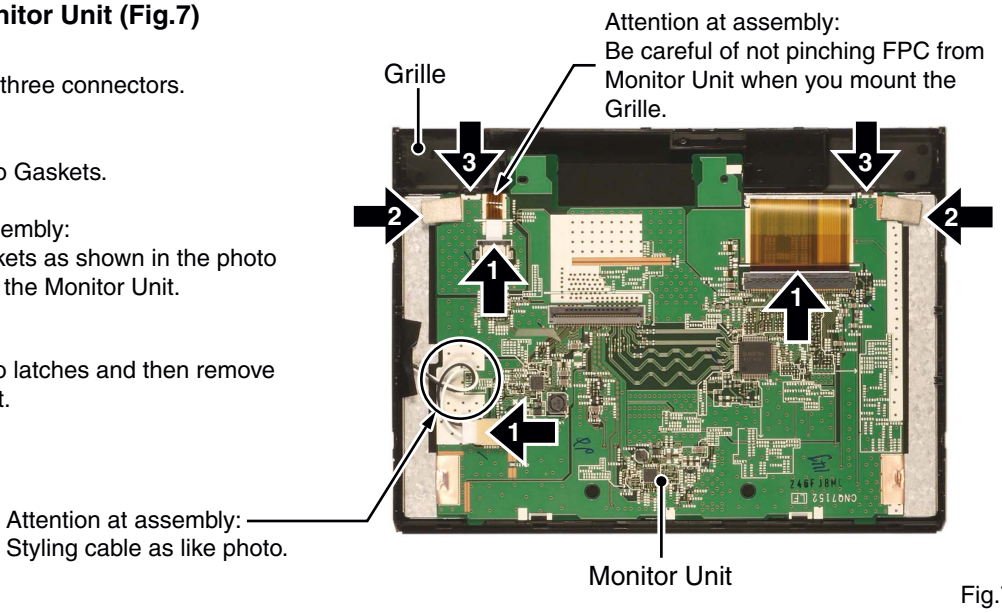

Fig.7

● Removing the Main PCB Unit and the SW PCB Unit (Fig.8)

1. Remove the two screws.
2. Remove the six screws and then remove the Cover.
3. Remove the five Gears.
   (When installing the Gears, please use caution not to mistake the installation position)
4. Remove the five solders.
5. Remove the screw and then remove the Main PCB Unit.
6. Remove the Washer, Arm(1) and the Torsion Spring.
7. Remove the Washer, Arm(2) and the Torsion Spring.
8. Remove the screw and then remove the SW PCB Unit.

Note:
As Main PCB Unit and SW PCB Unit are connected with FFC, Main PCB Unit and SW PCB Unit are removed at the same time.

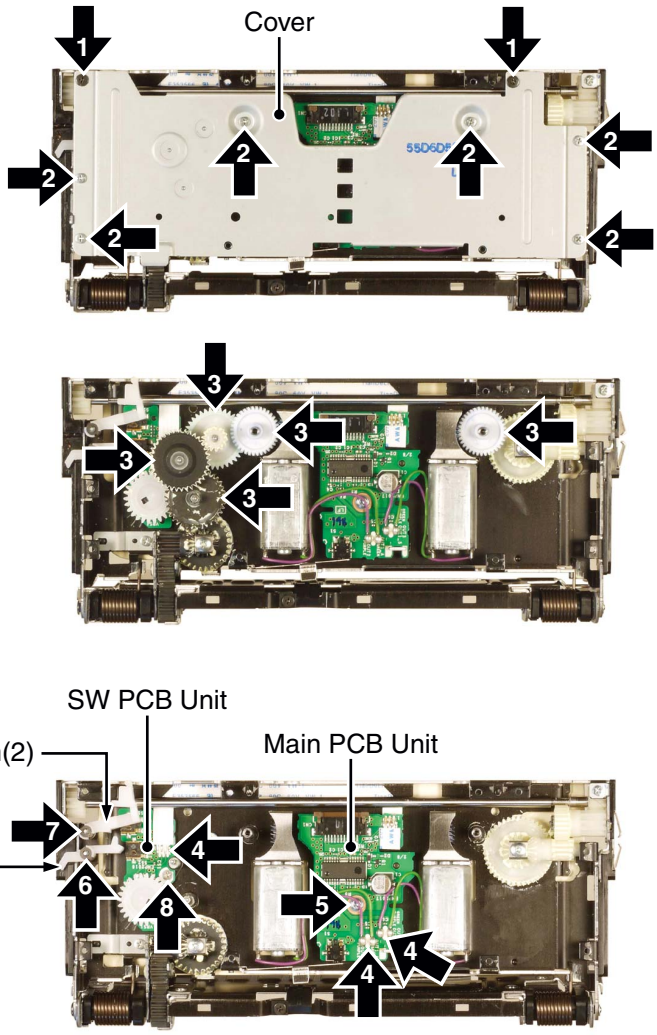

Fig.8

●How to Hold the Mechanism

1. Hold the specified parts (indicated by broken lines) of upper and lower frames.
2. Hold the main frame and the upper frame.
3. Do not hold the front part of the upper frame because the intensity is low.
4. Do not touch the switch on the ceiling surface of the mechanism. (Fig. 1)
5. Take care not to catch the flexible part on the side face.
6. Take note that a deformation may be generated if you hold the front part of the upper frame or CRG mechanism part or a foreign object is inserted.

Handling OK

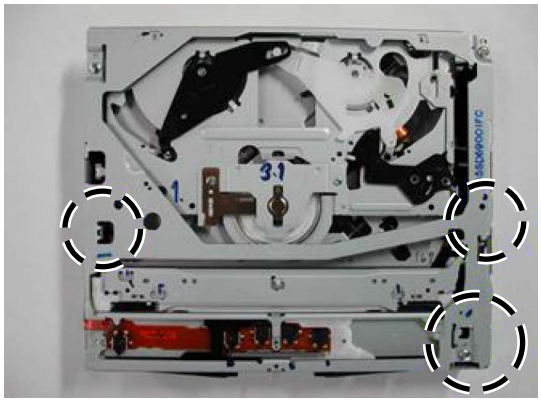

Handling NG

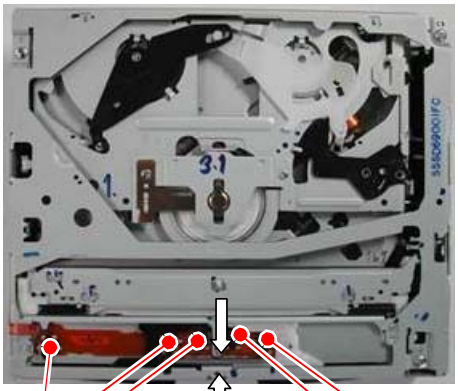

Fig. 1

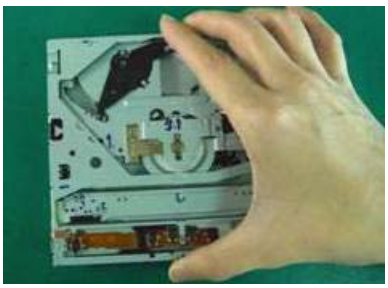

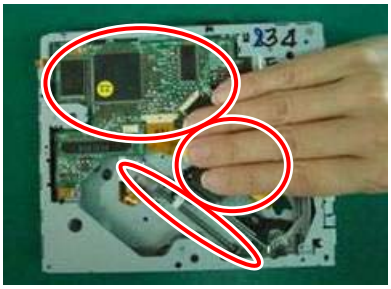

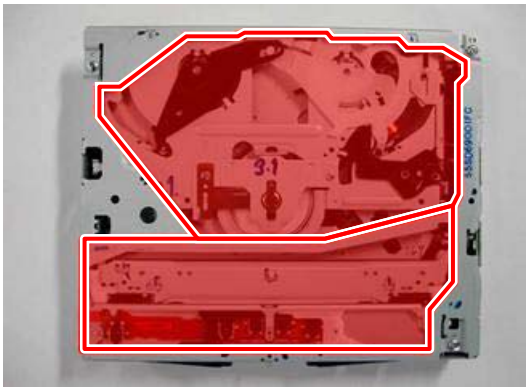

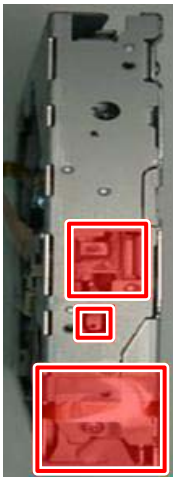

: Do not touch here

● Removing the PU unit

1. Set the mechanism to the locking position (disc load standby position).
2. Set the ceiling surface of the mechanism module downward.
3. Short-circuit two parts of lands of the pickup flexible part. (Fig. 1)
4. Remove the connector of the pickup flexible part. (Fig. 2)
   (The flexible part is damaged if the board is removed without removing the flexible part, so be sure to remove it.)

Fig. 1

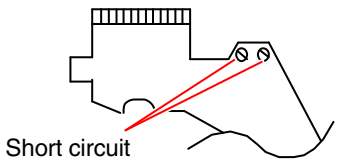

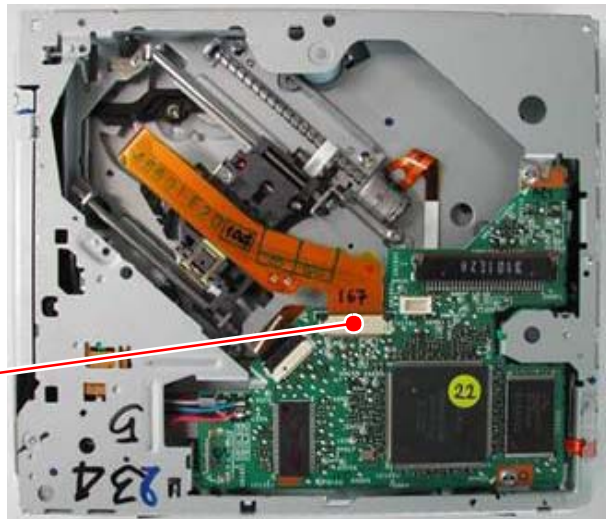

Fig. 2

1. Unscrew two screws and remove the CRG motor ASS'Y.

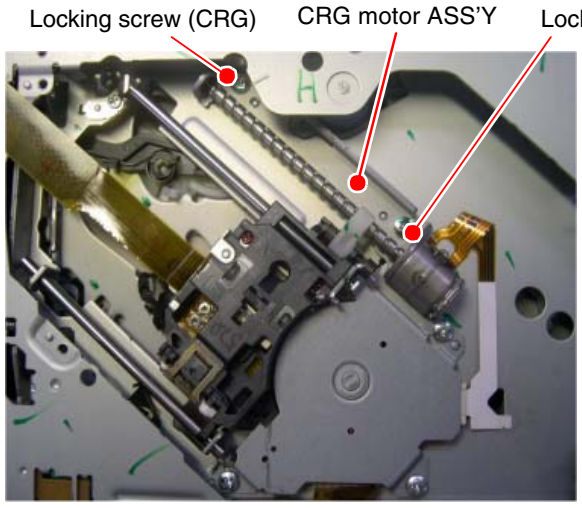

Fig. 3

1. Apply the main shaft holddown spring to the temporary applying part of CRG chassis.
2. Remove the CRG motor ASS'Y following “How to remove the CRG motor ASS'Y”.
3. Remove the retainer plate spring of the main shaft.
4. While holding up the tip of the pickup rack, slide the main shaft and remove the PU unit.

(Caution) When you attach the PU again, carry out the adjustment surely following the description in the service manual of the mounted product.
Be sure to carry out the actual applying of main shaft holddown spring.

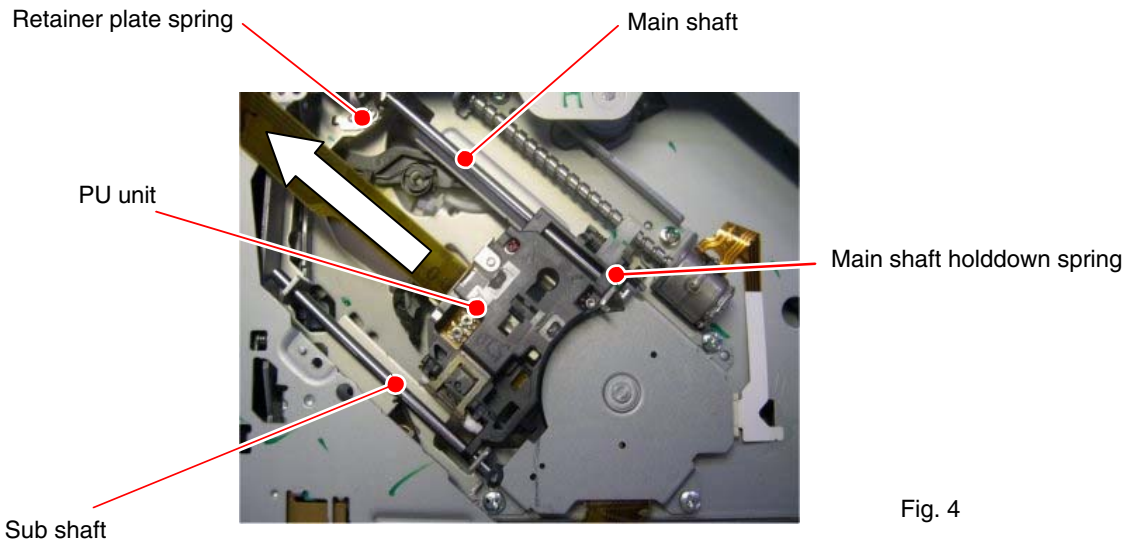

Fig. 4

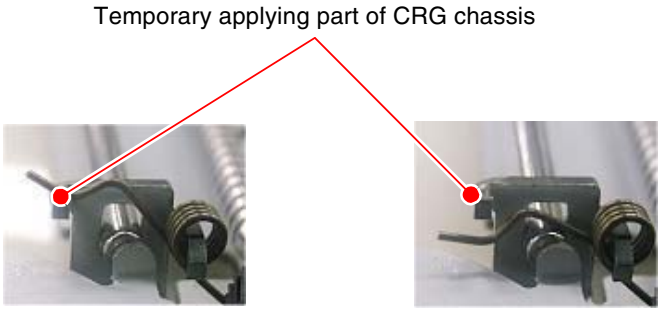

●How to Hold PU (Fig. 5)

1. When you hold PU, hold “Handling OK” part shown in the figure and do not hold “Handling NG” part.

Handling OK

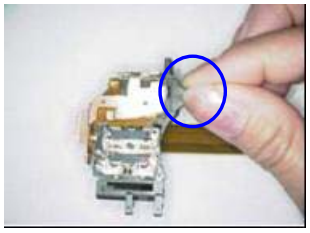

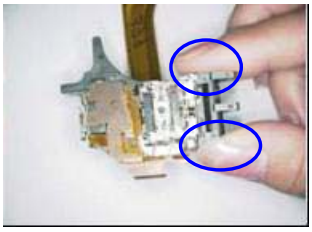

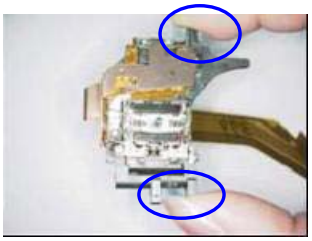

Handling NG

Do not touch the radiator.

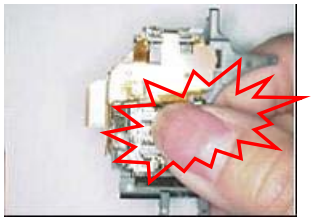

Do not touch the ACT(object lens).

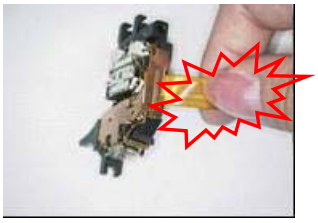

Do not pull the FPC.

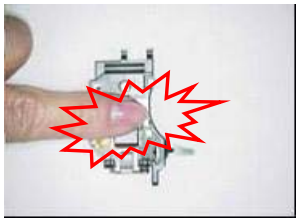

Do not touch the Miller or Collimator lens.

Fig. 5

8. EACH SETTING AND ADJUSTMENT
8.1 DVD ADJUSTMENT

1) Precautions in adjustment

Employing the single voltages including 5 V and 3.3 V as the power supply, the machine has the reference potential for signals being not the GND but VREF (approx. 2.2 V) and VHALF (approx. 1.65 V).
Confusion between the reference voltage and the GND for connection at the time of adjusting the product not only prevents the proper measurement of potentials but results in the erroneous operation of the servo, giving a high impact on the pickup. Therefore, be careful of the following:
Do not confuse the reference voltage and the GND at the negative side of the instrument probe. Particularly, do not connect the negative side of ch1 of the oscilloscope to the reference voltage, or the negative side of the probe of ch2 to the GND. Also, set the instrument to the floating status as the instrument often has the same potential as the negative side of the probe.
If the reference voltage is connected to the GND by mistake, turn OFF the regulator or the power immediately.

- Make sure to remove various filters and wire rods necessary for measurement while the regulator is OFF.
- Before adjustment and measurement after turning ON the regulator, run the instrument for around a minute until the circuit is stabilized.
- In the test mode, do not apply any mechanical or electric shock during adjustment as protections through software do not operate in this mode.
- Once the EJECT key is pressed, do not press any other key until the disc is completely ejected.
- Power OFF immediately in case of run a way.
- Turning the volume for adjusting the laser power of the pickup unit may result in the breakage of the laser diode.

●SKEW adjustment

The skew adjustment for the pickup is required when the following replacement is performed:
(1) Replacement of the pickup unit
(2) Replacement of the spindle motor
(3) Replacement of the carriage chassis
(4) Replacement of the main shaft of the pickup unit
(5) Replacement of the sub-shaft of the pickup unit

• Measuring instrument, jigs and tools: Oscilloscope
Driver for adjusting SKEW => torques (T2) driver
Bond for fixing SKEW (GEM1033)
Bond for screw lock (GEM1068)

• Disc used: GGV1025

• Measurement criterion: AGND2
• Measurement point: RF

• Connection diagram
DVD core unit

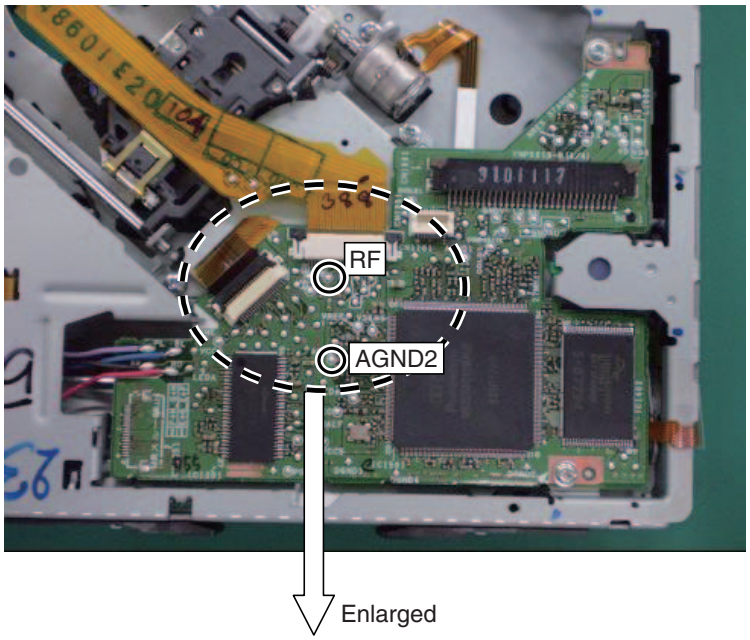

Enlarged

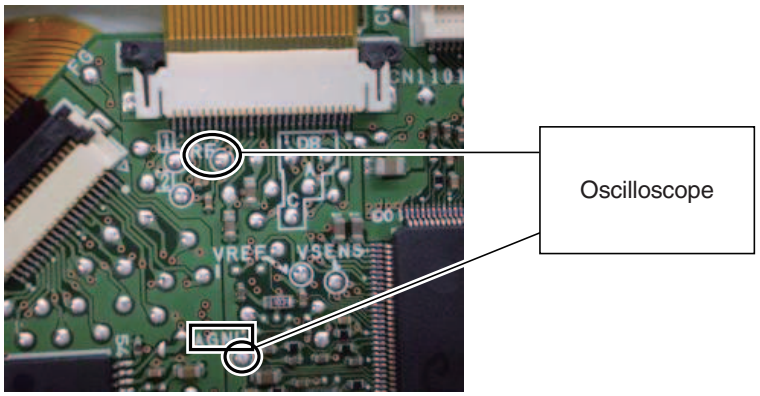

Symptoms seen in case of inadequate adjustment: Worsened error ratio 10-3 (normally 10-4 or less)
Large RF jitter
RF waveform is distorted
Tracking leading-in/servo is unstable

* Note: Do not directly look at laser beam in adjustment.

There are two types of adjustments available: adjustment while monitoring the RF waveform with the oscilloscope (method ①) and adjustment while checking the RF level values with the OSD (method ②).
The adjustment procedure is shown below. For how to enter the test mode and the operation procedure, see the sections in the Service Test Mode.

Adjustment procedure:

1. Turn back the DVD mechanism module to ensure pickup adjustment.
   As turning back the module may result in the scratched disc, place a coin around 1.5mm thick on the desk, and turn back and set the module so that the spot indicated in ① comes directly above the coin.

2. Attach the pickup.
   (See How to Remove the Pickup of the Mecha Unit.)
   For the precautions in handling the pickup, see the Precautions in PU Handling below:

3. For the method ①:
   Refer to the connection diagram and connect the oscilloscope based on AGND2 so the RF signal can be monitored.
   For the method ②:
   The device requires no setting. Skip to the fourth procedure.

4. Power ON the product and load the adjustment disc (GGV1025).

5. After setting the disc type to 1 DVD layer in the front-end test mode, power ON and move the pickup to the inner circumference (CRG-Home).

6. LD ON

7. Execute focus close, all automatic adjustment in the status and tracking close.
   Further, execute all automatic adjustment in that status as well.

8. Search the middle circumference (ID: 100000) and take the pickup to the middle circumference.

9. For the method ①:
   Skip to the tenth procedure.
   For the method ②:
   After Tracking Open first, execute all automatic adjustment and then tracking close with the command that can be displayed in RF.
   Further, execute all automatic adjustment in that status as well.

10. Using the torques (T2) driver,
    For the method ①:
    Slightly screw the skew adjustment screw A while viewing the RF waveform level of the oscilloscope to maximize the level.
    Slightly screw the skew adjustment screw B while the pickup stays in the middle circumference to maximize the level.
    Slightly screw the skew adjustment screw A again while the pickup stays in the middle circumference to maximize the level.
    (Perform adjustment in order of A => B => A, and finally rotate the screws clockwise to complete adjustment.)
    For the method ②:
    Slightly screw the skew adjustment screw A while viewing the RF level value in the OSD display to maximize the level.
    Slightly screw the skew adjustment screw B while the pickup stays in the middle circumference to maximize the level.
    Slightly screw the skew adjustment screw A again while the pickup stays in the middle circumference to maximize the level.
    (Perform adjustment in order of A => B => A, and finally rotate the screws clockwise to complete adjustment.)

11. Power OFF in the test mode, and check that the disc is stopped before ejecting.

12. Apply adhesive for fixing skew and screw lock.
    See the figure below for the spots to adhere.

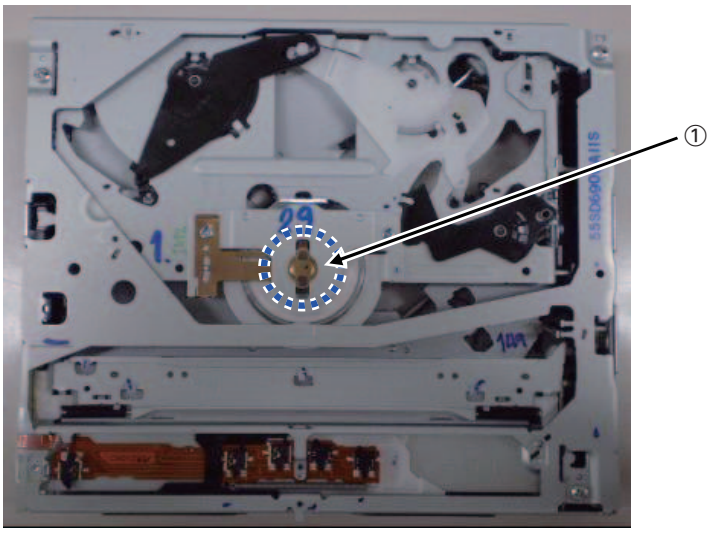

Spots for SKEW adjustment

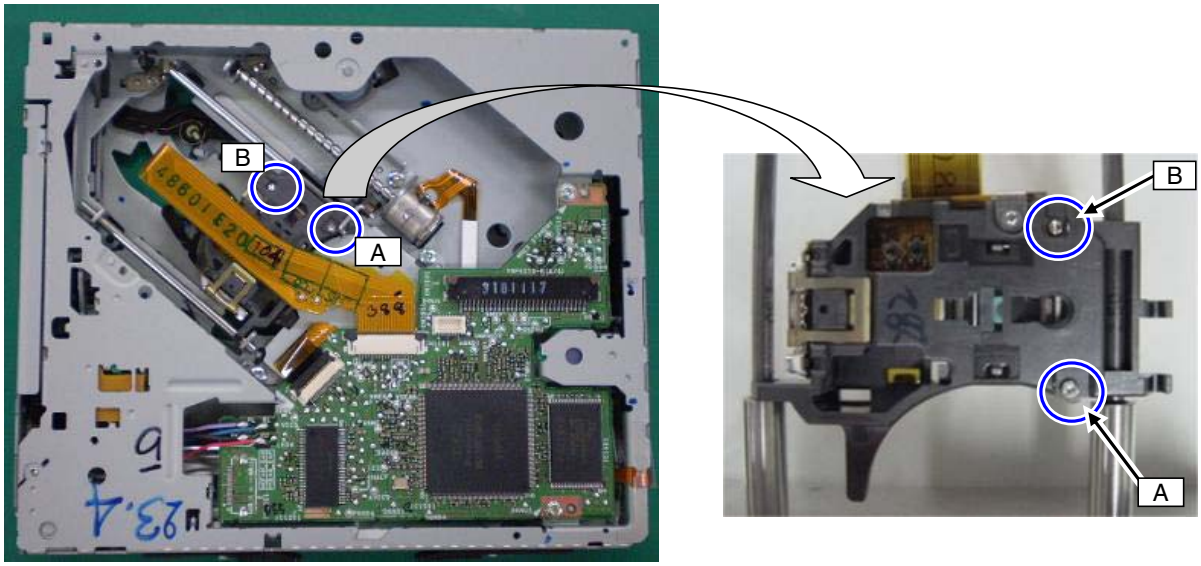

Spots to adhere in SKEW

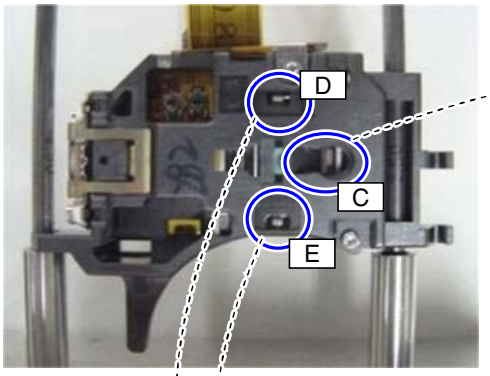

Spots to adhere in RAD-SKEW

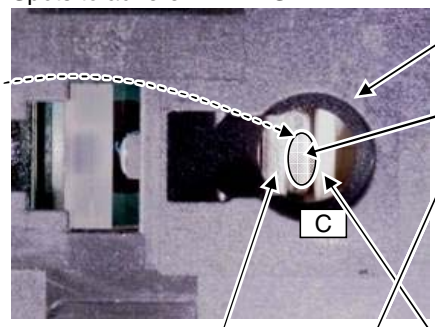

Spots to adhere in TAN-SKEW

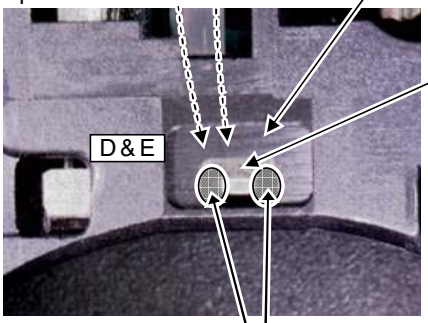

Sectional diagram of the spot to adhere in R-SKEW

* Note: Make sure to cross-link both the resin and sheet-metal parts.

* Note: Make sure to cross-link both the case and sheet-metal parts.

Spots to apply screw lock

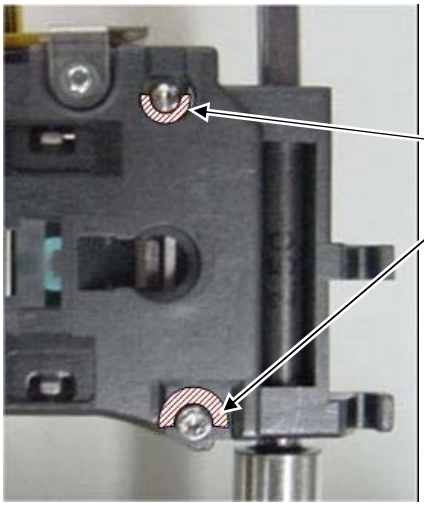

Spots to apply screw lock
Apply screw lock more than half around a screw head
* Note: Screw lock should not run off the outermost edge of the PU case.

Precautions in handling pickup

* Note: Avoid contact with the shaded part shown in the figure below.

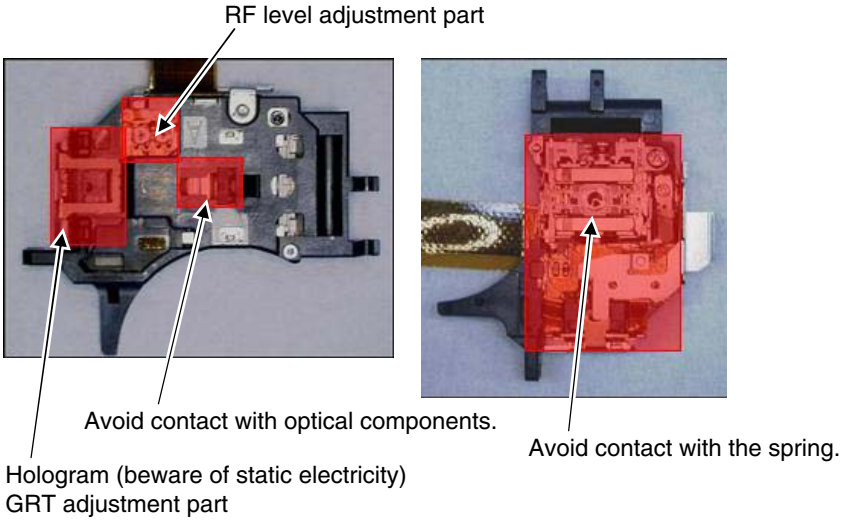

8.2 PCL OUTPUT CONFIRMATION

● PCL Output

In the normal operation mode (with the detachable panel installed, the ACC switched ON, the standby mode cancelled), shift the TESTIN IC401 (Pin 80) terminal to H.
The clock signal is output from the CLKOUT terminal IC601 (Pin 87).
The frequency of the clock signal is 9.375 MHz that is three 4th of the fundamental frequency.
The clock signal should be 9.375 MHz (± 375 Hz).
If the clock signal is out of the range, the X'tal (X401) should be replaced with new one.

9. EXPLODED VIEWS AND PARTS LIST

NOTES : • *Parts marked by " * " are generally unavailable because they are not in our Master Spare Parts List.*
• *The ⚠ mark found on some component parts indicates the importance of the safety factor of the part. Therefore, when replacing, be sure to use parts of identical designation.*
• *Screw adjacent to▽ mark on the product are used for disassembly.*
• *For the applying amount of lubricants or glue, follow the instructions in this manual. (In the case of no amount instructions,apply as you think it appropriate.)*

9.1 PACKING

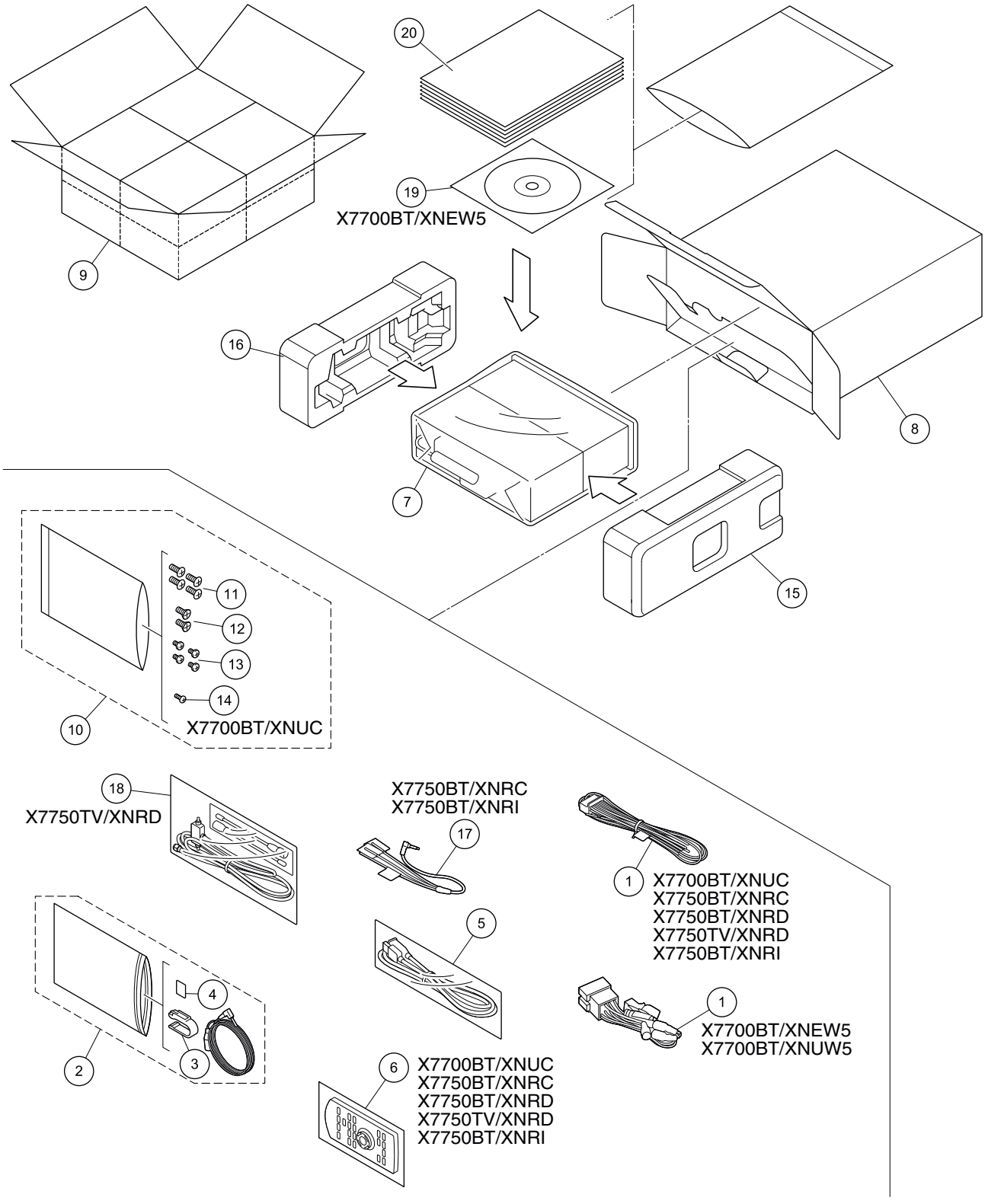

(1) PACKING SECTION PARTS LIST

Mark	No.	Description	Part No.
	1	Cord Assy	See Contrast table (2)
	2	Microphone Assy	CPM1083
	3	Holder	CZN7192
	4	Cushion	CZN7193
	5	USB Extended Cable	CDP1587
	6	Card Remote Control Unit	See Contrast table (2)
	7	Cover	See Contrast table (2)
	8	Unit Box	See Contrast table (2)
	9	Contain Box	See Contrast table (2)
	10	Screw Assy	See Contrast table (2)
	11	Screw	BMZ50P060FTC
	12	Screw	CMZ50P060FTC
	13	Screw (M4 x 3)	CBA1870
	14	Screw	See Contrast table (2)
	15	Protector	CHP4684
	16	Protector	CHP4685
	17	Cord Assy	See Contrast table (2)
	18	Rod Antenna	See Contrast table (2)
	19	IM CD-ROM	See Contrast table (2)
*	20-1	Warranty Card	See Contrast table (2)
	20-2	Owner's Manual	See Contrast table (2)
	20-3	Installation Manual	See Contrast table (2)
	20-4	Quick Start Guide	See Contrast table (2)
*	20-5	Caution Card	See Contrast table (2)
*	20-6	Caution Card	See Contrast table (2)

(2) CONTRAST TABLE

AVH-X7700BT/XNUC, AVH-X7700BT/XNEW5, AVH-X7700BT/XNUW5, AVH-X7750BT/XNRC, AVH-X7750BT/XNRD, AVH-X7750TV/XNRD and AVH-X7750BT/XNRI are constructed the same except for the following:

Mark	No.	Description	AVH-X7700BT/XNUC	AVH-X7700BT/XNEW5	AVH-X7700BT/XNUW5	AVH-X7750BT/XNRC
	1	Cord Assy	CDP1665	CDP1670	CDP1670	CDP1665
	6	Card Remote Control Unit	CXE5116	Not used	Not used	CXE5116
	7	Cover	CEG1544	CEG1474	CEG1474	CEG1474
	8	Unit Box	CHG8752	CHG8750	CHG8751	CHG8753
	9	Contain Box	CHL8752	CHL8750	CHL8751	CHL8753
	10	Screw Assy	CEC4353	CEC2991	CEC2991	CEC2991
	14	Screw	BPZ20P060FTC	Not used	Not used	Not used
	17	Cord Assy	Not used	Not used	Not used	CDP1655
	18	Rod Antenna	Not used	Not used	Not used	Not used
	19	IM CD-ROM	Not used	CPJ1485	Not used	Not used
*	20-1	Warranty Card	QRY3001	CRY1376	CRY1376	Not used
	20-2	Owner's Manual	CRD4829	Not used	CRB4468	CRD4830
	20-3	Installation Manual	Not used	CRD4828	Not used	Not used
	20-4	Quick Start Guide	Not used	CRD4827	Not used	Not used
*	20-5	Caution Card	Not used	CRP1436	Not used	Not used
*	20-6	Caution Card	Not used	CRP1441	Not used	Not used

Mark	No.	Description	AVH-X7750BT/XNRD	AVH-X7750TV/XNRD	AVH-X7750BT/XNRI
	1	Cord Assy	CDP1665	CDP1665	CDP1665
	6	Card Remote Control Unit	CXE5116	CXE5116	CXE5116
	7	Cover	CEG1474	CEG1474	CEG1474
	8	Unit Box	CHG8754	CHG8761	CHG8755
	9	Contain Box	CHL8754	CHL8761	CHL8755
	10	Screw Assy	CEC2991	CEC2991	CEC2991
	14	Screw	Not used	Not used	Not used
	17	Cord Assy	Not used	Not used	CDP1655
	18	Rod Antenna	Not used	CXE7989	Not used
	19	IM CD-ROM	Not used	Not used	Not used
*	20-1	Warranty Card	Not used	Not used	Not used
	20-2	Owner's Manual	CRD4831	CRD4831	CRD4832
	20-3	Installation Manual	Not used	Not used	Not used
	20-4	Quick Start Guide	Not used	Not used	Not used
*	20-5	Caution Card	Not used	Not used	Not used
*	20-6	Caution Card	Not used	Not used	Not used

Owner's Manual,Installation Manual

Part No.	Language
CRB4468	Russian
CRD4827	English, French, Italian, Spanish(Espanol), German, Dutch
CRD4828	English, French, Italian, Spanish(Espanol), German, Dutch
CRD4829	English, French, Spanish(Espanol)
CRD4830	English, Traditional Chinese
CRD4831	English, Spanish(Espanol), Portuguese(B)
CRD4832	English, Arabic, Persian

CONTENTS OF CD-ROM (Operation Manual), CPJ1485

Part No.	Language
*CRB4455	English
*CRB4456	French
*CRB4457	Italian
*CRB4458	Spanish(Espanol)
*CRB4459	German
*CRB4460	Dutch
*CRB4461	Swedish
*CRB4462	Norwegian
*CRB4463	Finnish
*CRB4464	Danish
*CRB4465	Portuguese
*CRB4466	Greek
*CRB4467	Turkish

All operation manuals are supplied in PDF files by the CD-ROM.
Regarding the availability of paper manual, contact Pioneer Service representative in your region.

9.2 EXTERIOR (1)

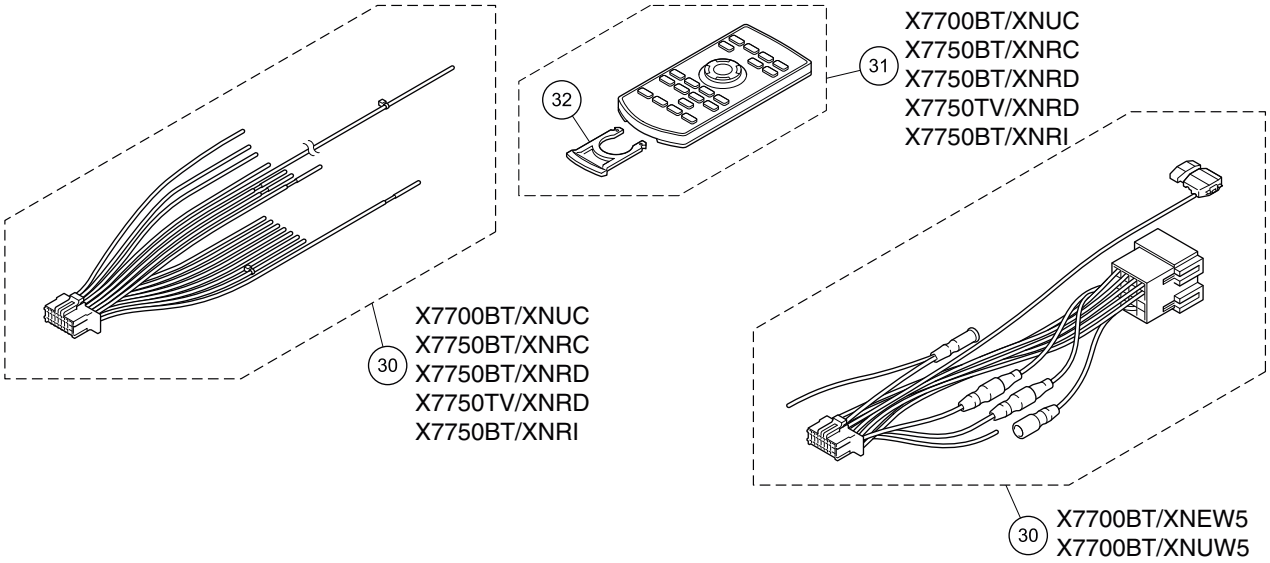

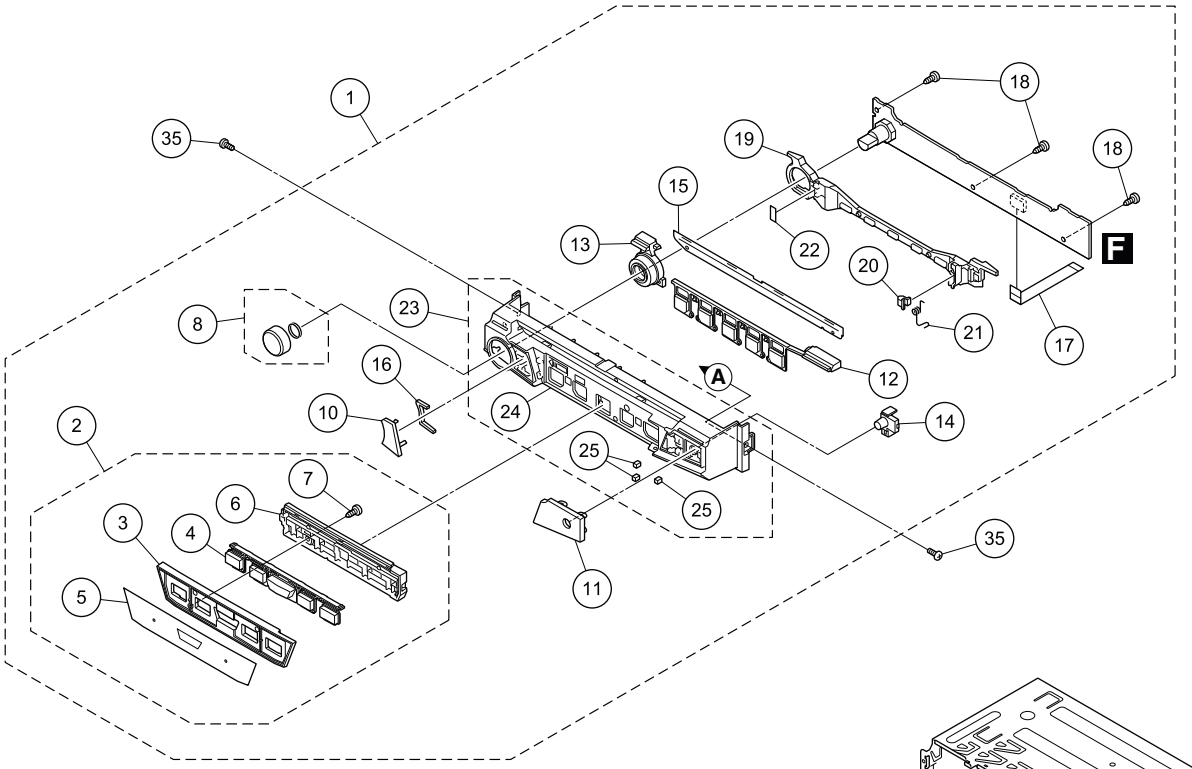

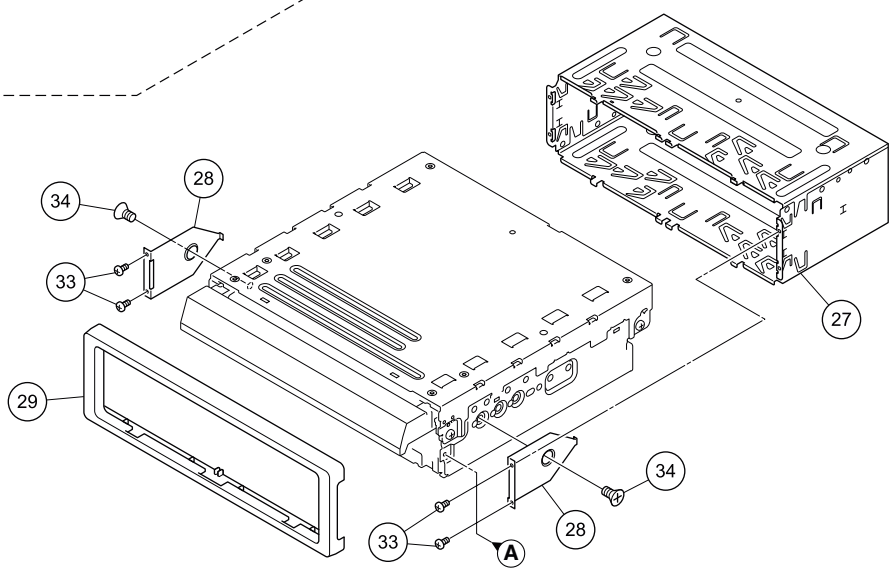

(1) EXTERIOR (1) SECTION PARTS LIST

Mark	No.	Description	Part No.
	1	Grille Assy	See Contrast table (2)
	2	Detach Grille Assy	See Contrast table (2)
	3	Grille	CNU2892
	4	Button	CAI4446
	5	Plate	See Contrast table (2)
	6	Cover	CNU2893
	7	Screw	BPZ20P060FTC
	8	Knob Unit	CXE5949
	9	•••••	
	10	Button (DISP)	CAI4443
	11	Button (EJECT)	CAI4444
	12	Button	CAI4445
	13	Lighting Conductor	CNW3299
	14	Lighting Conductor	CNW3301
	15	Cover	CNN4266
	16	Cushion	CNN4832
	17	FFC	CDD1065
	18	Screw	BPZ20P060FTC
	19	Lighting Conductor	CNW3300
	20	Arm	CNV9891
	21	Spring	CBH2997
	22	Sheet	CNN4939
	23	Service Grille Unit	CXX7710
	24	Grille Unit	CXE7594
	25	Cushion	QNM3094
	26	•••••	
	27	Holder	CND3854
	28	Bracket	CND3855
	29	Panel	CNU2269
	30	Cord Assy	See Contrast table (2)
	31	Card Remote Control Unit	See Contrast table (2)
	32	Battery Cover	See Contrast table (2)
	33	Screw	BMZ20P025FTC
	34	Screw	CMZ50P060FTC
	35	Screw	ISS26P055FTC

(2) CONTRAST TABLE

AVH-X7700BT/XNUC, AVH-X7700BT/XNEW5, AVH-X7700BT/XNUW5, AVH-X7750BT/XNRC, AVH-X7750BT/XNRD, AVH-X7750TV/XNRD and AVH-X7750BT/XNRI are constructed the same except for the following:

Mark	No.	Description	AVH-X7700BT/XNUC	AVH-X7700BT/XNEW5	AVH-X7700BT/XNUW5	AVH-X7750BT/XNRC
	1	Grille Assy	CXE7714	CXE7714	CXE7714	CXE7715
	2	Detach Grille Assy	CXE7721	CXE7721	CXE7721	CXE7722
	5	Plate	CNN4833	CNN4833	CNN4833	CNN4951
	30	Cord Assy	CDP1665	CDP1670	CDP1670	CDP1665
	31	Card Remote Control Unit	CXE5116	Not used	Not used	CXE5116
	32	Battery Cover	CNU1624	Not used	Not used	CNU1624

Mark	No.	Description	AVH-X7750BT/XNRD	AVH-X7750TV/XNRD	AVH-X7750BT/XNRI
	1	Grille Assy	CXE7715	CXE7716	CXE7715
	2	Detach Grille Assy	CXE7722	CXE7723	CXE7722
	5	Plate	CNN4951	CNN4953	CNN4951
	30	Cord Assy	CDP1665	CDP1665	CDP1665
	31	Card Remote Control Unit	CXE5116	CXE5116	CXE5116
	32	Battery Cover	CNU1624	CNU1624	CNU1624

9.3 EXTERIOR (2)

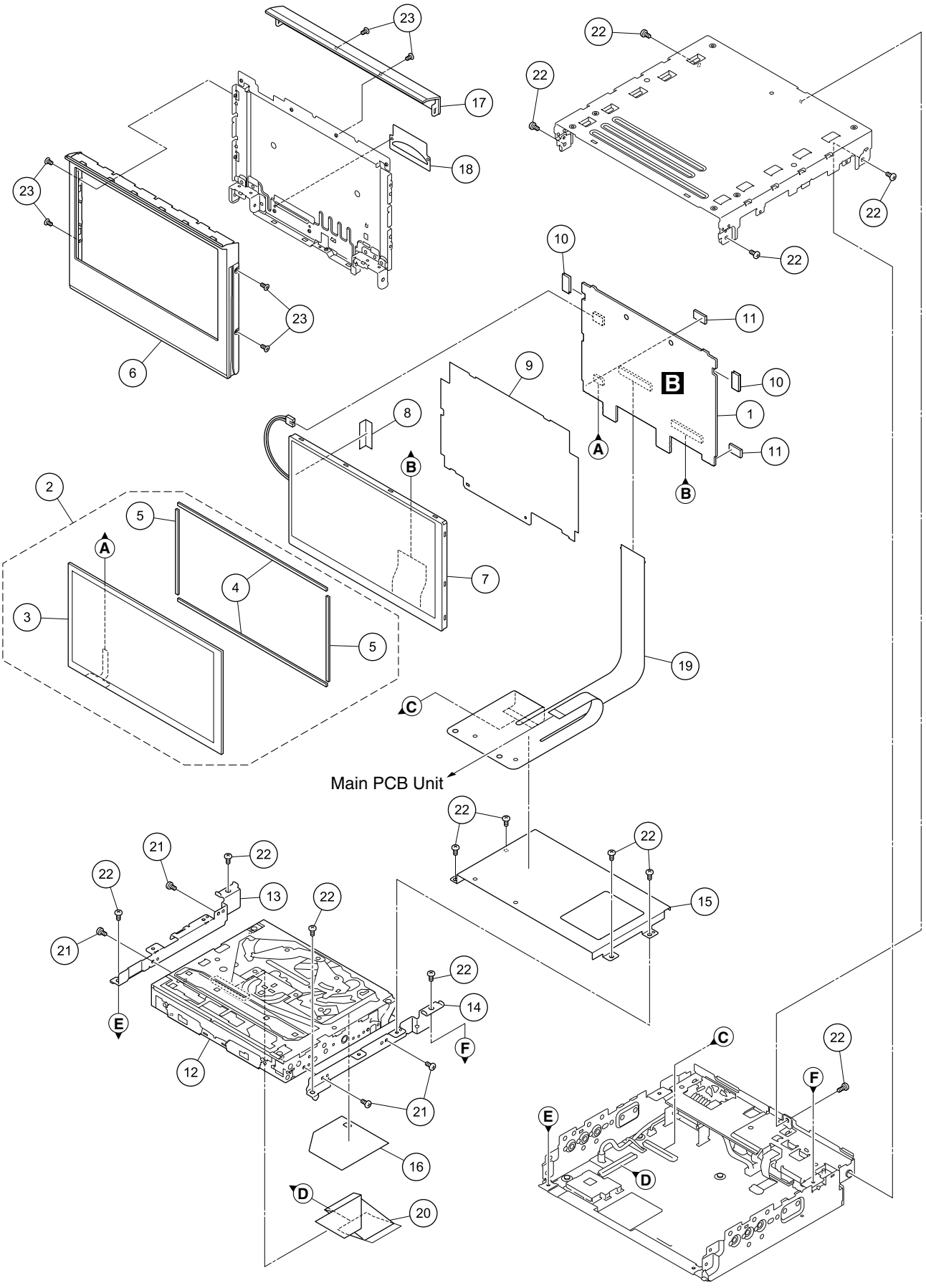

EXTERIOR (2) SECTION PARTS LIST

Mark	No.	Description	Part No.
	1	Monitor Unit	CWN9246
	2	Touch Panel Assy	CXE5830
	3	Touch Panel	CSX1196
	4	Cushion	CNN4271
	5	Cushion	CNN4272
	6	Grille	
		X7700BT/XNUC	CNU2178
		X7700BT/XNEW5	CNU3031
		X7700BT/XNUW5	CNU3031
		X7750BT/XNRC	CNU2178
		X7750BT/XNRD	CNU2178
		X7750TV/XNRD	CNU2178
		X7750BT/XNRI	CNU2178
	7	TFT LCD	CWX4352
	8	Sheet	CNN1694
	9	Insulator	CNN4259
	10	Sheet	CNN1750
	11	Gasket	CNN4740
	12	DVD Mechanism Module (MS7.2)	CXK6903
	13	Bracket	CND6668
	14	Bracket	CND6669
	15	Bracket	CND6667
	16	Insulator	CNN2764
	17	Cover	CNU3032
	18	Sheet	CNN4437
	19	FPC	CNQ7214
	20	FFC	CDD1066
	21	Screw	BMZ20P025FTC
	22	Screw	BSZ26P060FTC
	23	Screw (M2 x 2)	CBA1872

9.4 EXTERIOR (3)

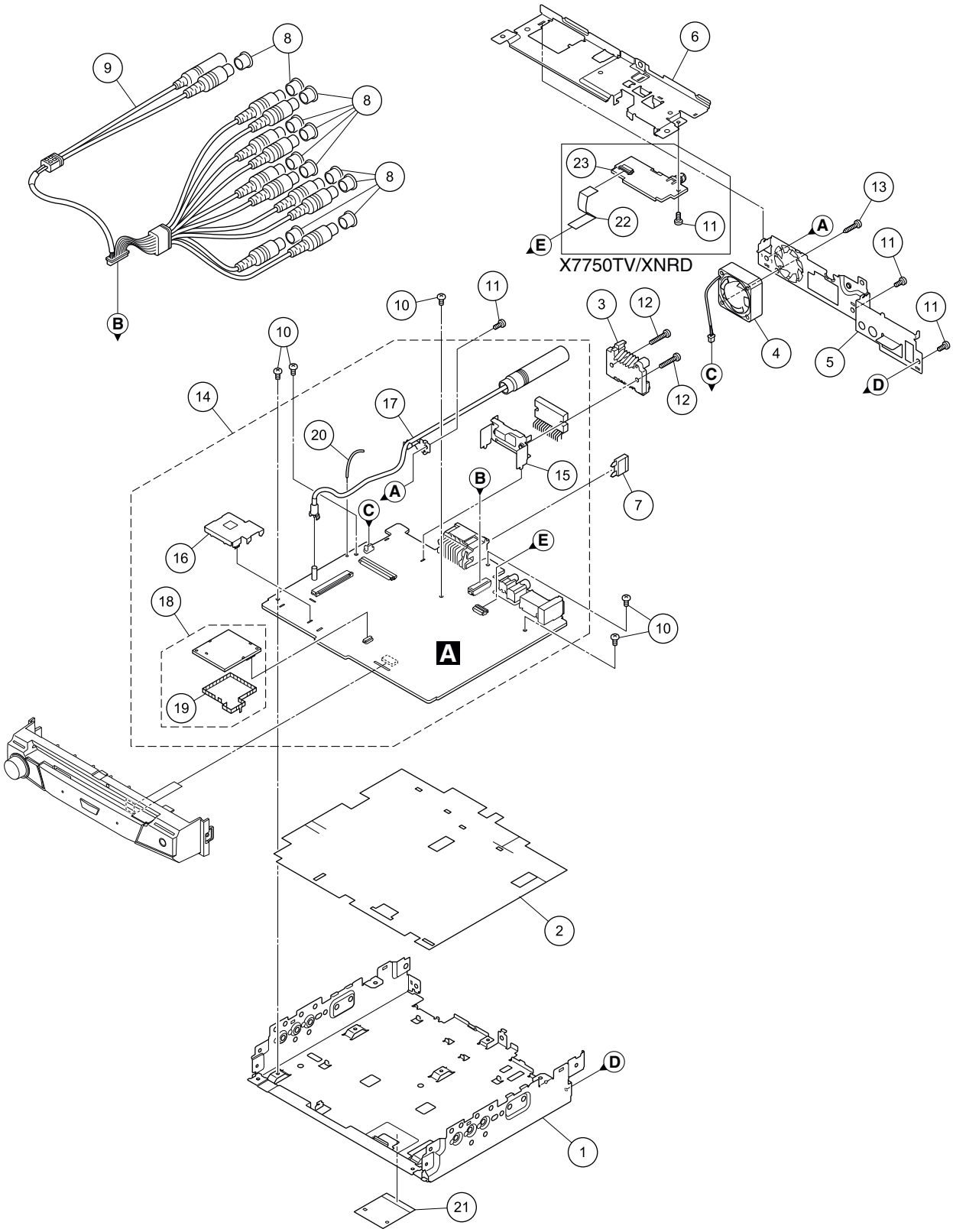

(1) EXTERIOR (3) SECTION PARTS LIST

Mark	No.	Description	Part No.
	1	Chassis	CNA3339
	2	Insulator	CNN4835
	3	Heat Sink	CNR2177
	4	Fan Motor	CXM1460
	5	Holder	See Contrast table (2)
	6	Holder	CND7195
⚠	7	Fuse (10 A)	YEK5001
	8	Cap	CNV6727
	9	Cord Assy	CDF1179
	10	Screw	BMZ26P040FTC
	11	Screw	BSZ26P060FTC
	12	Screw	BSZ26P160FTC
	13	Screw	BPZ26P080FTC
	14	Mother Unit	See Contrast table (2)
	15	Holder	CND6671
	16	Shield Case	CND7316
	17	Antenna Cable	CDH1390
	18	BT Module	YWX5053
	19	Shield Case	YNC5123
	20	Clamper (CN2201)	CEF1046
	21	Sheet	CNN4834
	22	FFC	See Contrast table (2)
	23	DTT Tuner	See Contrast table (2)

(2) CONTRAST TABLE

AVH-X7700BT/XNUC, AVH-X7700BT/XNEW5, AVH-X7700BT/XNUW5, AVH-X7750BT/XNRC, AVH-X7750BT/XNRD, AVH-X7750TV/XNRD and AVH-X7750BT/XNRI are constructed the same except for the following

Mark	No.	Description	AVH-X7700BT/XNUC	AVH-X7700BT/XNEW5	AVH-X7700BT/XNUW5	AVH-X7750BT/XNRC
	5	Holder	CND7192	CND7192	CND7192	CND7192
	14	Mother Unit	CWN8784	CWN8782	CWN8783	CWN8785
	22	FFC	Not used	Not used	Not used	Not used
	23	DTT Tuner	Not used	Not used	Not used	Not used

Mark	No.	Description	AVH-X7750BT/XNRD	AVH-X7750TV/XNRD	AVH-X7750BT/XNRI
	5	Holder	CND7192	CND7194	CND7192
	14	Mother Unit	CWN8787	CWN8786	CWN8788
	22	FFC	Not used	CDD1067	Not used
	23	DTT Tuner	Not used	CWE2519	Not used

9.5 EXTERIOR (4)

The application position of grease is referred to page XXX and page XXX.

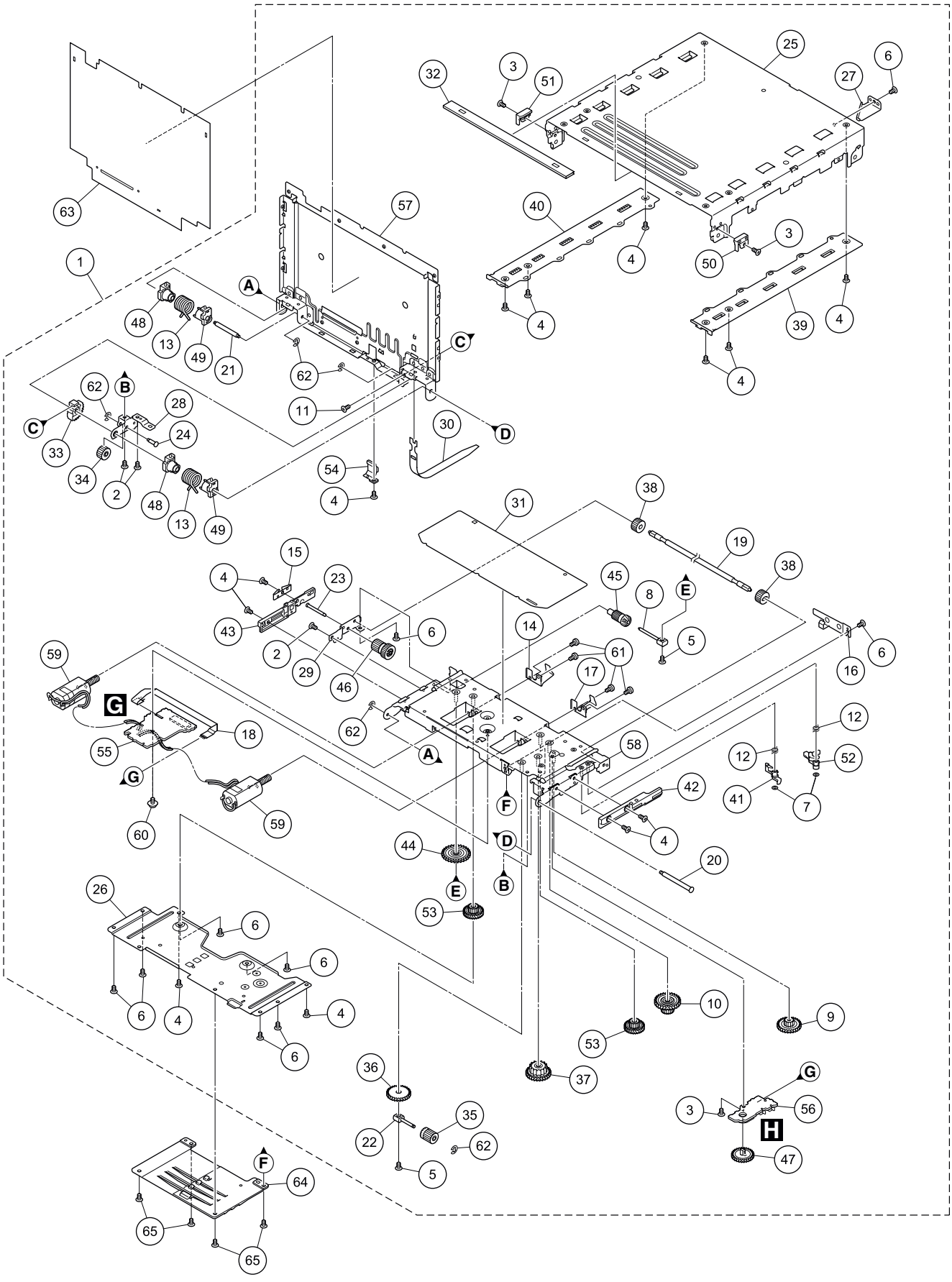

EXTERIOR (4) SECTION PARTS LIST

Mark	No.	Description	Part No.
	1	Display Module Unit	CXE5803
	2	Screw	CBA1608
	3	Screw (M2 x 1.5)	CBA1615
	4	Screw (M2 x 3)	CBA1877
	5	Screw (M2.3 x 6)	CBA2027
	6	Screw (M2 x 2)	CBA2129
	7	Washer	CBF1038
	8	Shaft	CLA4821
	9	Gear	CNR1862
	10	Gear	CNV8980
	11	Screw	EBA2003
	12	Torsion Spring	EBH3010
	13	Torsion Spring	EBH3011
	14	Plate Spring	EBL2005
	15	Plate Spring	EBL2006
	16	Plate Spring	EBL2007
	17	Plate Spring	EBL2008
	18	FFC	EDD2002
	19	Shaft	ELA3022
	20	Shaft	ELA3023
	21	Shaft	ELA3024
	22	Shaft	ELA3026
	23	Shaft	ELA3027
	24	Shaft	ELA3028
	25	Chassis	ENA3007
	26	Cover	ENC2025
	27	Lever	ENC2026
	28	Holder	ENC2027
	29	Holder	ENC2032
	30	Sheet	ENM3002
	31	Sheet	ENM3003
	32	Sheet	ENM3004
	33	Gear	ENR2001
	34	Gear	ENR2002
	35	Gear	ENR2003
	36	Gear	ENR2004
	37	Gear	ENR2005
	38	Gear	ENV3023
	39	Rack	ENV3024
	40	Rack	ENV3025
	41	Arm	ENV3026
	42	Guide	ENV3027
	43	Guide	ENV3028
	44	Gear	ENV3029
	45	Gear	ENV3030
	46	Gear	ENV3031
	47	Gear	ENV3032
	48	Holder	ENV3033
	49	Holder	ENV3034
	50	Guide	ENV3035
	51	Guide	ENV3036
	52	Arm	ENV3037
	53	Gear	ENV3038
	54	Lever	ENV3039
	55	Main PCB Unit	EWX2008
	56	SW PCB Unit	EWX2009
	57	Case Unit	EXA4010
	58	Frame Unit	EXA4011
	59	Motor Unit	EXA4013
	60	Screw	IMS20P030FTC
	61	Screw	JGZ20P025FTC
	62	Washer	YE15FTC
	63	Insulator	CNN4260
	64	Cover	CNW2687
	65	Screw (M2 x 3)	CBA1877

● The gear assembly figure of the Drive Unit

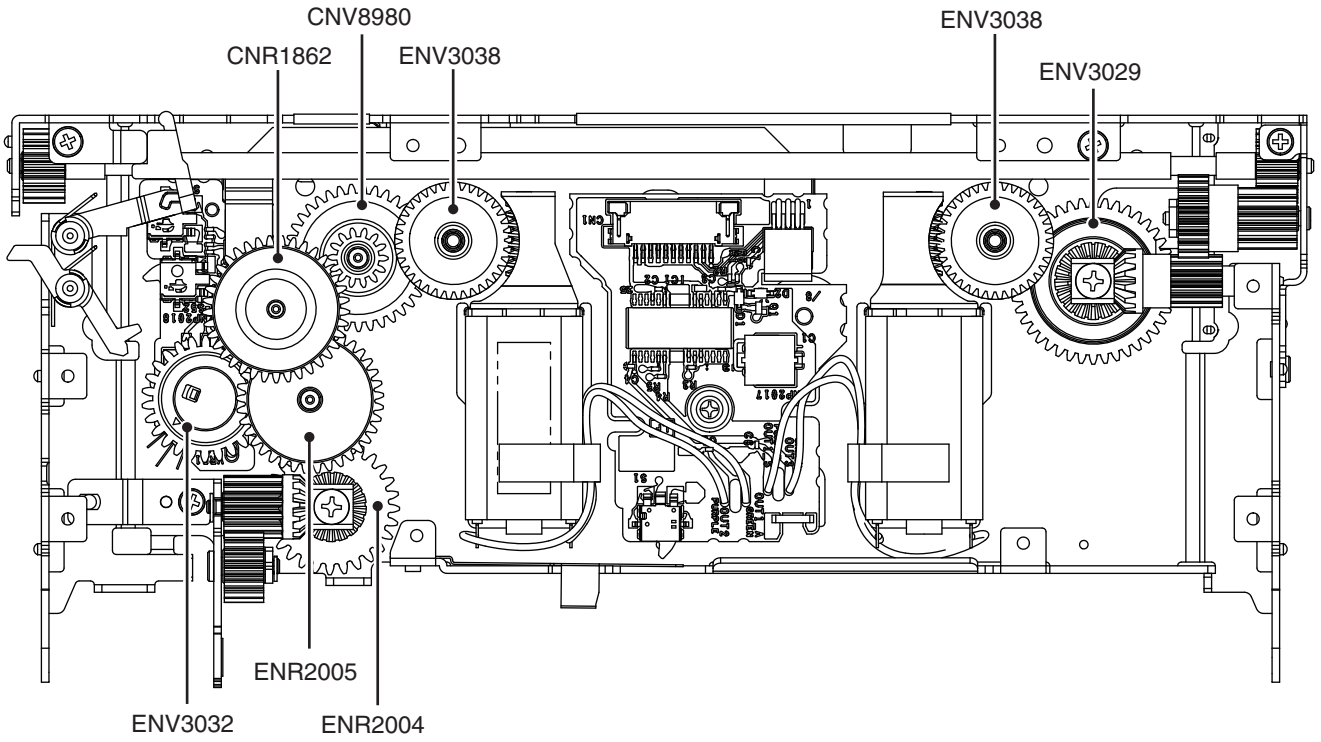

● Grease

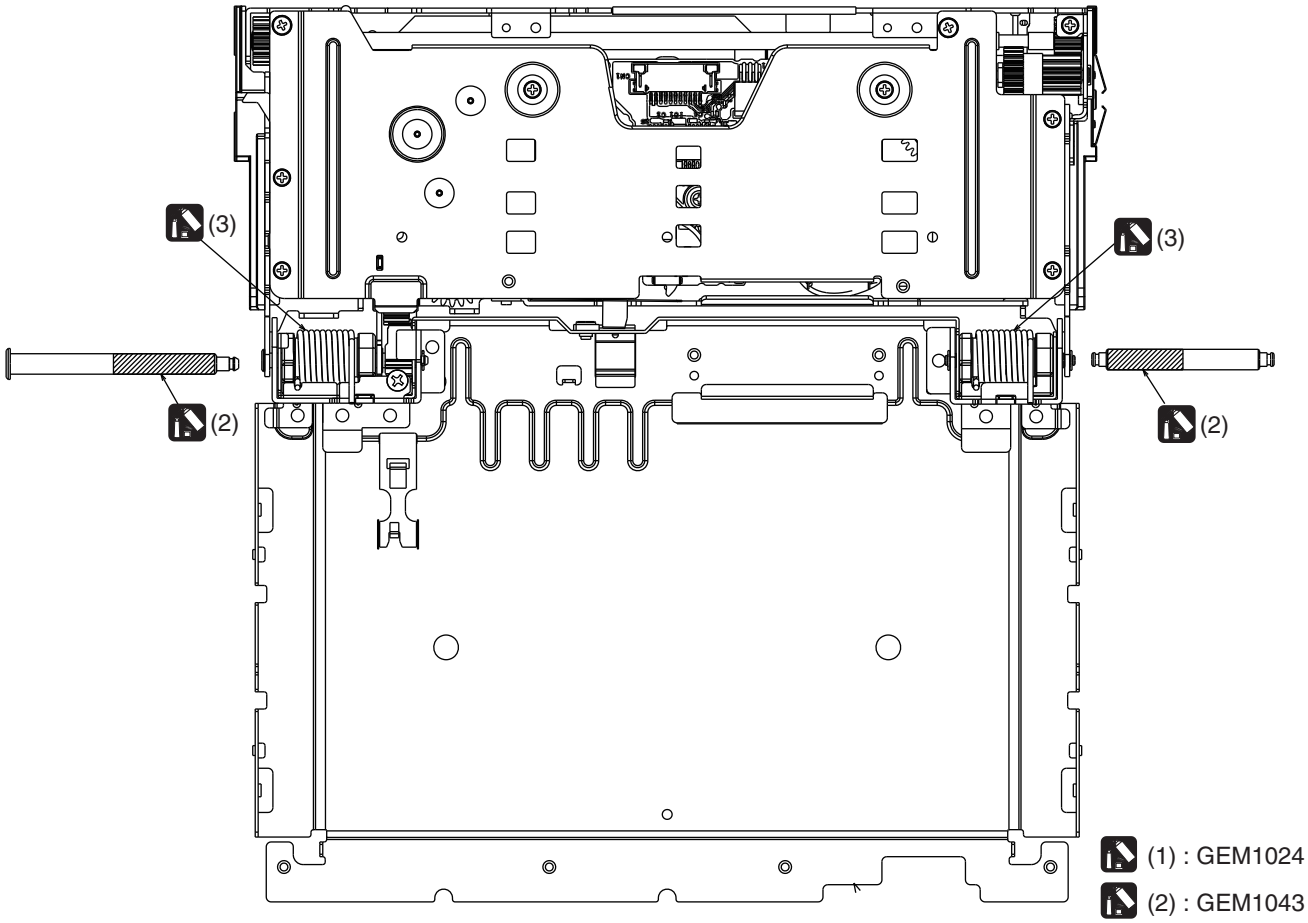

(1) : GEM1024
(2) : GEM1043
(3) : GEM1084

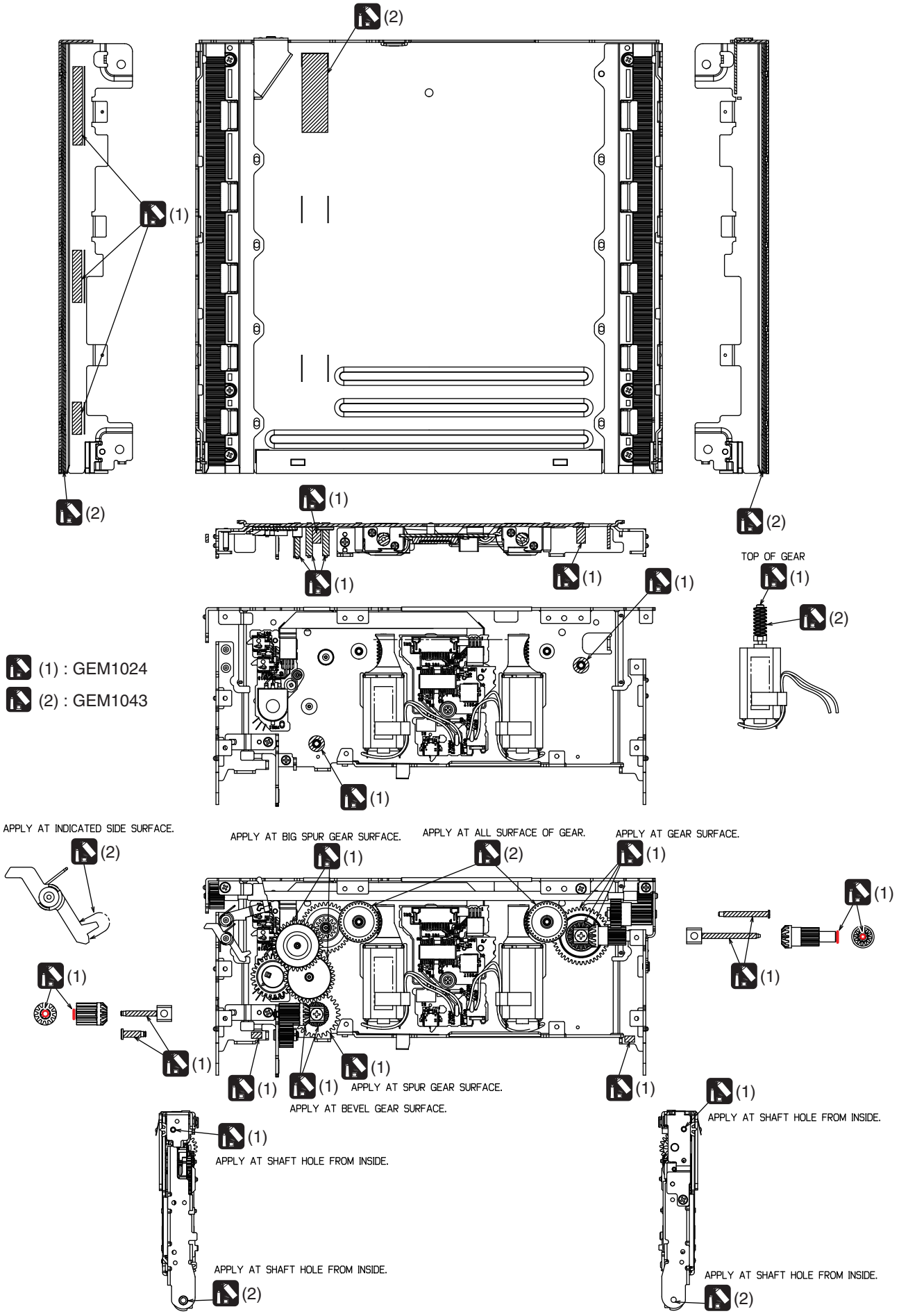
(1) : GEM1024
(2) : GEM1043
TOP OF GEAR
APPLY AT INDICATED SIDE SURFACE.
APPLY AT BIG SPUR GEAR SURFACE.
APPLY AT ALL SURFACE OF GEAR.
APPLY AT GEAR SURFACE.
APPLY AT SPUR GEAR SURFACE.
APPLY AT BEVEL GEAR SURFACE.
APPLY AT SHAFT HOLE FROM INSIDE.
APPLY AT SHAFT HOLE FROM INSIDE.
APPLY AT SHAFT HOLE FROM INSIDE.
APPLY AT SHAFT HOLE FROM INSIDE.

9.6 DVD MECHANISM MODULE

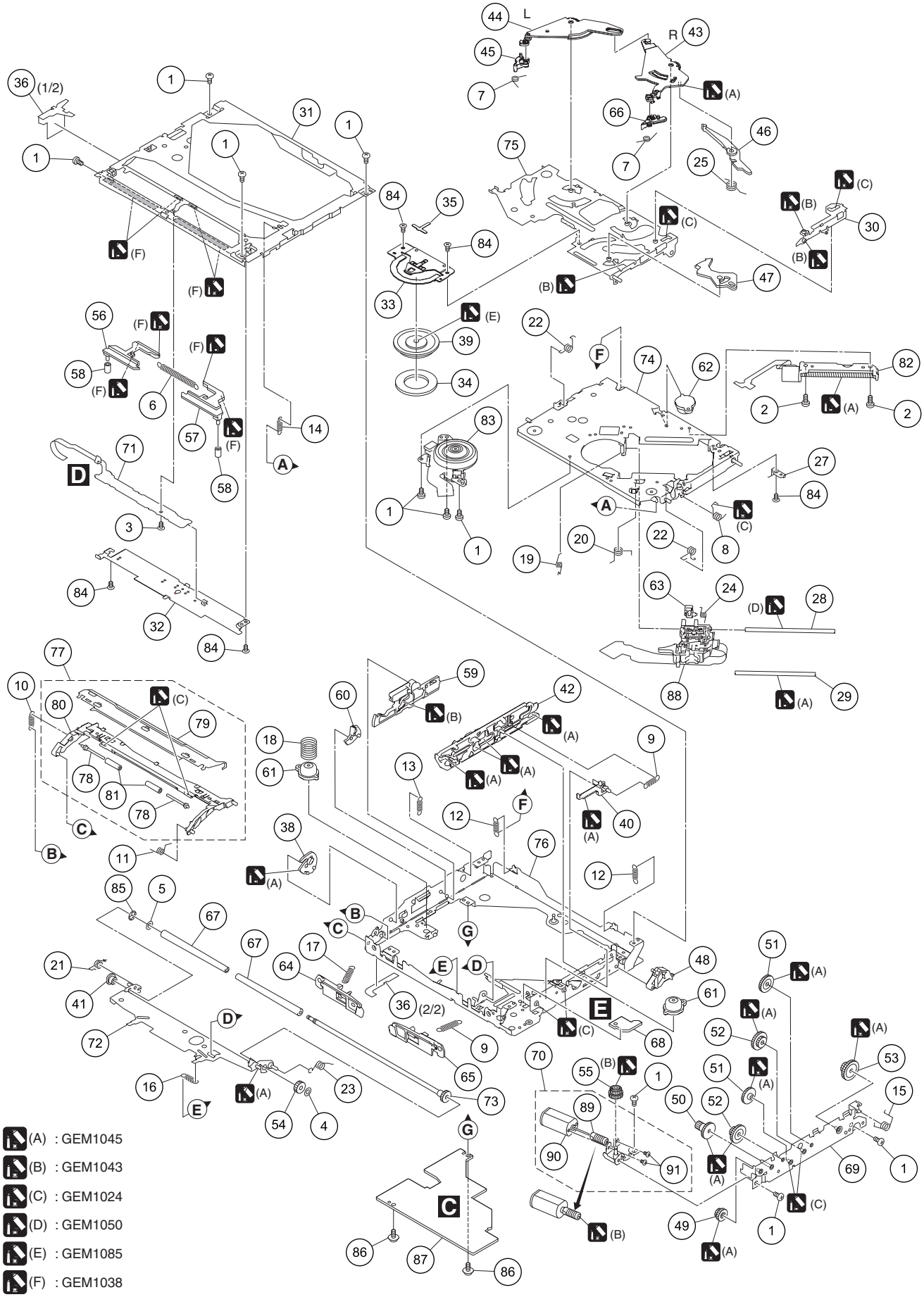

DVD MECHANISM MODULE SECTION PARTS LIST

Mark	No.	Description	Part No.
	1	Screw	BMZ20P020FTC
	2	Screw	BMZ20P025FNI
	3	Screw	CBA1787
	4	Washer	CBF1038
	5	Washer	CBF1064
	6	Spring	CBH2589
	7	Spring	CBH2590
	8	Spring	CBH2592
	9	Spring	CBH2593
	10	Spring	CBH2596
	11	Spring	CBH2597
	12	Spring	CBH2599
	13	Spring	CBH2600
	14	Spring	CBH2601
	15	Spring	CBH2604
	16	Spring	CBH2605
	17	Spring	CBH2710
	18	Spring	CBH2711
	19	Spring	CBH2890
	20	Spring	CBH2935
	21	Spring	CBH2586
	22	Spring	CBH2588
	23	Spring	CBH2898
	24	Spring	CBH2926
	25	Spring	CBH2591
	26	•••••	
	27	Spring	CBL1726
	28	Shaft	CLA4918
	29	Shaft	CLA4919
	30	Lever	CND5494
	31	Frame	CND2250
	32	Holder	CND2251
	33	Holder	CNC9939
	34	Sheet	CNN4503
	35	Sheet	CNM8283
	36	Sheet	CNM9658
	37	•••••	
	38	Cam	CNV7156
	39	Clamper	CNV7158
	40	Rack	CNV7175
	41	Collar	CNV8845
	42	Lever	CNW1926
	43	Arm	CNV8867
	44	Arm	CNV8868
	45	Arm	CNW2081
	46	Arm	CNV8871
	47	Arm	CNV8872
	48	Arm	CNV8873
	49	Gear	CNV8874
	50	Gear	CNV8875
	51	Gear	CNV8876
	52	Gear	CNV8877
	53	Gear	CNV8878
	54	Gear	CNV8879
	55	Gear	CNV8880
	56	Lever	CNV8903
	57	Lever	CNV8904
	58	Roller	CNV8905
	59	Lever	CNV8908
	60	Arm	CNV8909
	61	Damper	CNV9061
	62	Damper	CNV9062
	63	Rack	CNV9063
	64	Arm	CNV9116
	65	Arm	CNV9117
	66	Arm	CNW2082
	67	Roller	CNV7165
	68	Compound Unit(B)	CWX3394
	69	Bracket Unit	CXB8685
	70	Brush Motor Unit(LOAD)(M1)	CXE4539
	71	Compound Unit(A)	CWX4034
	72	Arm Unit	CXC5486
	73	Roller Unit	CXC5708
	74	Chassis Unit	CXC6443
	75	Arm Unit	CXC7872
*	76	Frame Unit	CXE2486
	77	Guide Unit	CXC8572
	78	Shaft	CLA4771
	79	Holder	CND5456
	80	Guide	CNV9569
	81	Collar	CNV9570
	82	Motor(STEPPING)(M2)	CXM1364
	83	Motor(SPDL)(M3)	CXM1435
	84	Screw	JFZ20P018FTC
	85	Washer	YE20FTC
	86	Screw	IMS20P030FTC
	87	DVD Core Unit(MS7.2)	CWX4606
	88	Pickup Unit(Service)	CXX2558
	89	Gear	CNW2264
	90	Motor	CXM1321
	91	Screw	JFZ14P020FTC

10. SCHEMATIC DIAGRAM

10.1 MOTHER UNIT (VEHICLE IF)

Note: When ordering service parts, be sure to refer to " EXPLODED VIEWS AND PARTS LIST" or "ELECTRICAL PARTS LIST".

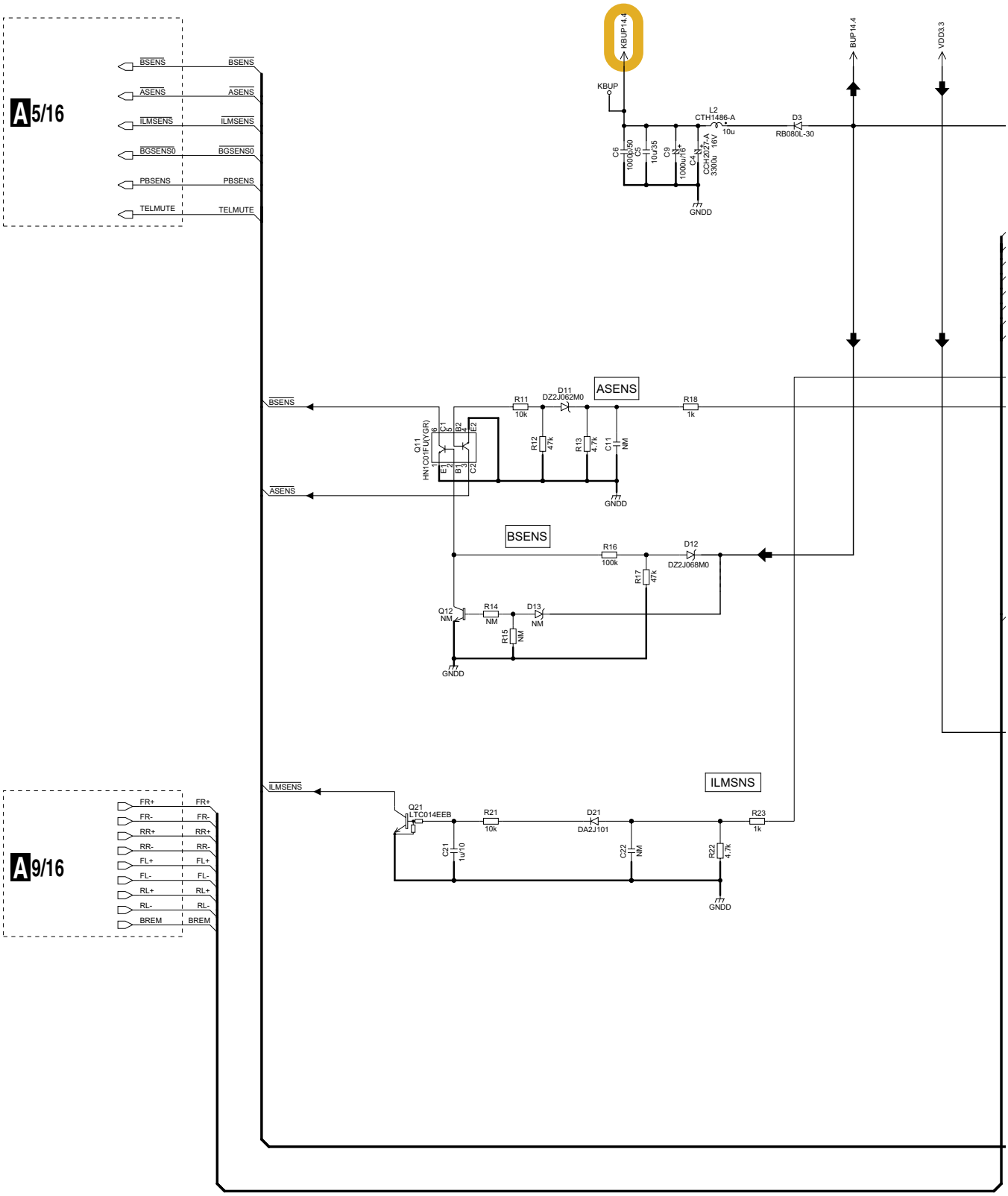

A1/16

A1/16 MOTHER UNIT (VEHICLE IF)

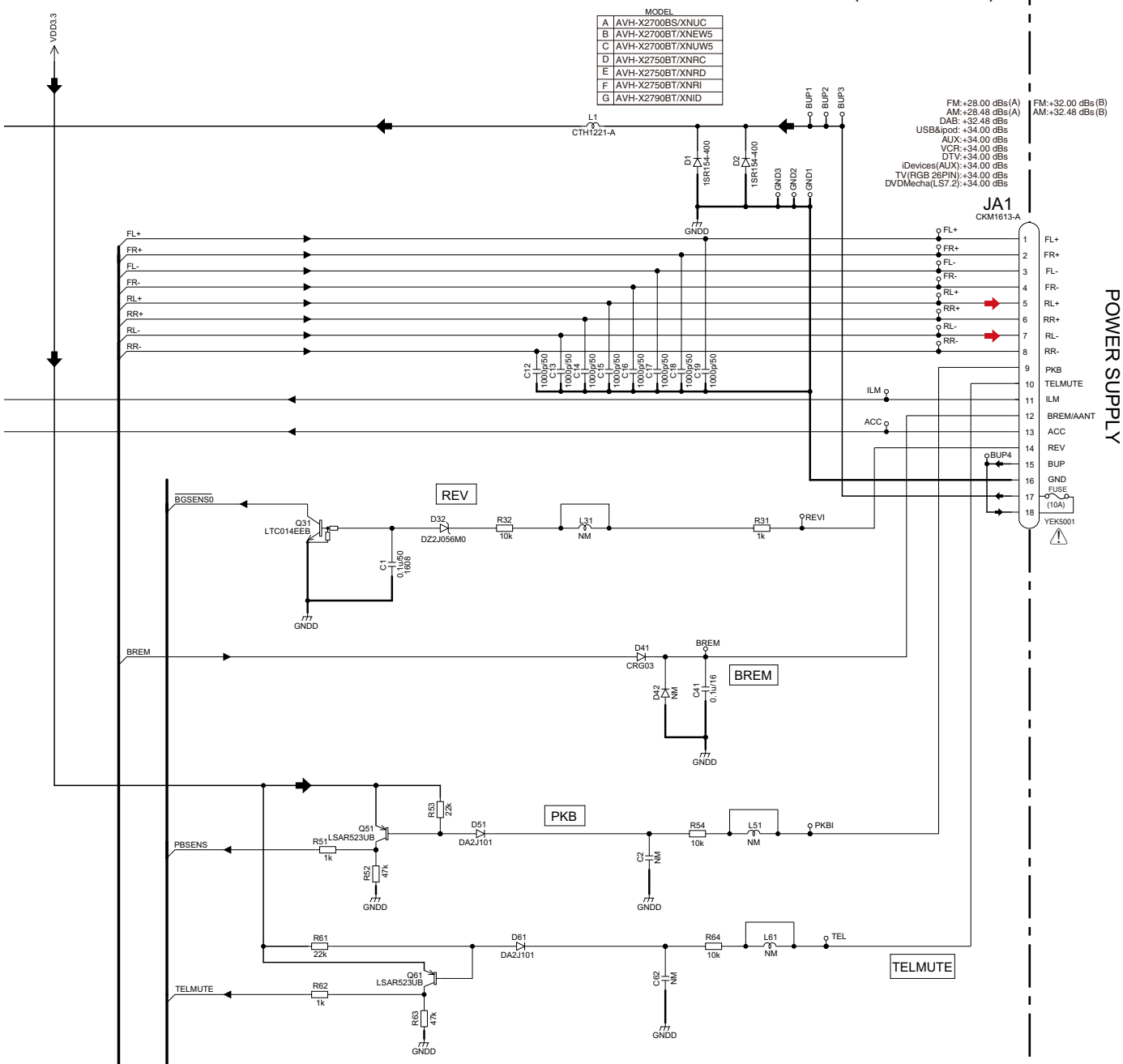

NOTE : Ref.1-100

- Symbol indicates a resistor. No differentiation is made between chip resistors and discrete resistors.
- Symbol indicates a capacitor. No differentiation is made between chip capacitors and discrete capacitors.

NM : No Mount

The ⚠ mark found on some component parts indicates the importance of the safety factor of the part. Therefore, when replacing, be sure to use parts of identical designation.

: The power supply is shown with the marked box.

POWER SUPPLY

10.2 MOTHER UNIT (PWR OTHER)

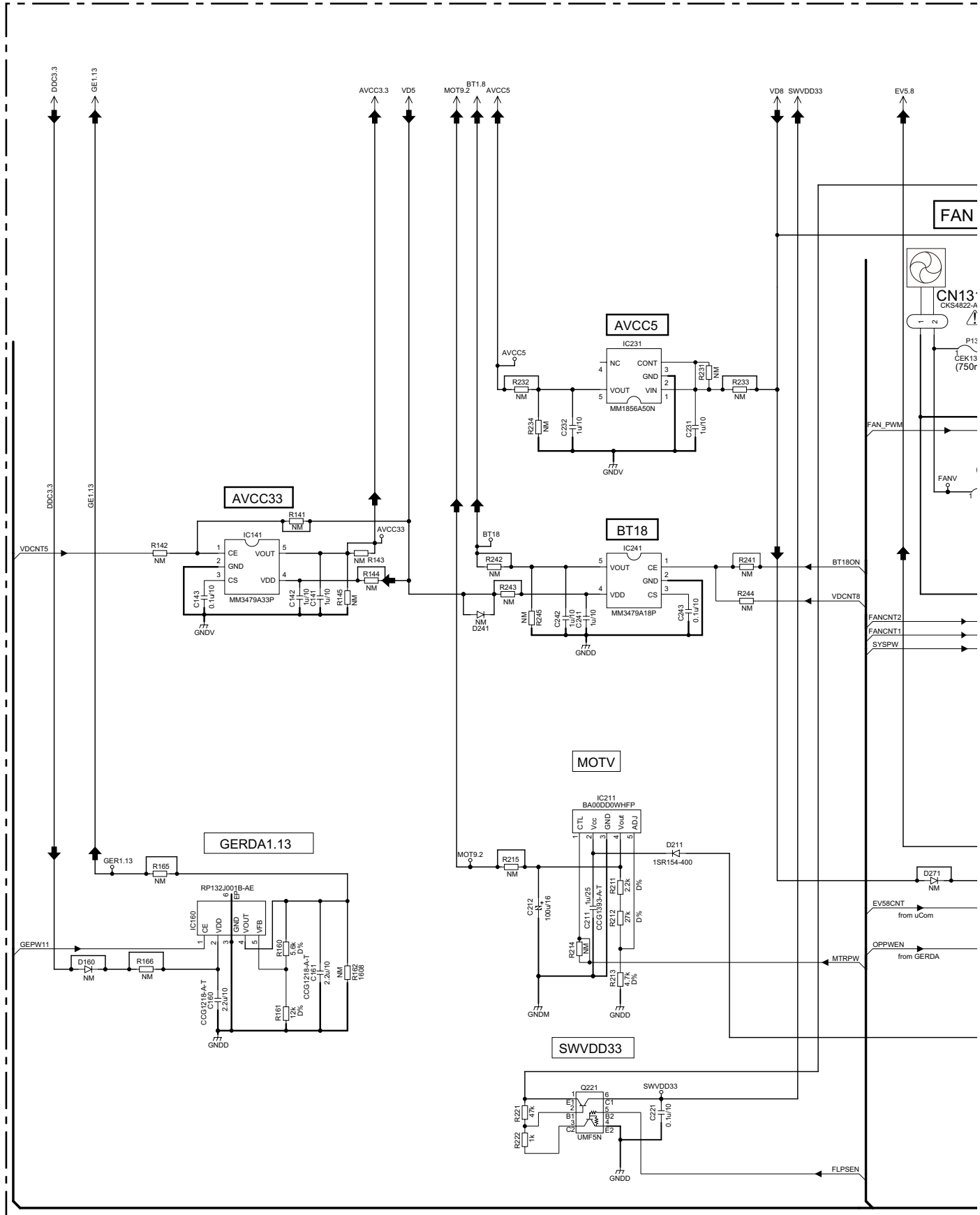

A2/16

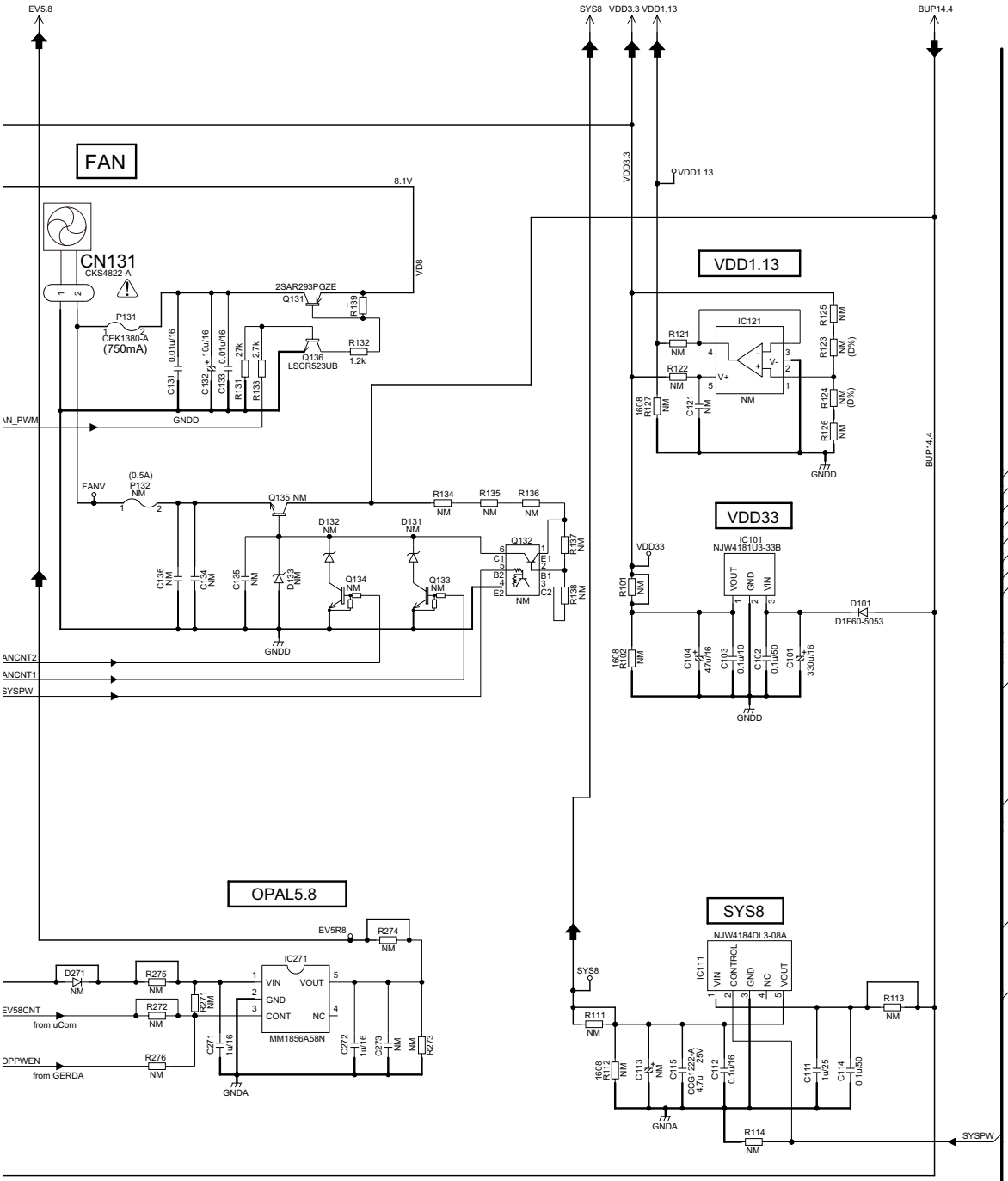

The ⚠ mark found on some component parts indicates the importance of the safety factor of the part. Therefore, when replacing, be sure to use parts of identical designation.

Ref.101-300

10.3 MOTHER UNIT (2CHDC/DC)

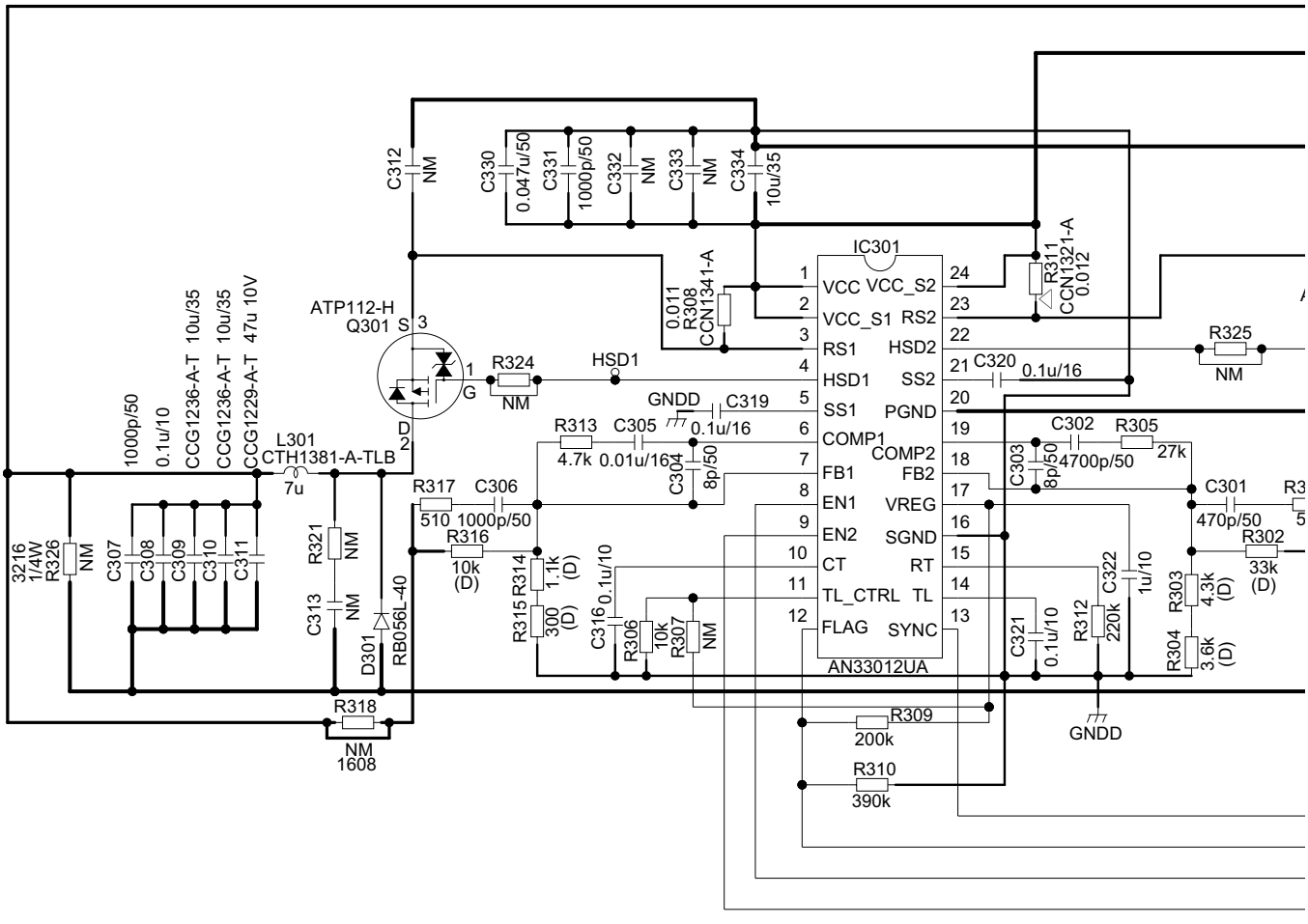

A3/16

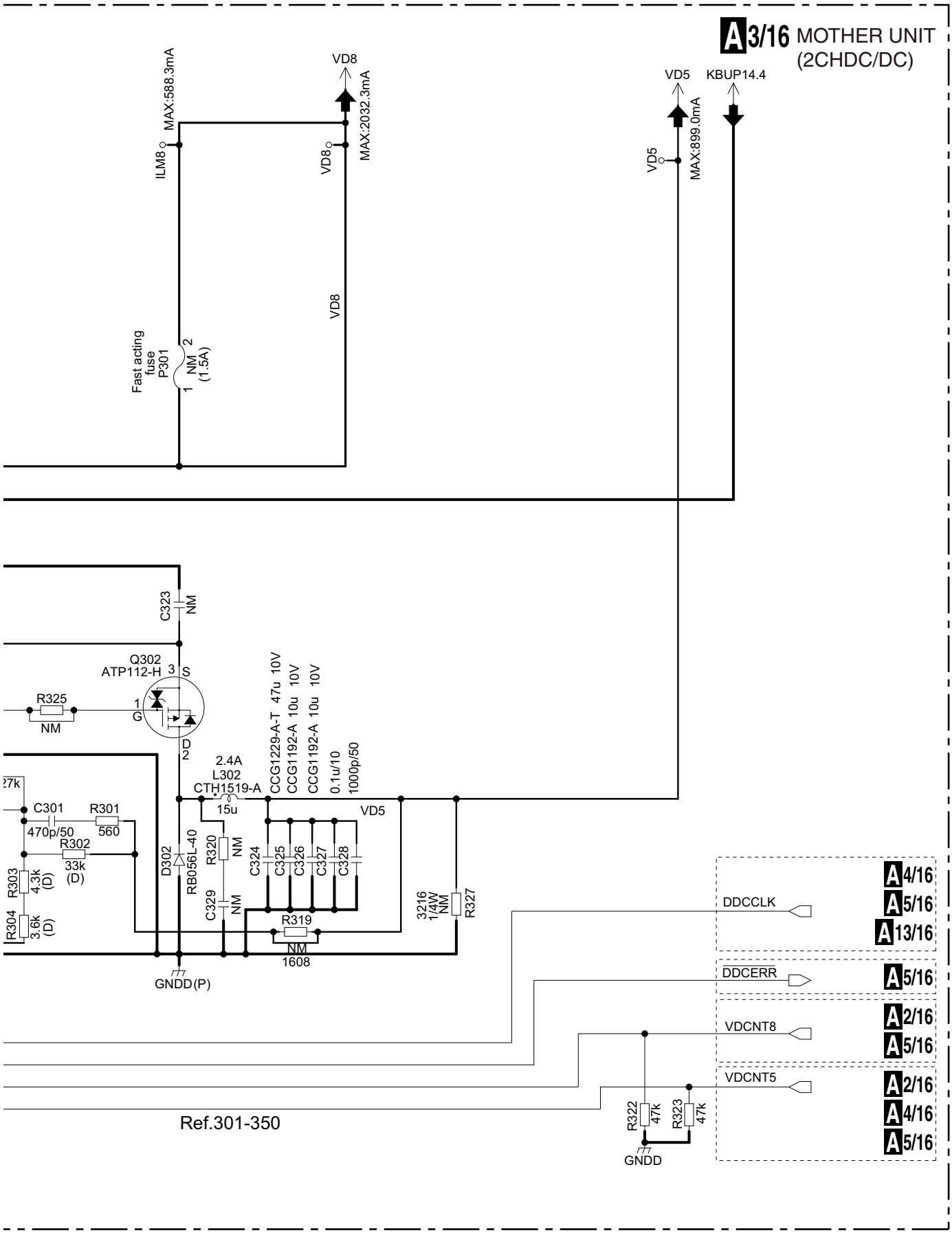
A3/16 MOTHER UNIT
(2CHDC/DC)
VD8
MAX:2032.3mA
VD5
KBUP14.4
MAX:899.0mA
MAX:588.3mA
ILM8
VD8
VD5
VD8
Fast acting fuse P301
NM (1.5A)
C323 NM
Q302 ATP112-H
R325 NM
2.4A
L302 CTH1519-A
15u
CCG1229-A-T 47u 10V
CCG1192-A 10u 10V
CCG1192-A 10u 10V
0.1u/10
1000p/50
VD5
C301 470p/50
R301 560
R302 33k (D)
R303 4.3k (D)
R304 3.6k (D)
D302 RB056L-40
R320 NM
C329 NM
C324
C325
C326
C327
C328
R319 NM 1608
3216 1/4W NM
R327
GNDD(P)
DDCCLK
DDCERR
VDCNT8
VDCNT5
A4/16
A5/16
A13/16
A5/16
A2/16
A5/16
A2/16
A4/16
A5/16
R322 47k
R323 47k
GNDD
Ref.301-350
A3/16

10.4 MOTHER UNIT (1CHDC/DC)

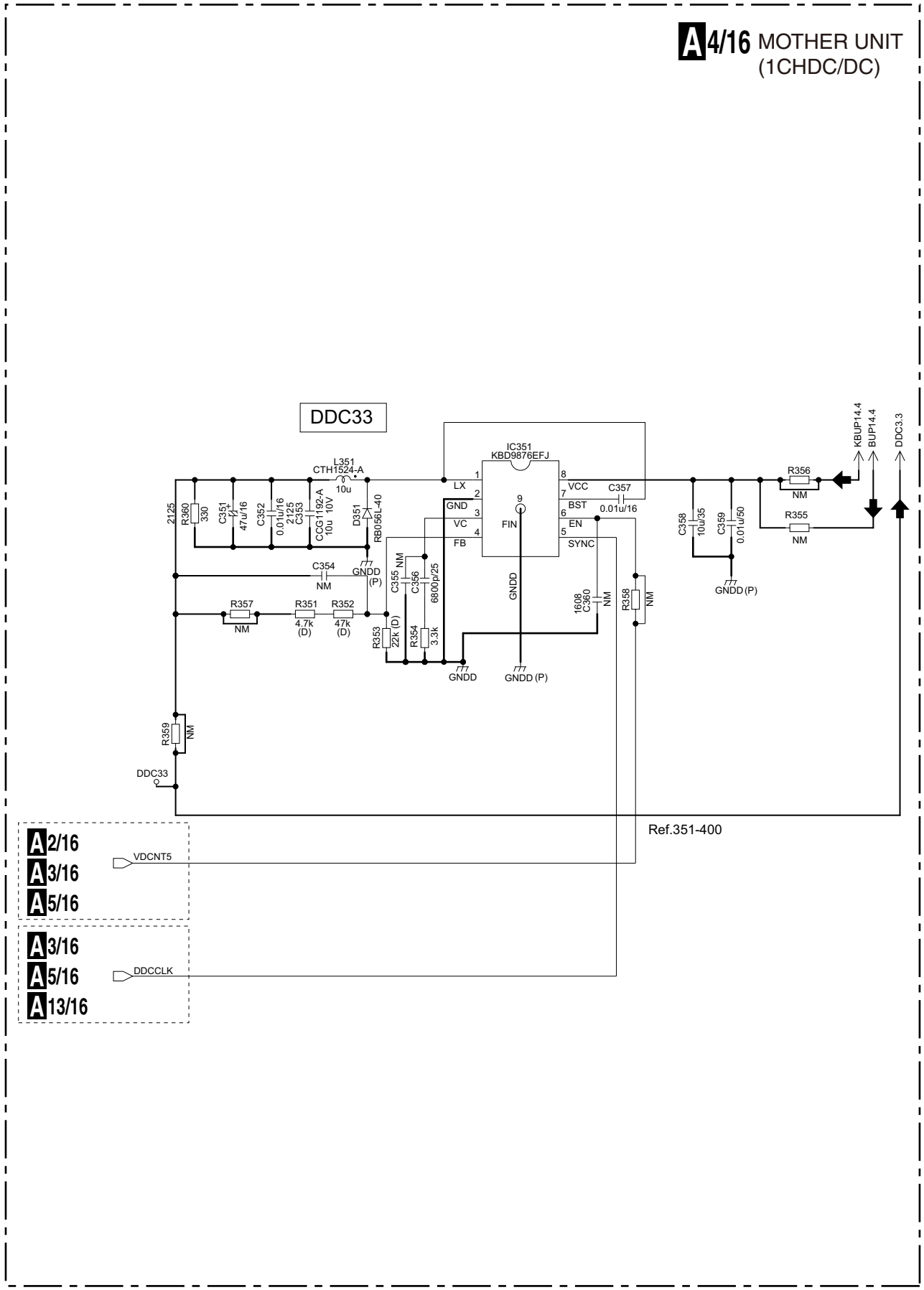

10.5 MOTHER UNIT (SYSCOM)

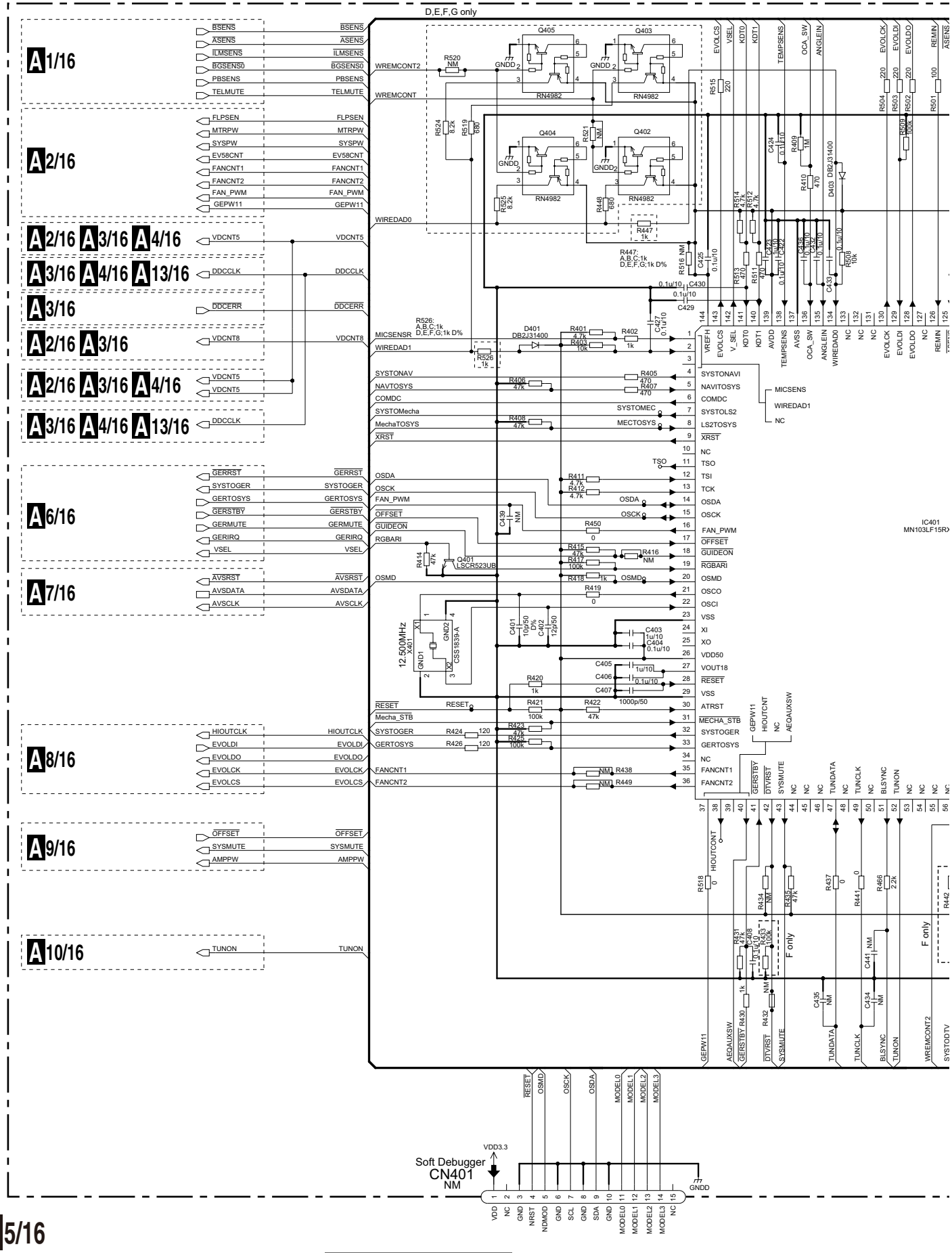

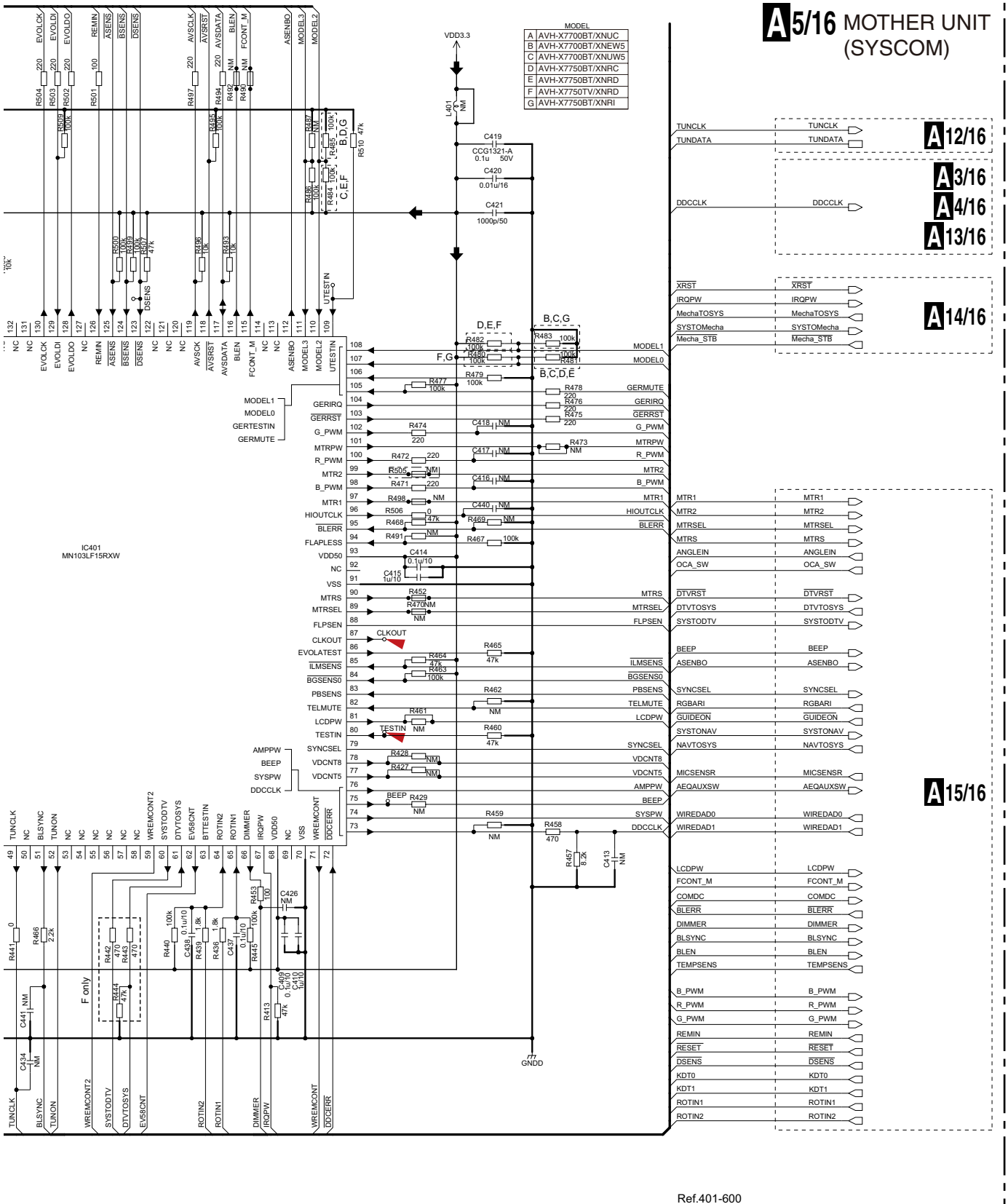
MODEL
A AVH-X7700BT/XNUC
B AVH-X7700BT/XNEW5
C AVH-X7700BT/XNUW5
D AVH-X7750BT/XNRC
E AVH-X7750BT/XNRD
F AVH-X7750TV/XNRD
G AVH-X7750BT/XNRI
IC401
MN103LF15RXW
F only
B,D,G
C,E,F
D,E,F
B,C,G
F,G
B,C,D,E
A12/16
A3/16
A4/16
A13/16
A14/16
A15/16
Ref.401-600

10.6 MOTHER UNIT (GERDA) (1/2 scale)

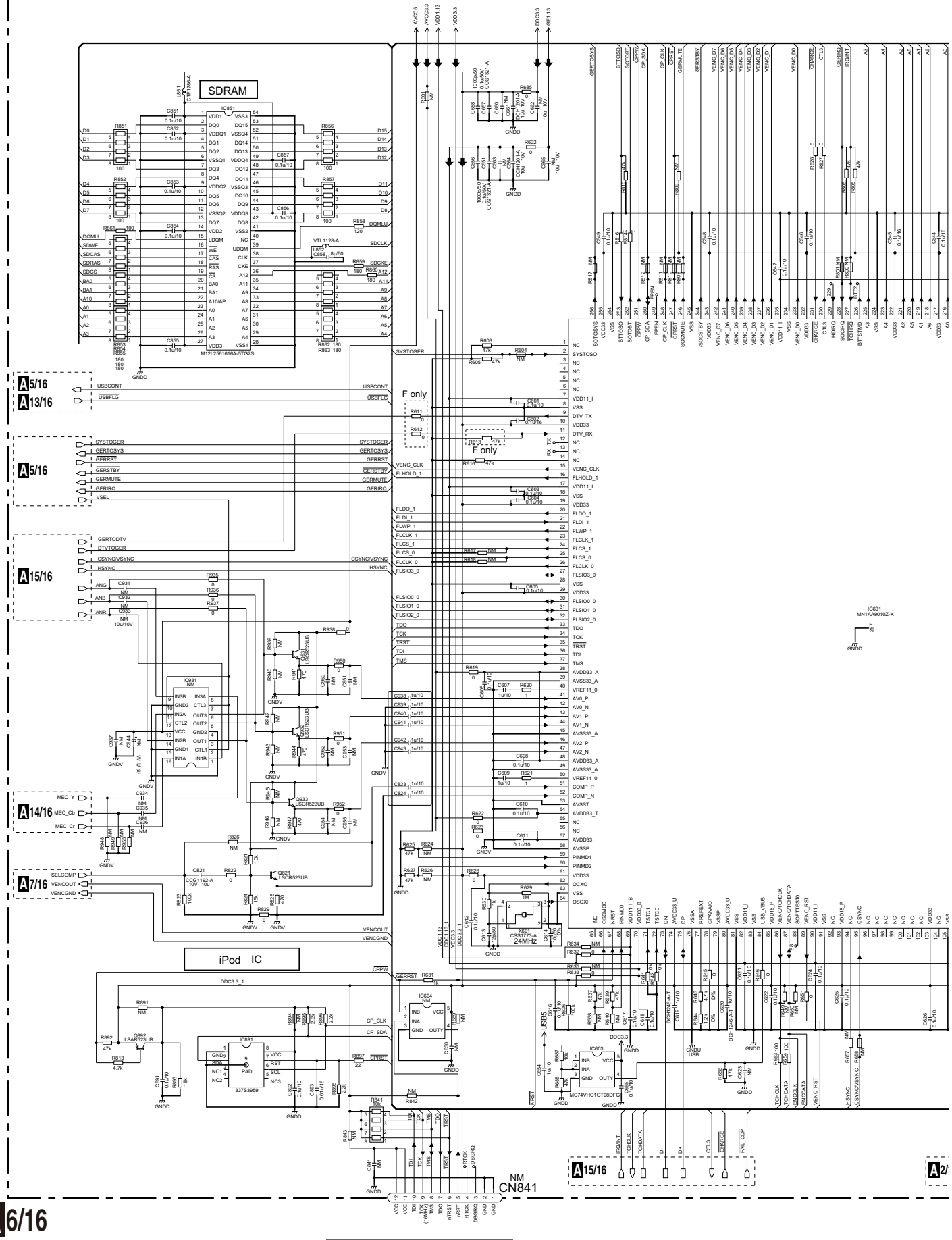

MODEL	
A	AVH-X7700BT/XNUC
B	AVH-X7700BT/XNEW5
C	AVH-X7700BT/XNUW5
D	AVH-X7750BT/XNRC
E	AVH-X7750BT/XNRD
F	AVH-X7750TV/XNRD
G	AVH-X7750BT/XNRI

Back up FLASH

Program FLASH

VIDEO ENCORDER

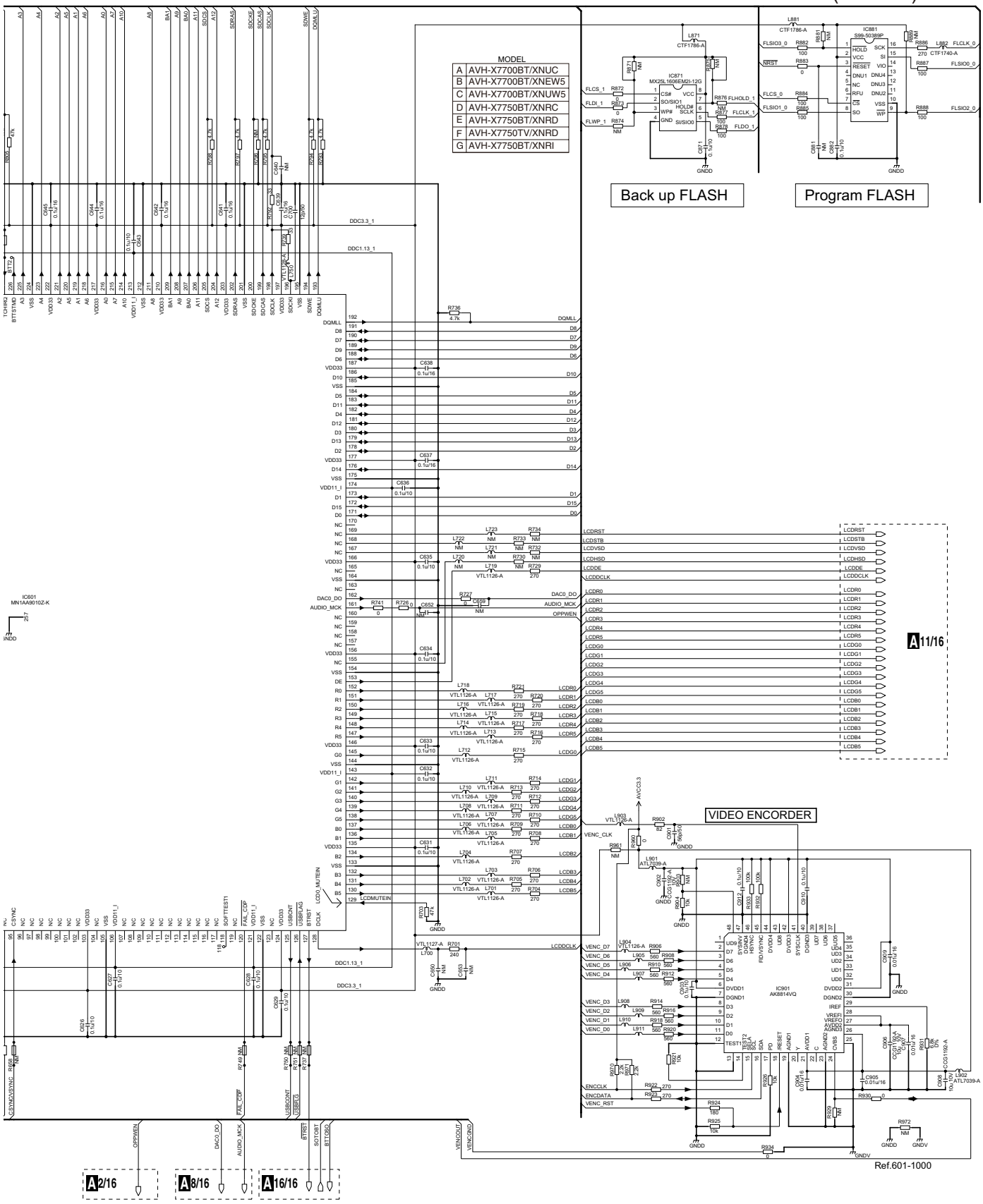

10.7 MOTHER UNIT (AVSEL)

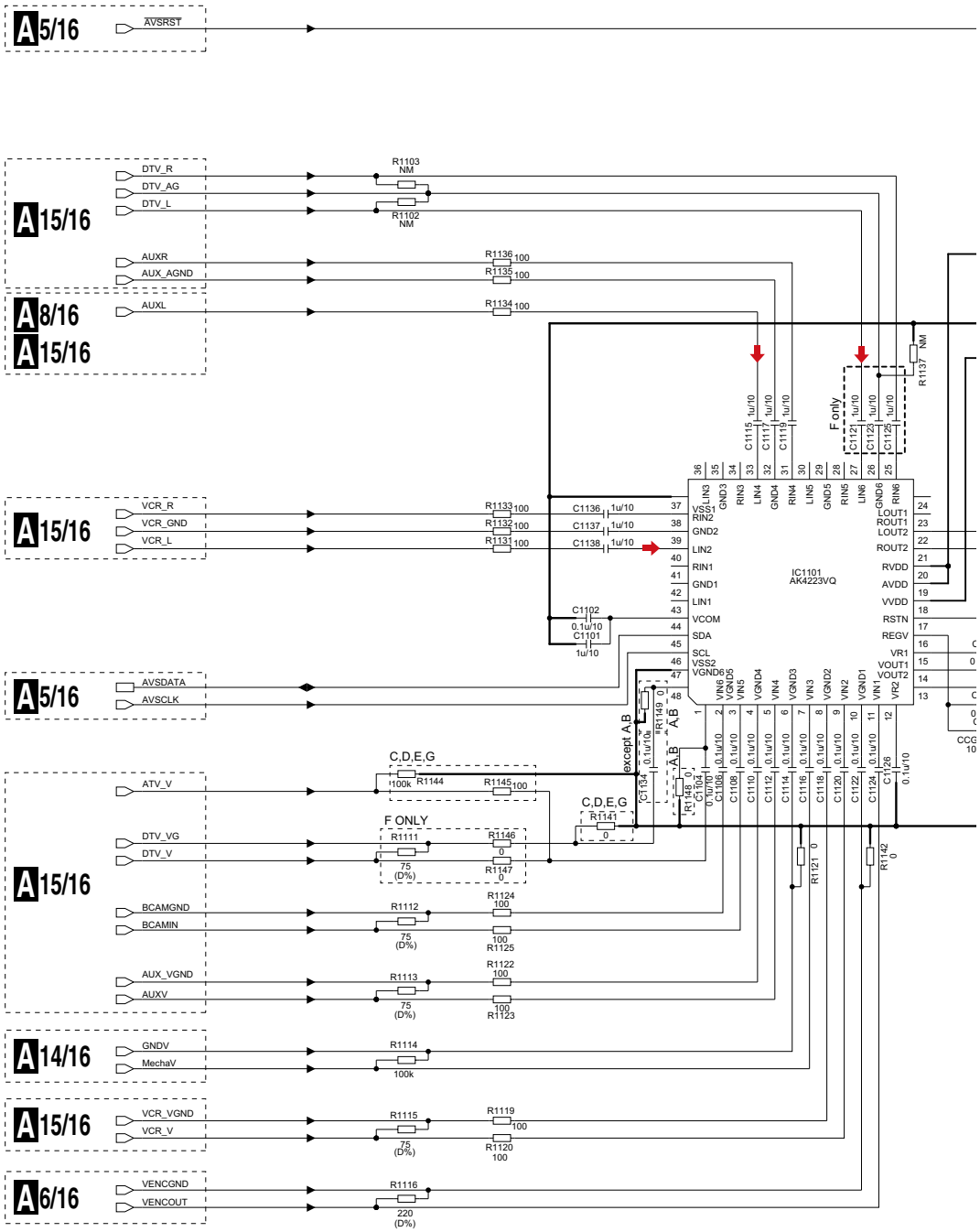

MODEL	
A	AVH-X7700BT/XNUC
B	AVH-X7700BT/XNEW5
C	AVH-X7700BT/XNUW5
D	AVH-X7750BT/XNRC
E	AVH-X7750BT/XNRD
F	AVH-X7750TV/XNRD
G	AVH-X7750BT/XNRI

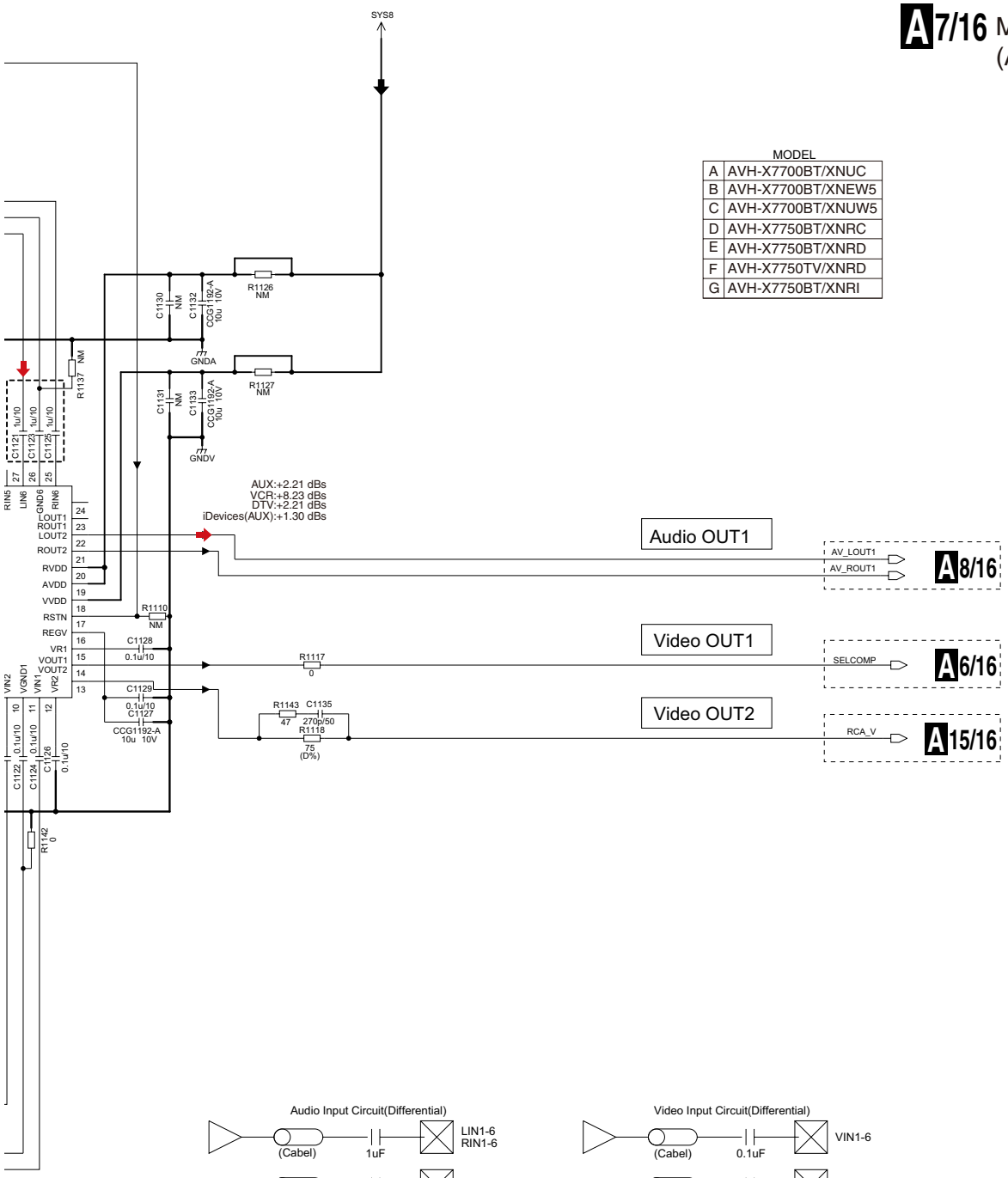

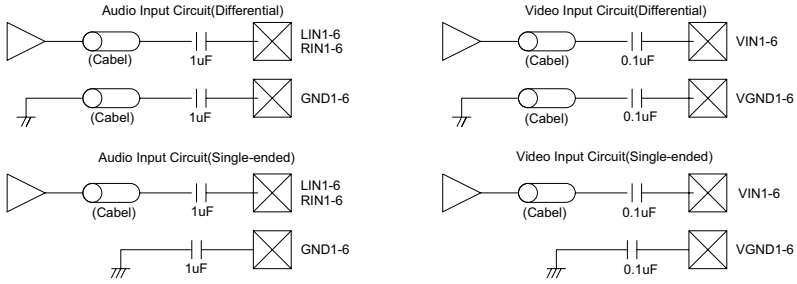

Ref.1101-1150

10.8 MOTHER UNIT (OPAL)

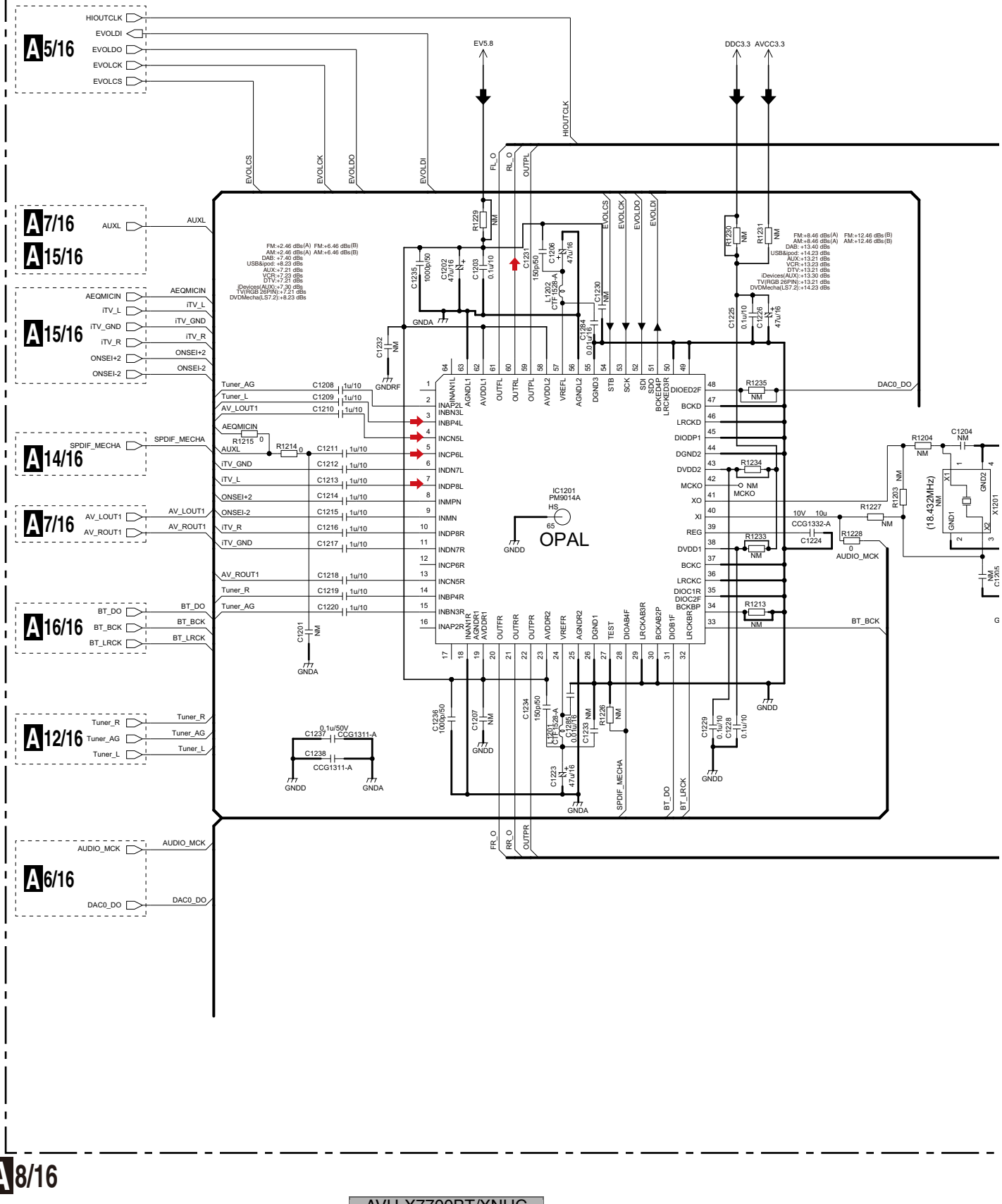

MODEL	
A	AVH-X2700BS/XNUC
B	AVH-X2700BT/XNEW5
C	AVH-X2700BT/XNUW5
D	AVH-X2750BT/XNRC
E	AVH-X2750BT/XNRD
F	AVH-X2750BT/XNRI
G	AVH-X2790BT/XNID

HIOUT AMP

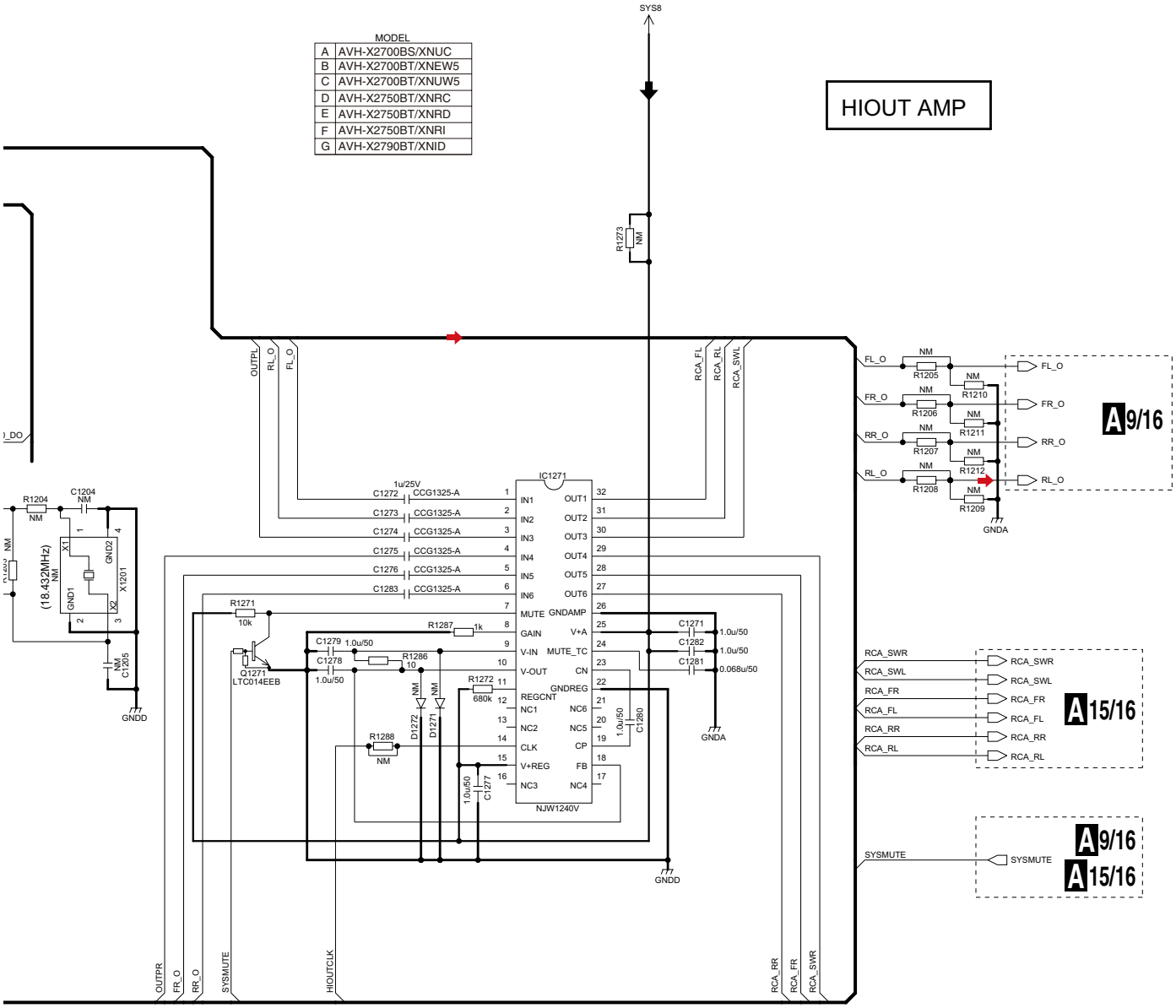

Ref.1201-1300
Ref.1201-1270
HIOUTAMP
Ref.1271-1300

10.9 MOTHER UNIT (PWR-IC)

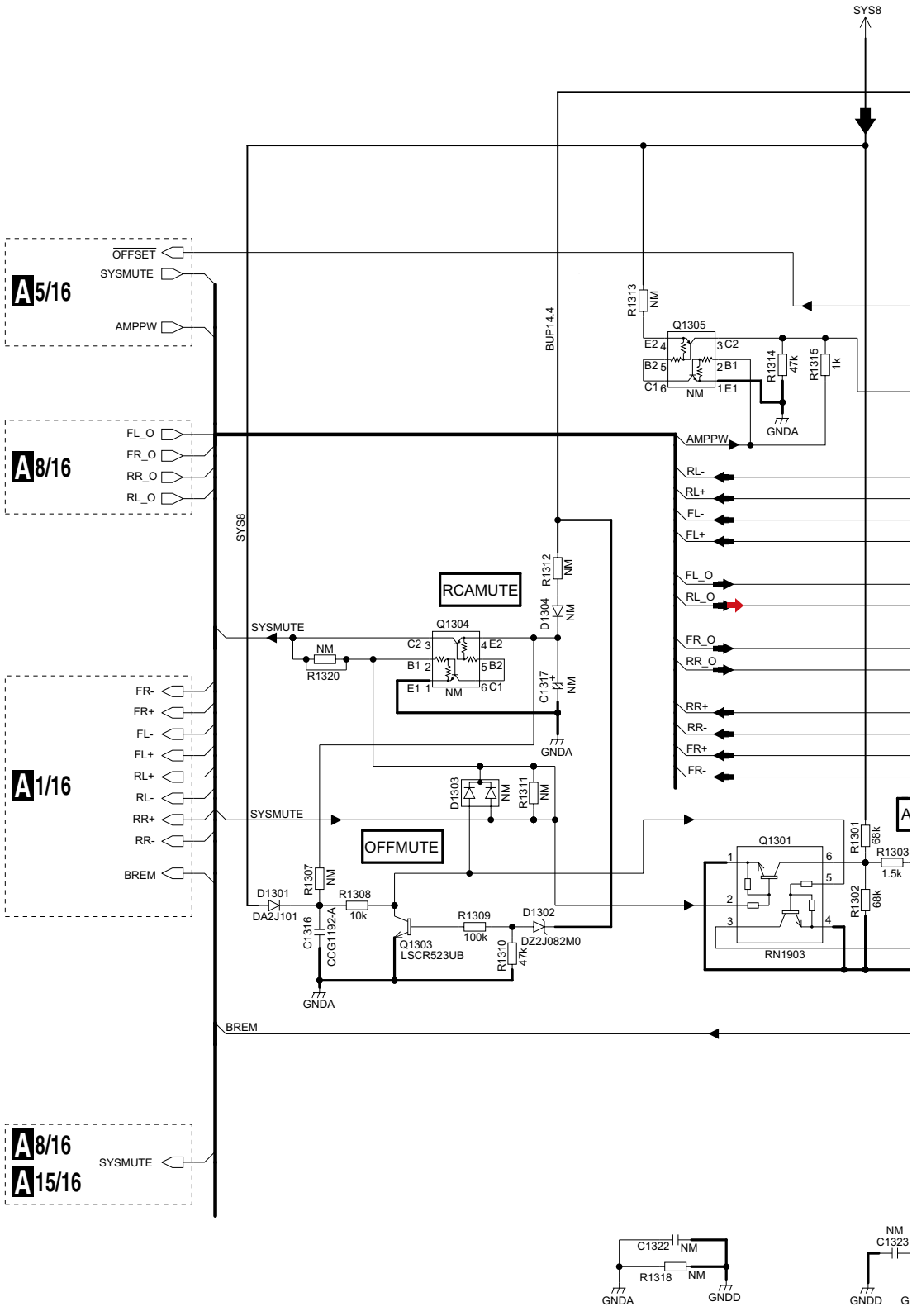

A9/16

A9/16 MOTHER UNIT (PWR IC)

MODEL	
A	AVH-X2700BS/XNUC
B	AVH-X2700BT/XNEW5
C	AVH-X2700BT/XNUW5
D	AVH-X2750BT/XNRC
E	AVH-X2750BT/XNRD
F	AVH-X2750BT/XNRI
G	AVH-X2790BT/XNID

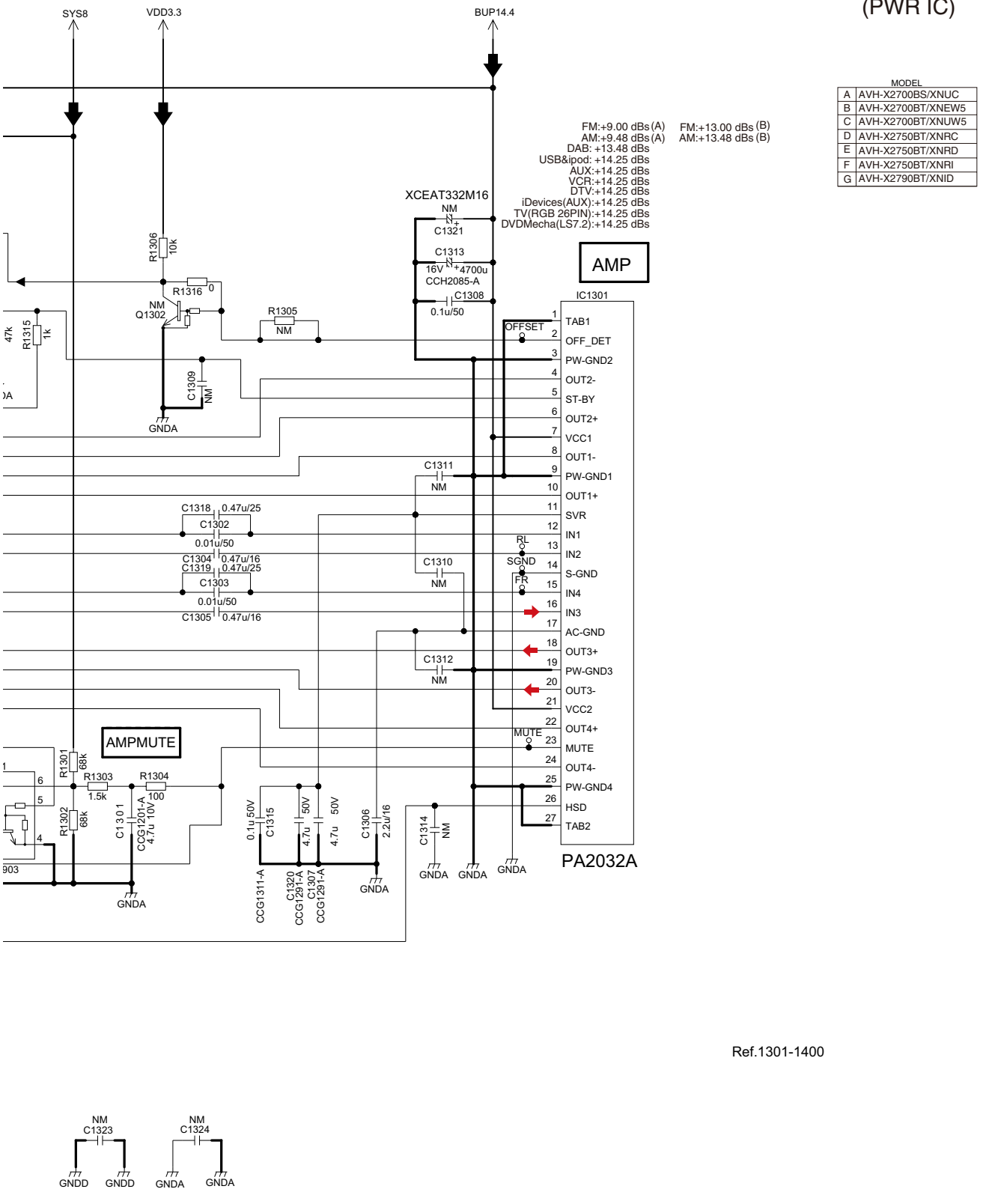

Ref.1301-1400

10.10 MOTHER UNIT (PWR TUN)

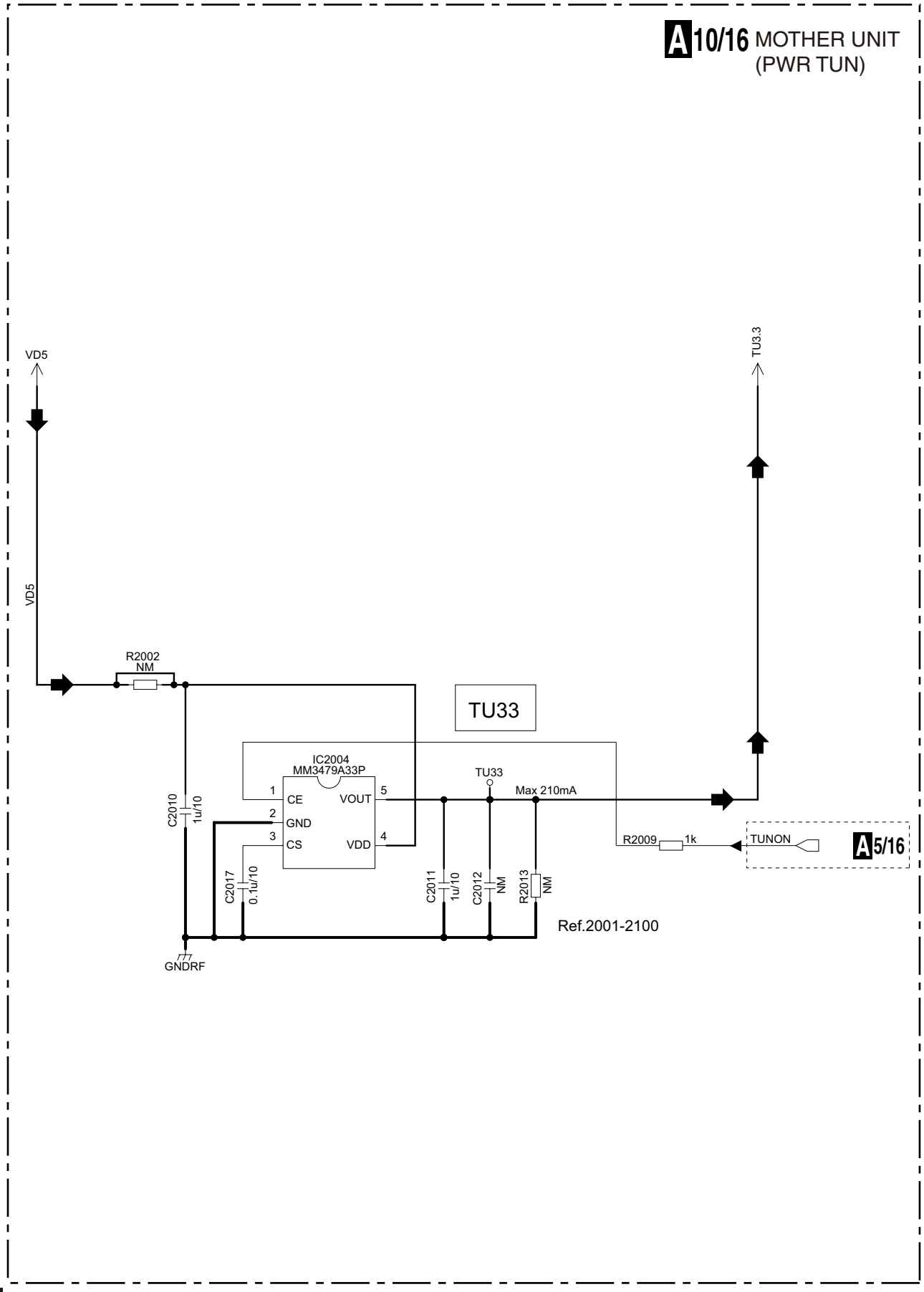

A10/16

10.11 MOTHER UNIT (LVDS TX)

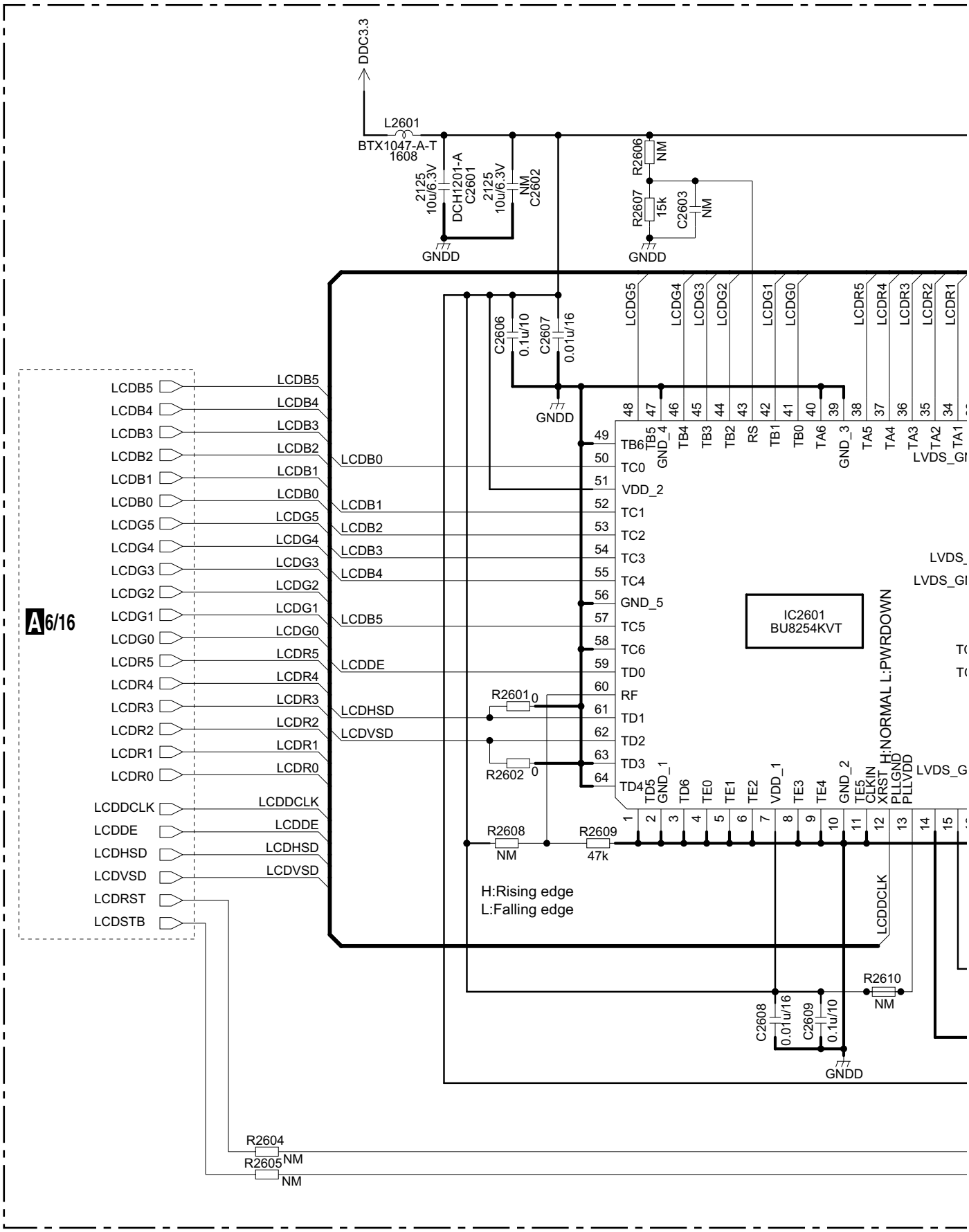

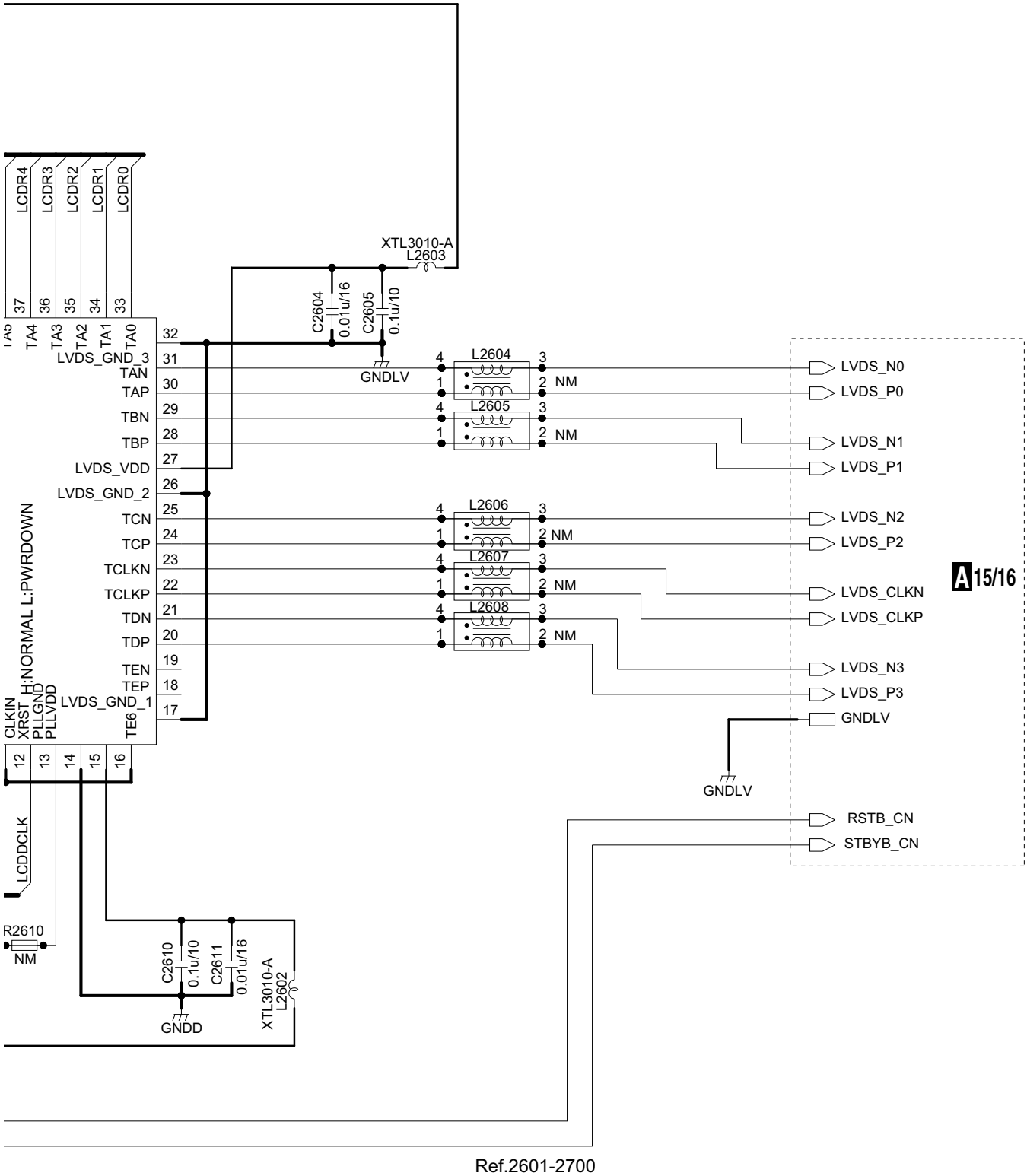

Ref.2601-2700

A11/16

10.12 MOTHER UNIT (LITHIO)

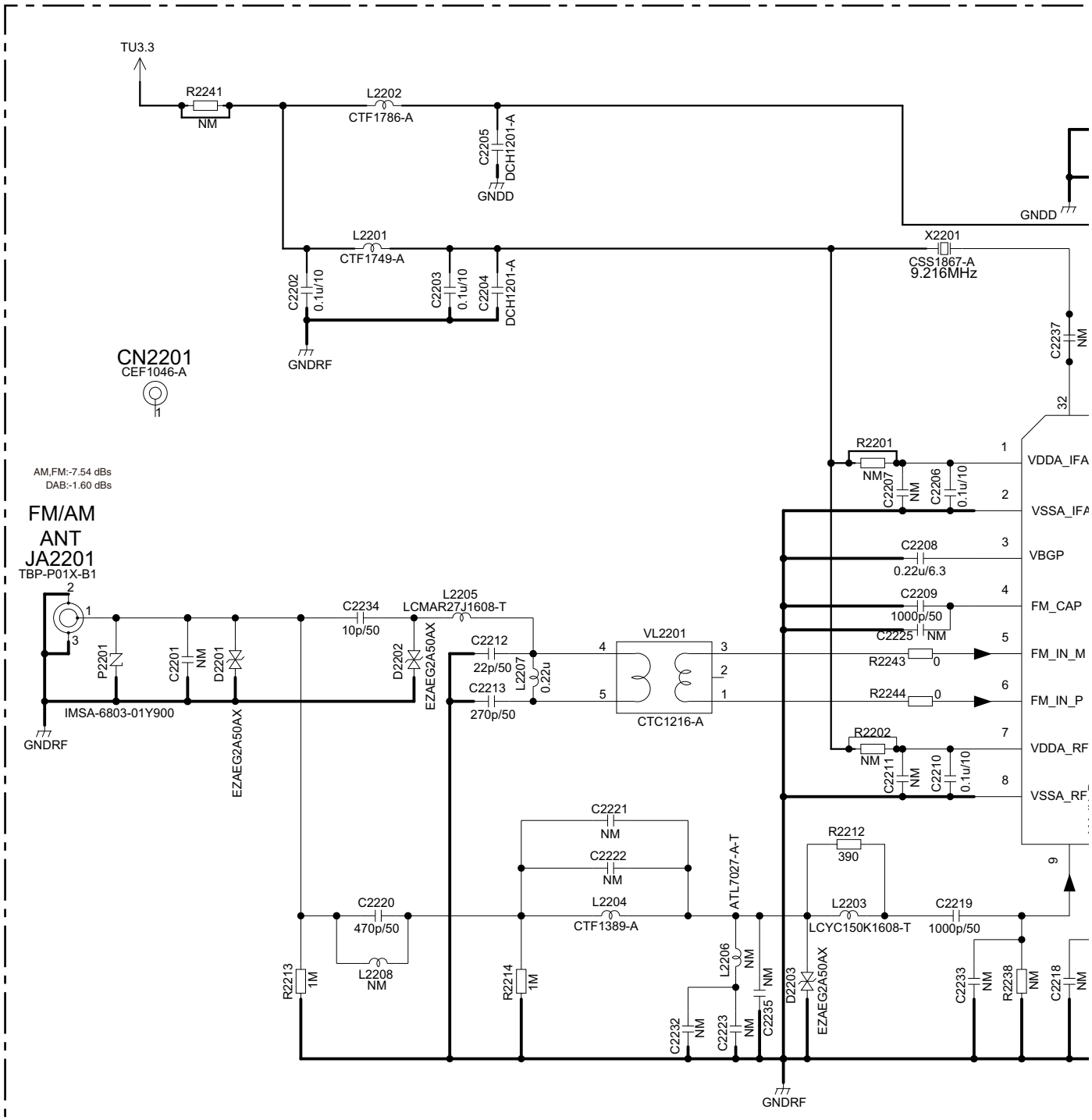

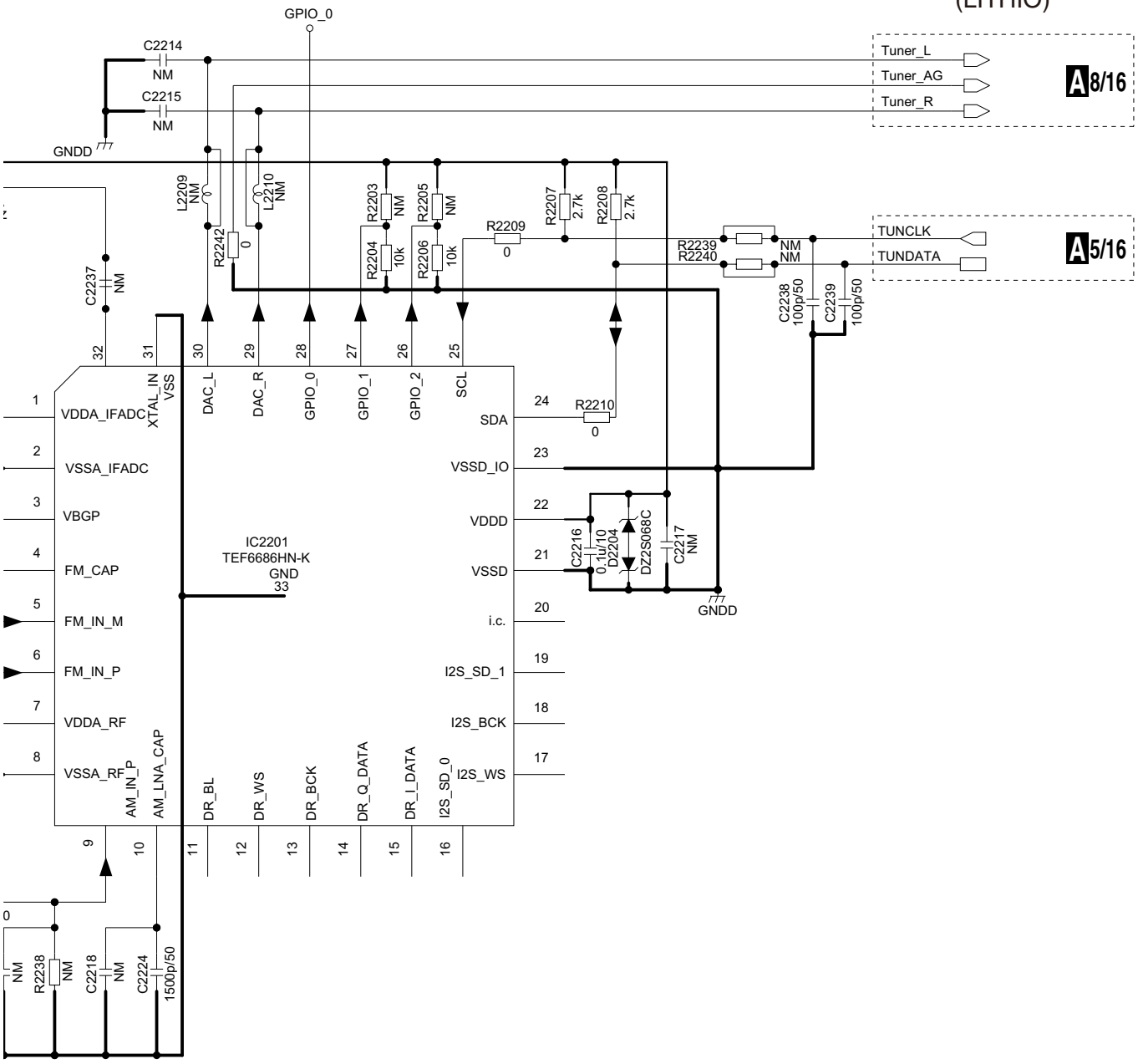

Ref.2201-2300

10.13 MOTHER UNIT (PWR USB)

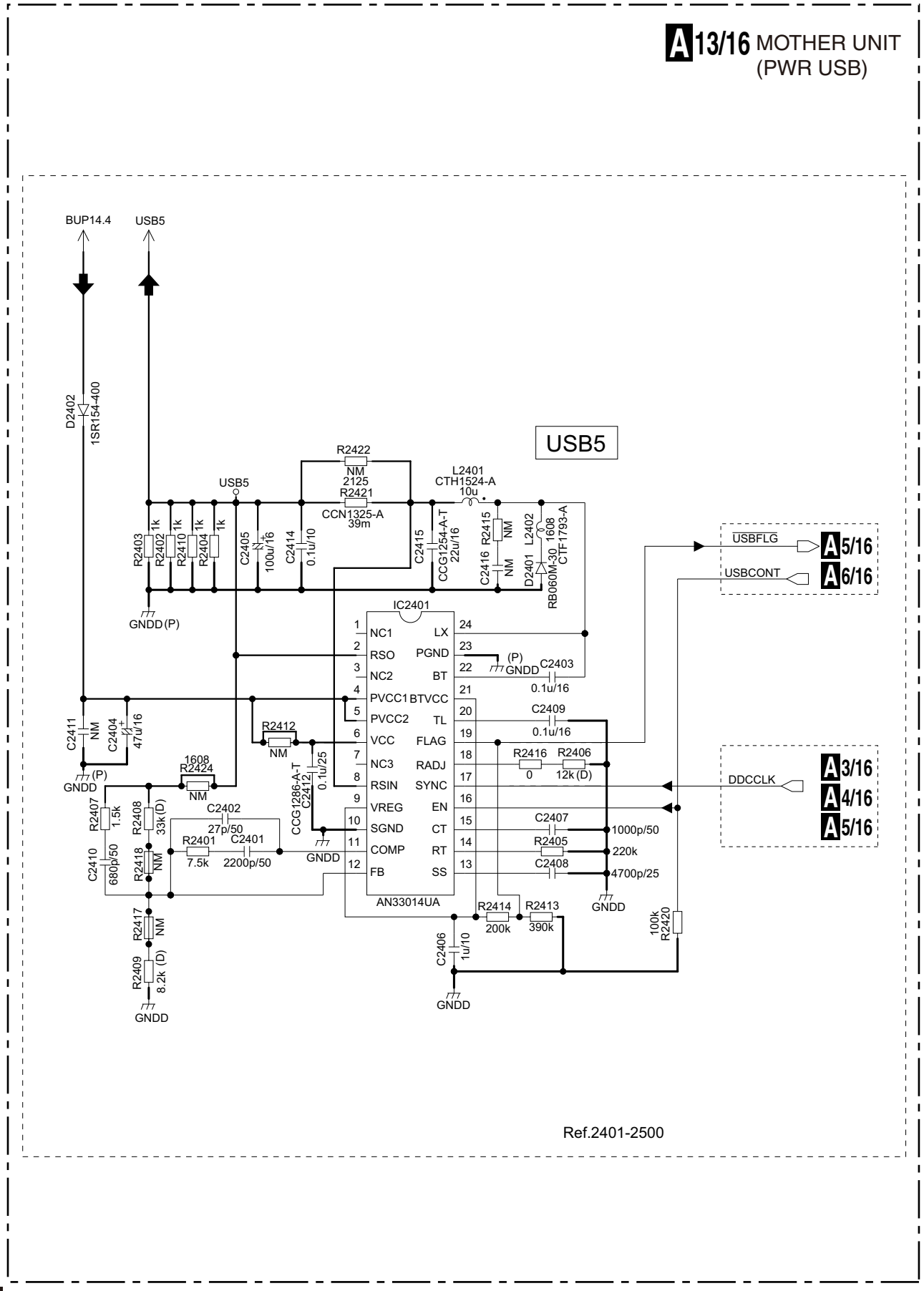

10.14 MOTHER UNIT (MS7.2 IF)

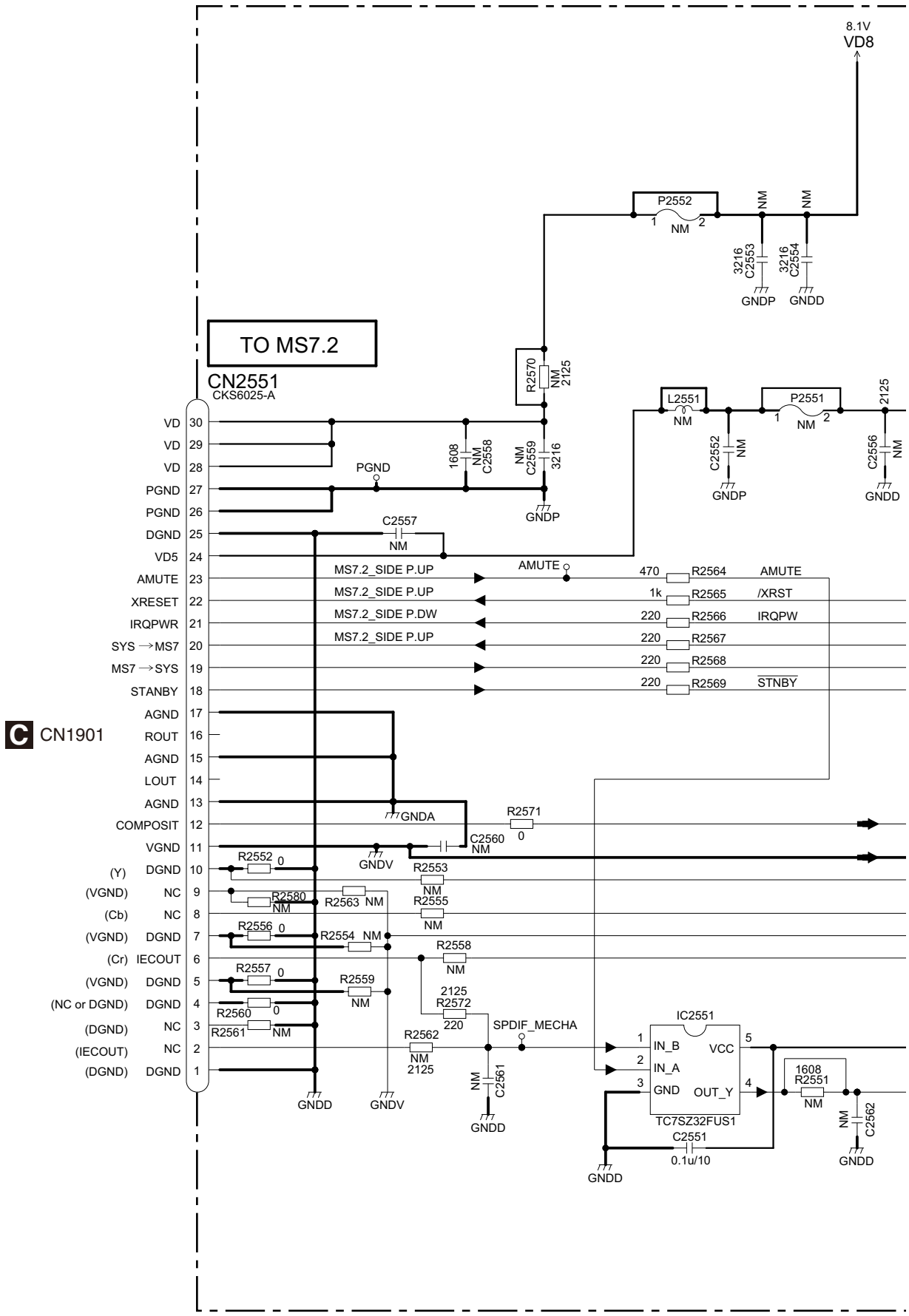

A14/16

A14/16 MOTHER UNIT (MS7.2 IF)

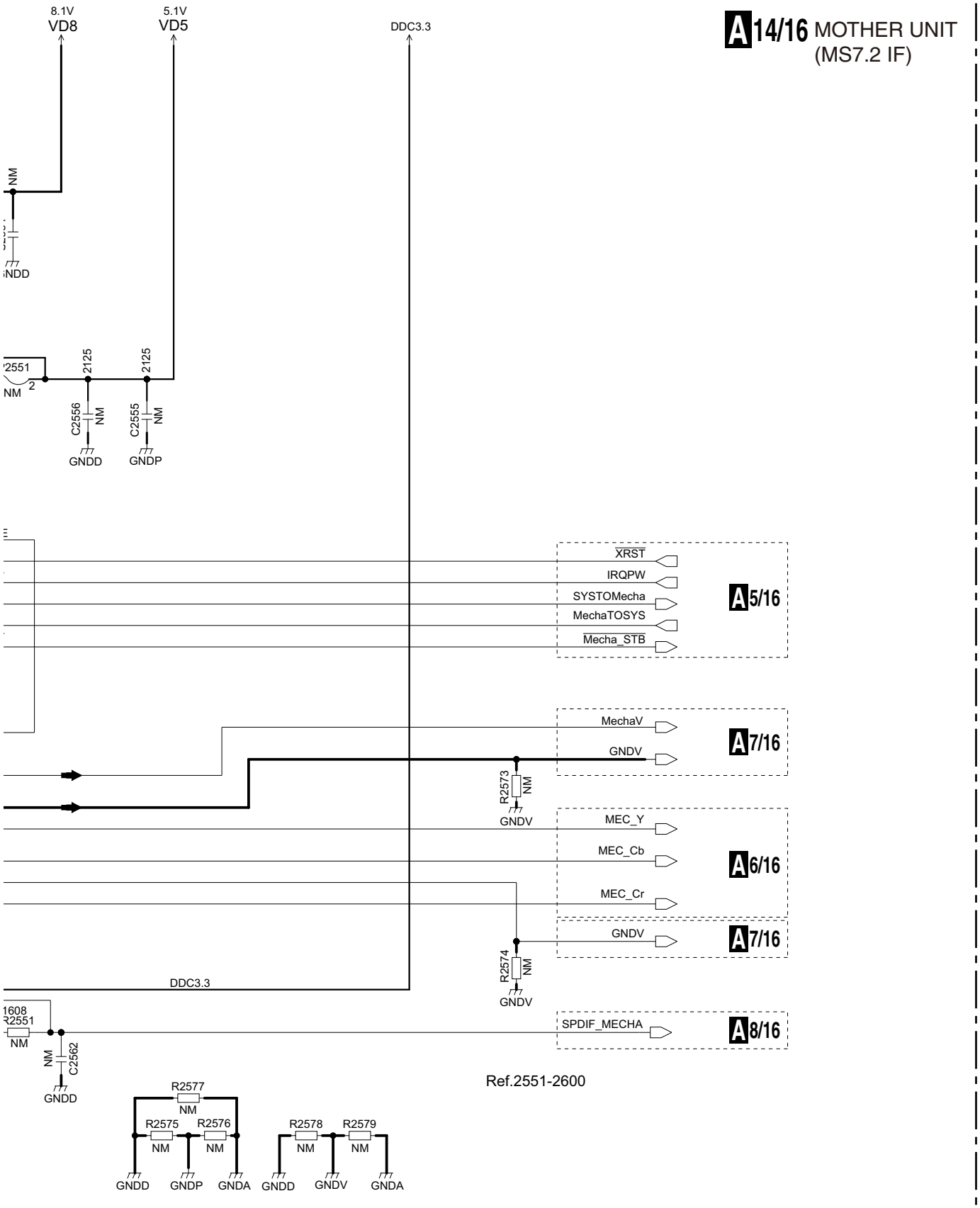

Ref.2551-2600

A14/16

10.15 MOTHER UNIT (EXT I/F) (1/2 scale)

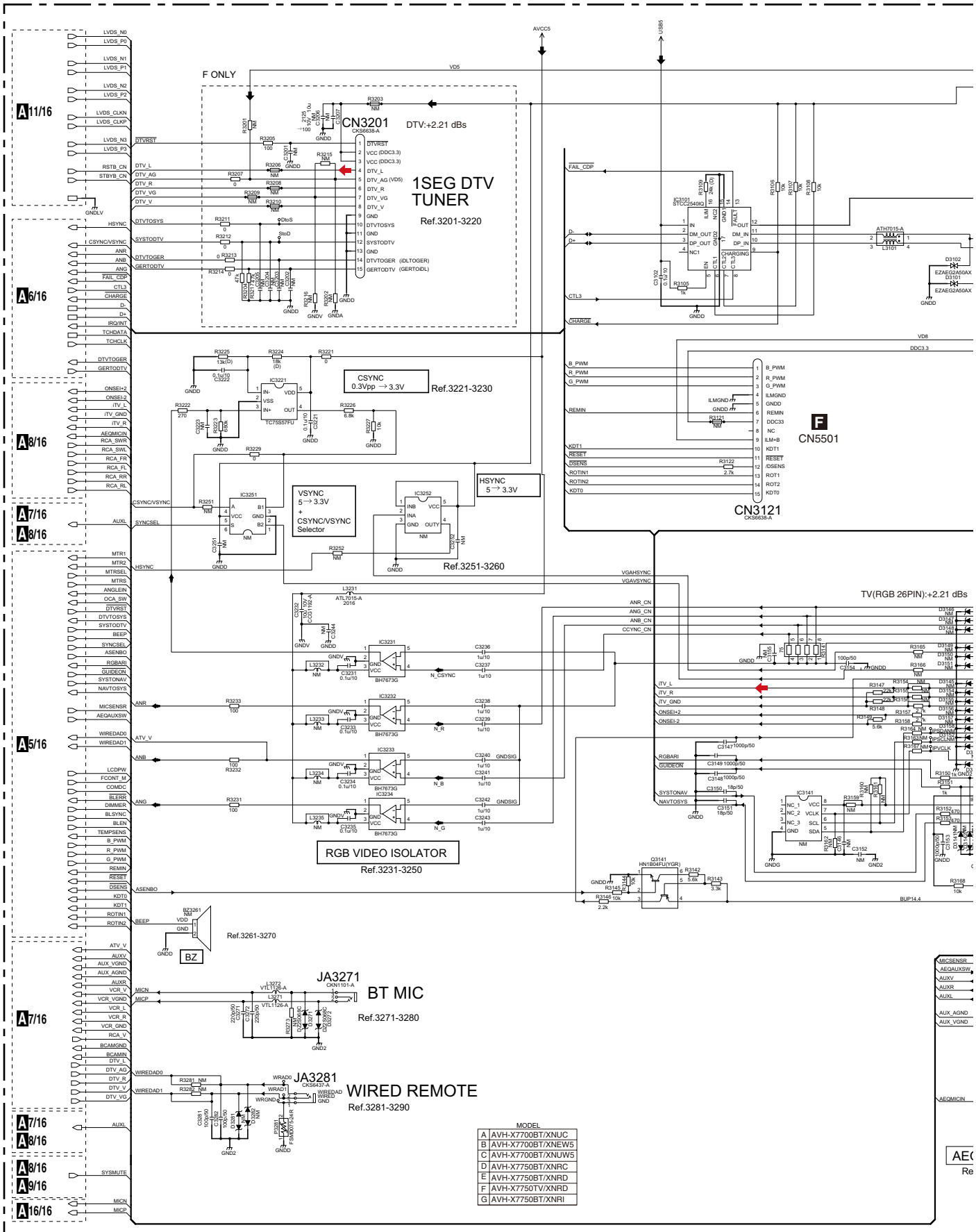

A15/16

A 15/16 MOTHER UNIT (EXT I/F)

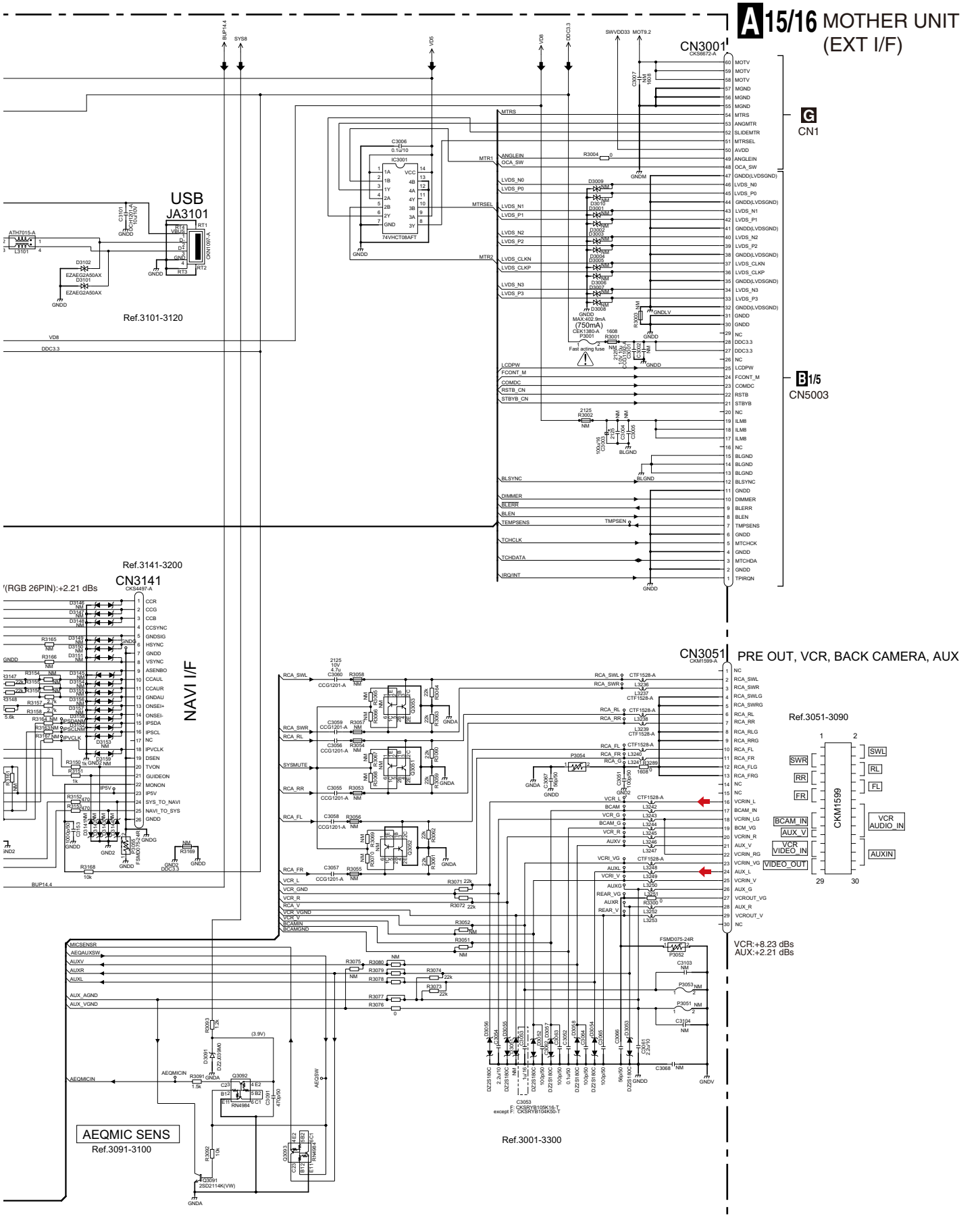

10.16 MOTHER UNIT (BT)

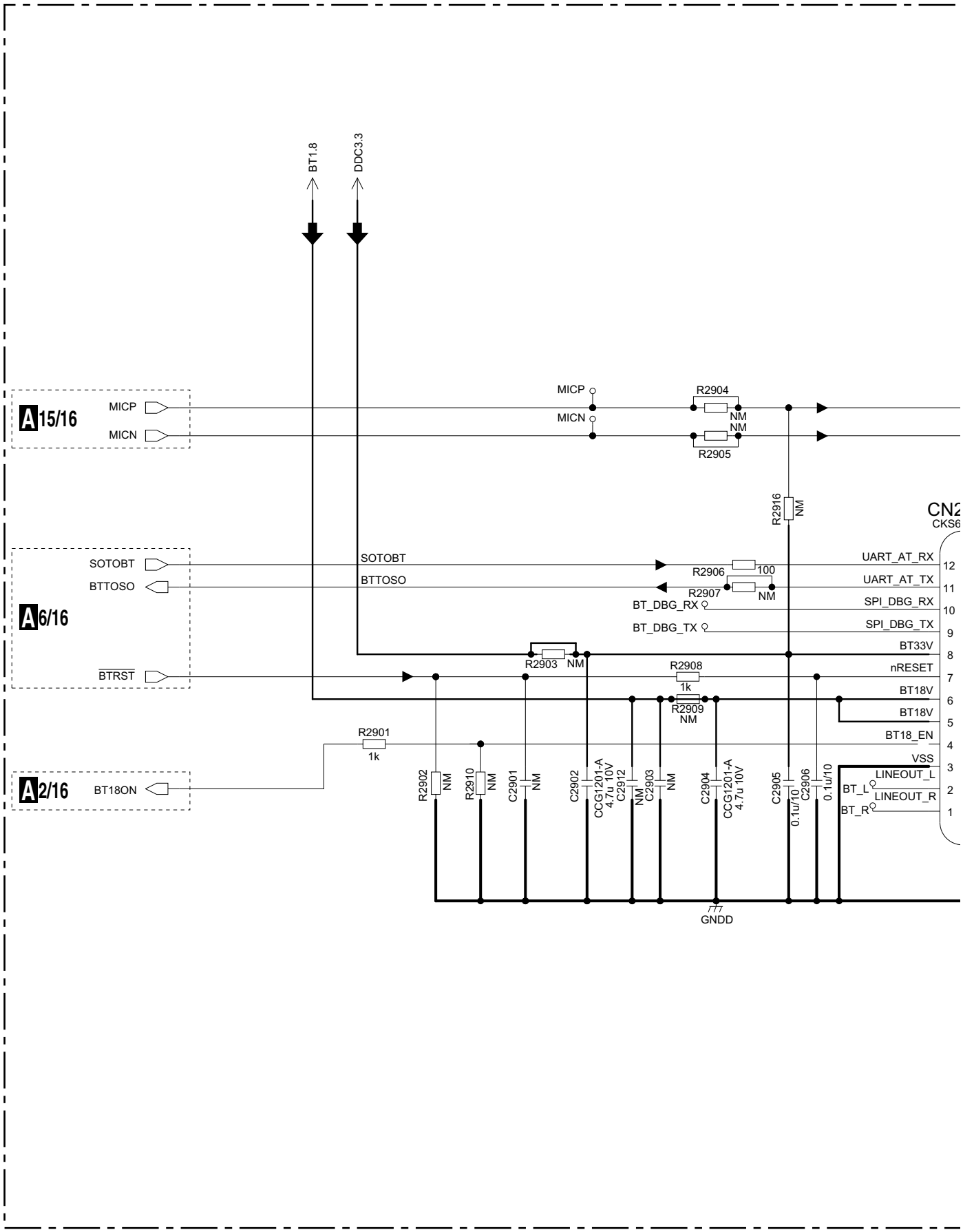

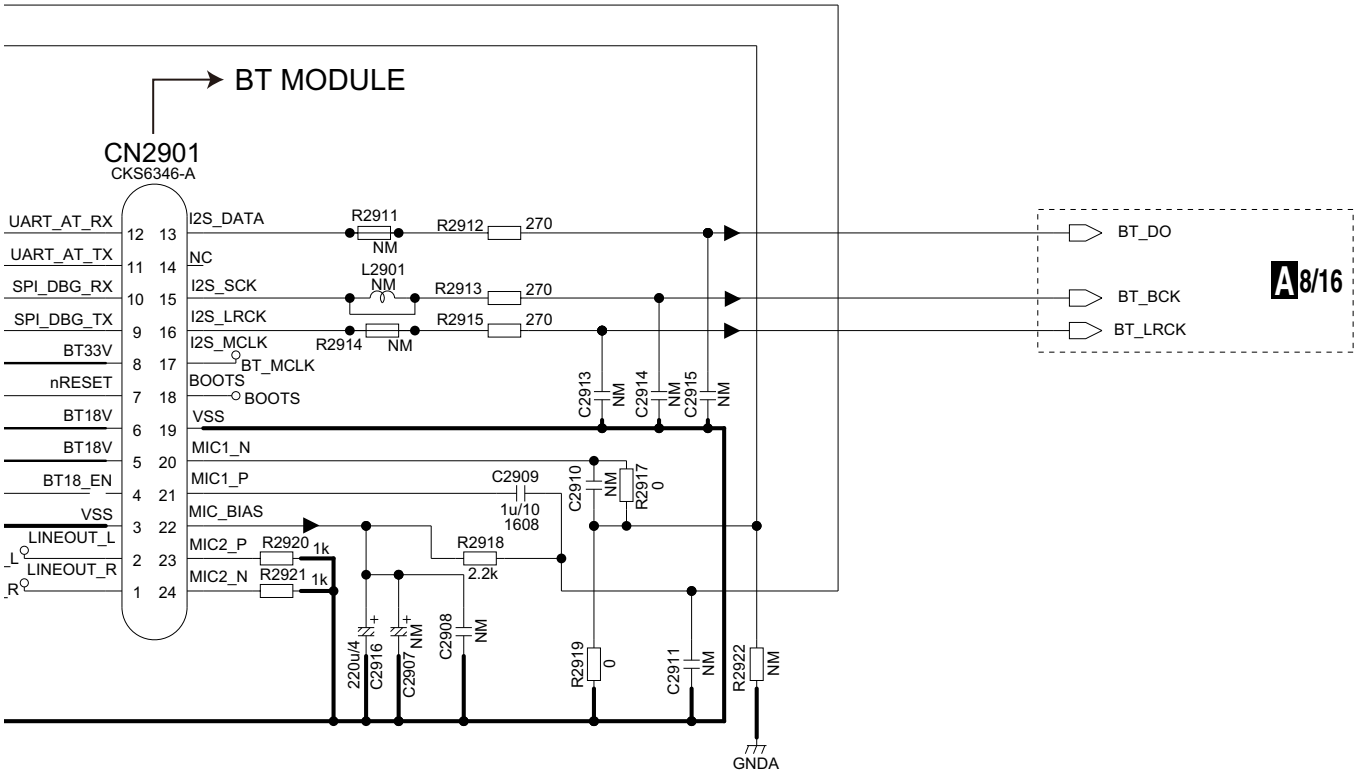

Ref.2901-3000

10.17 MONITOR UNIT (PCB I/F)

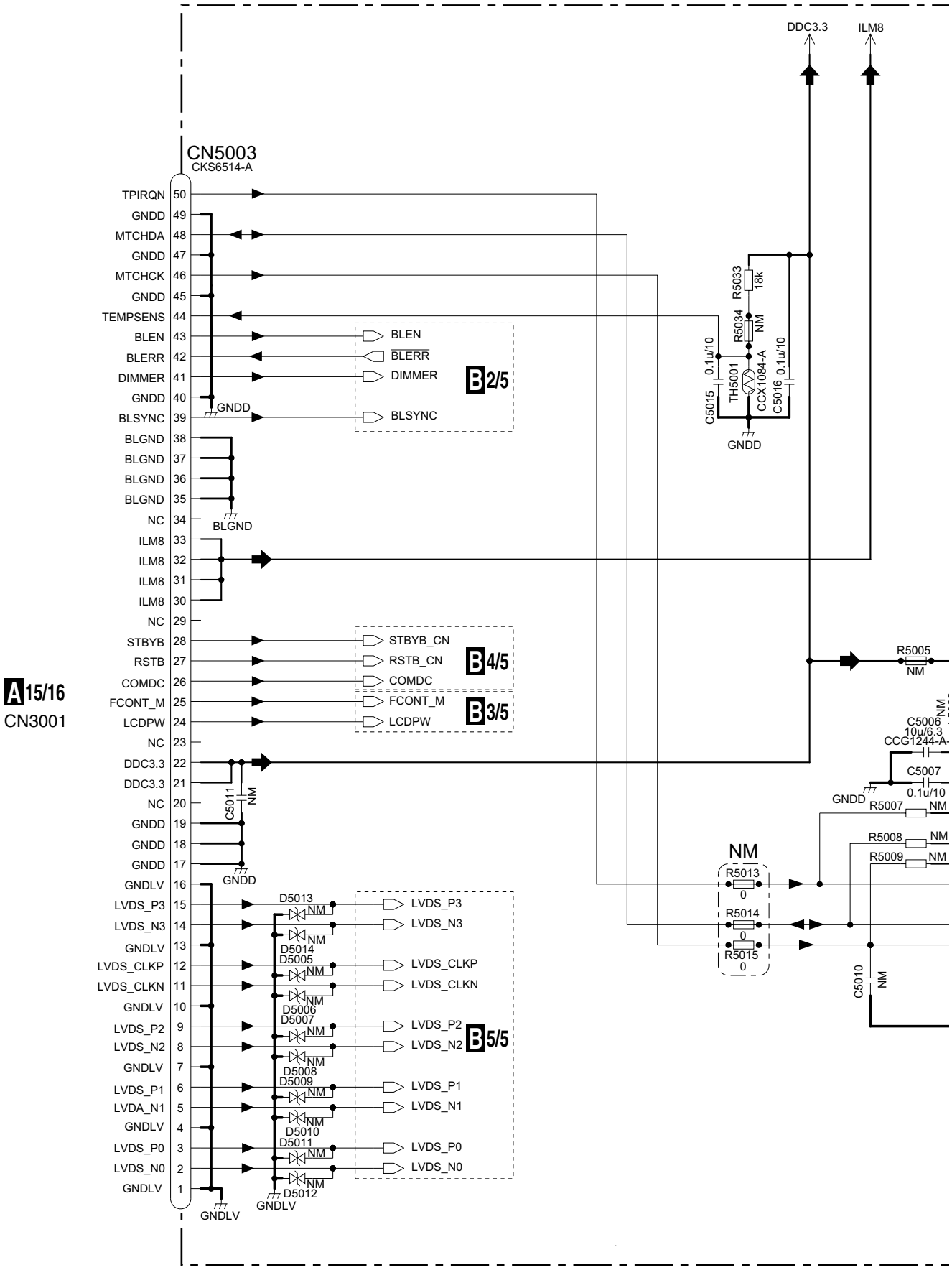

B1/5

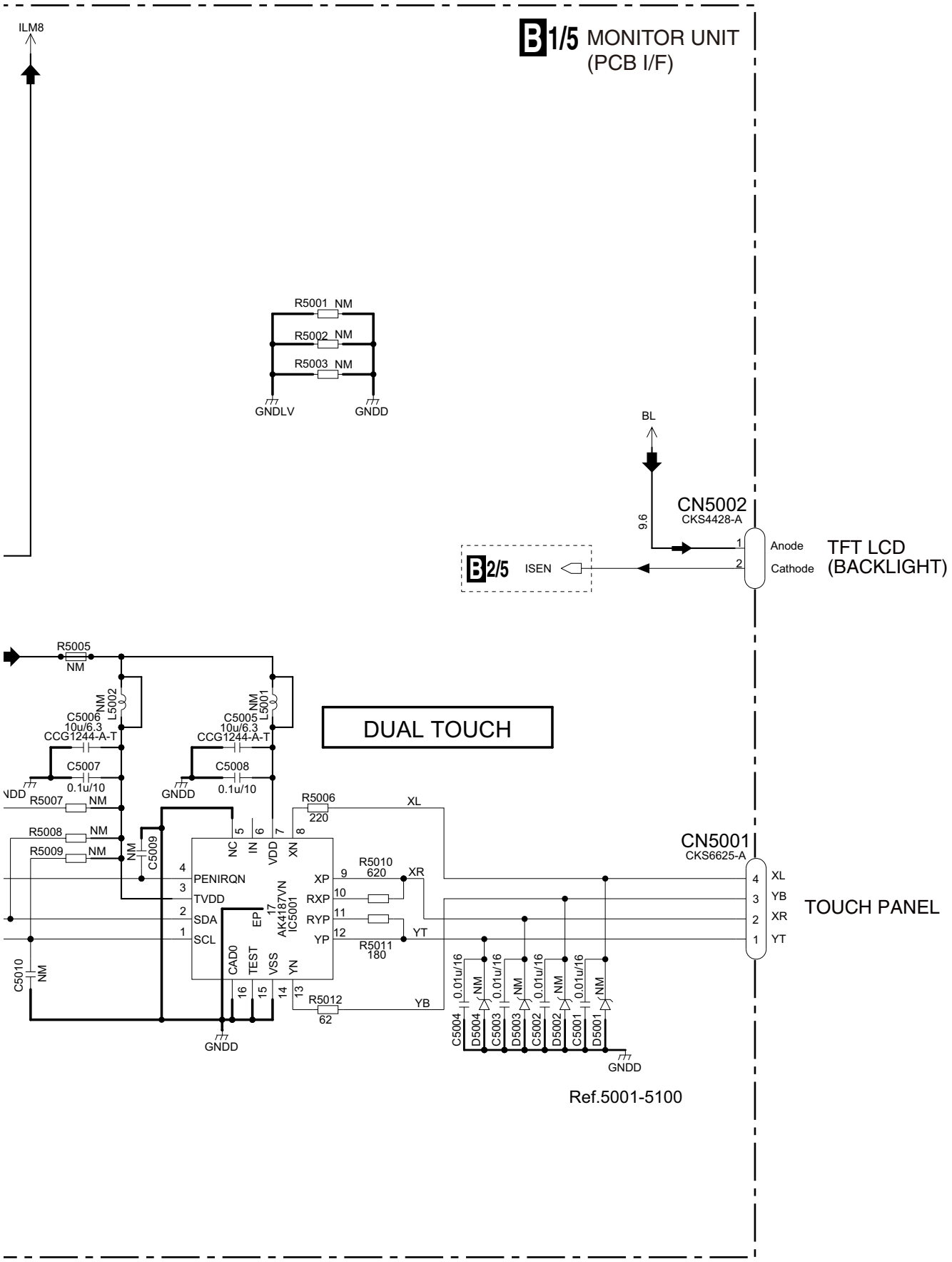
B1/5 MONITOR UNIT
(PCB I/F)
ILM8
R5001 NM
R5002 NM
R5003 NM
GNDLV
GNDD
BL
9.6
CN5002
CKS4428-A
1 Anode
2 Cathode
TFT LCD
(BACKLIGHT)
B2/5 ISEN
R5005 NM
C5006 10u/6.3 CCG1244-A-T
C5005 10u/6.3 CCG1244-A-T
L5002 NM
L5001 NM
C5007 0.1u/10
C5008 0.1u/10
R5007 NM
R5008 NM
R5009 NM
C5009 NM
C5010 NM
DUAL TOUCH
R5006 220
XL
R5010 620
XR
R5011 180
YT
R5012 62
YB
NC IN VDD XN
PENIRQN TVDD SDA SCL
XP RXP RYP YP
EP
AK4187VN
IC5001
CAD0 TEST VSS YN
CN5001
CKS6625-A
4 XL
3 YB
2 XR
1 YT
TOUCH PANEL
C5004 0.01u/16 NM D5004
C5003 0.01u/16 NM D5003
C5002 0.01u/16 NM D5002
C5001 0.01u/16 NM D5001
Ref.5001-5100

10.18 MONITOR UNIT (S LCD BL)

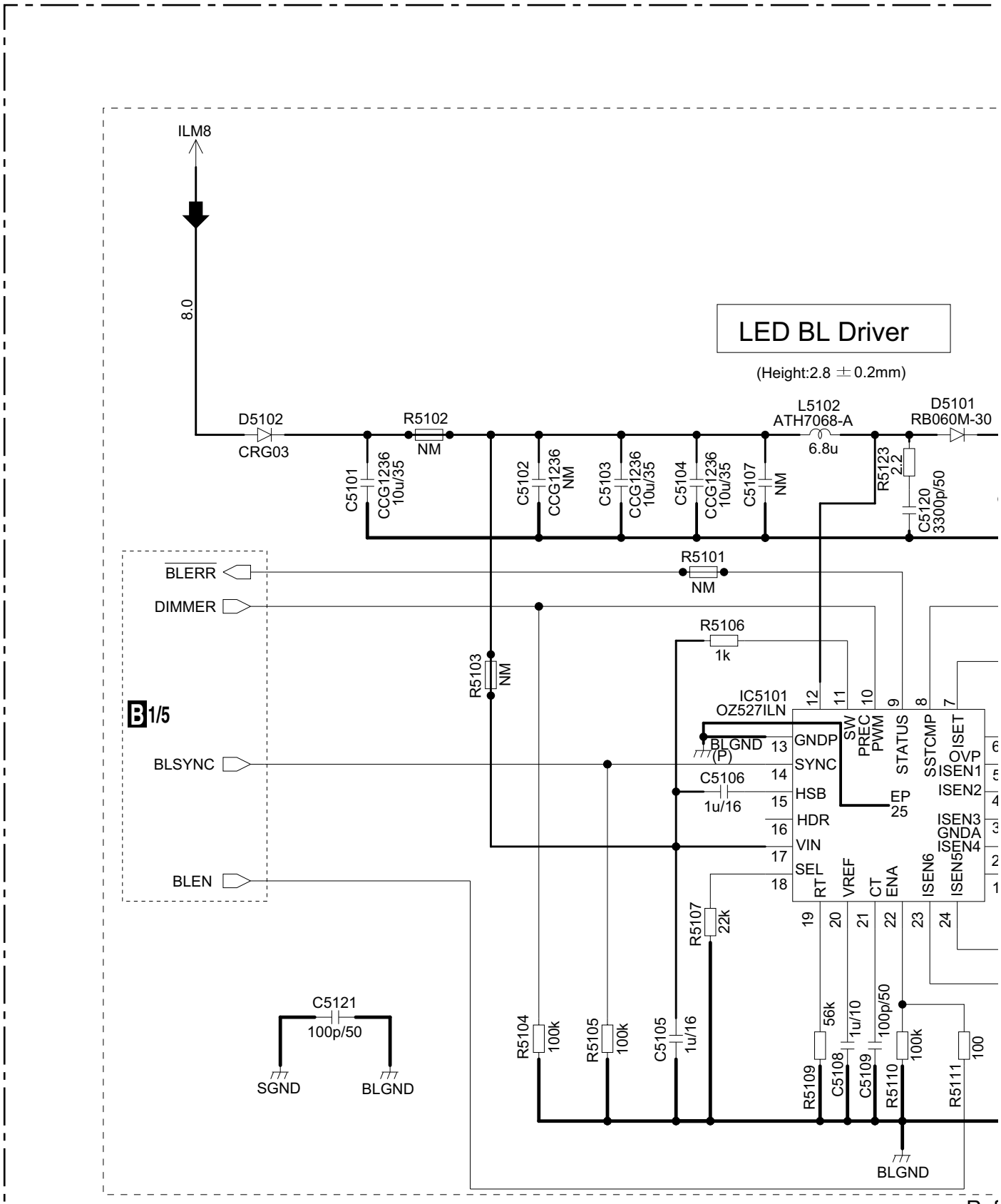

B 2/5

B2/5 MONITOR UNIT (S LCD BL)

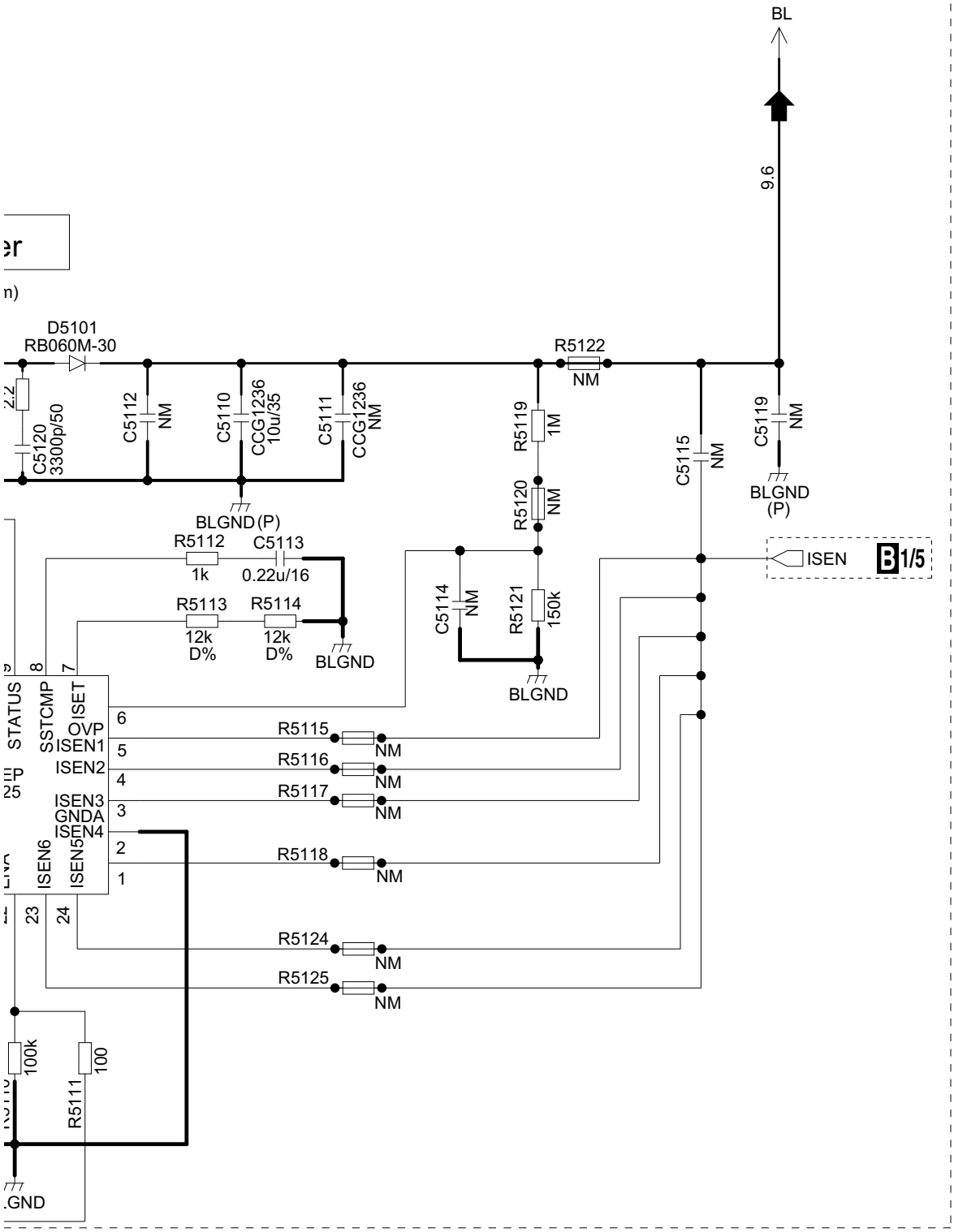

B2/5

10.19 MONITOR UNIT (S LCD PW)

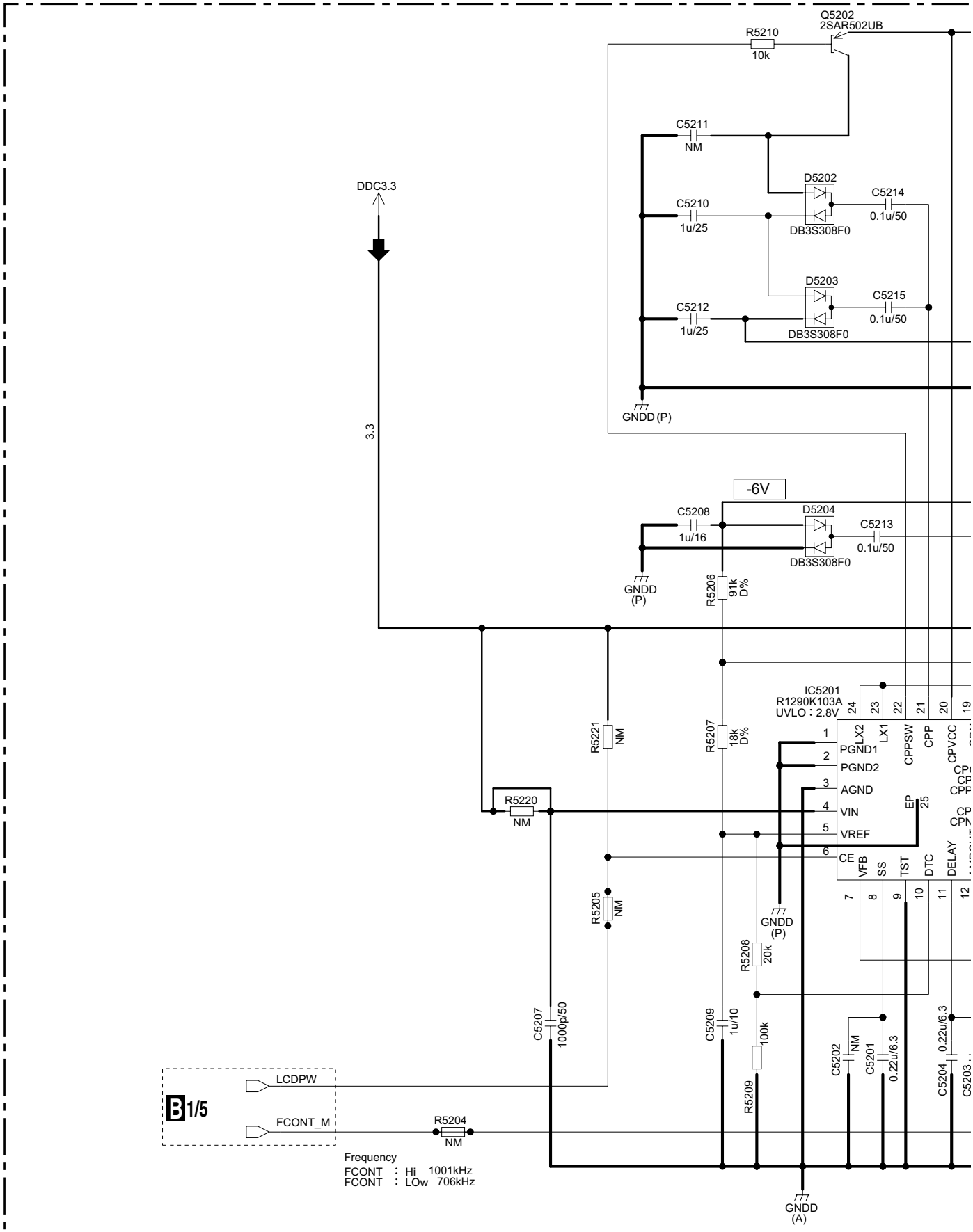

B3/5 MONITOR UNIT (S LCD PW)

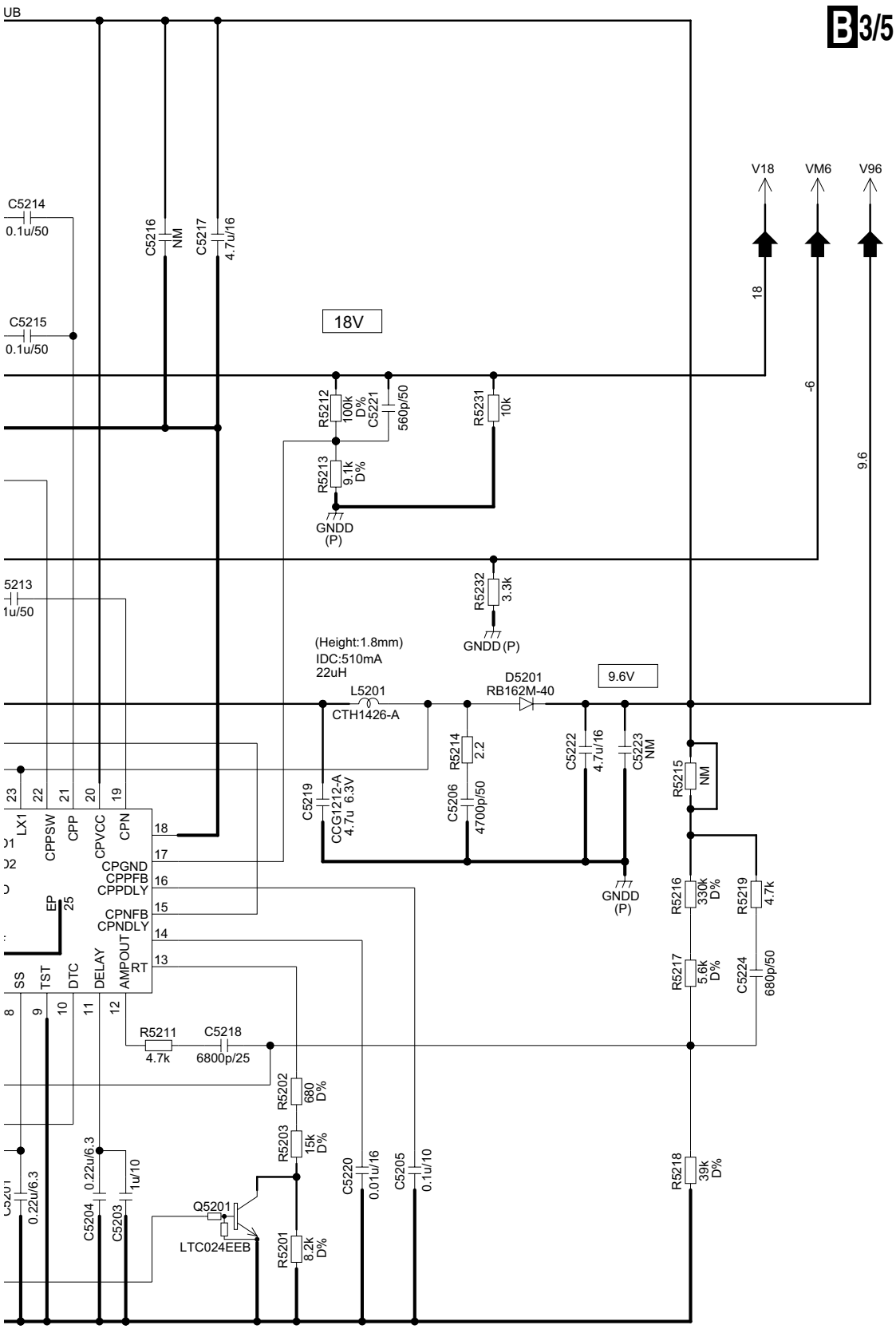

Ref.5201-5300

10.20 MONITOR UNIT (LCD I/F)

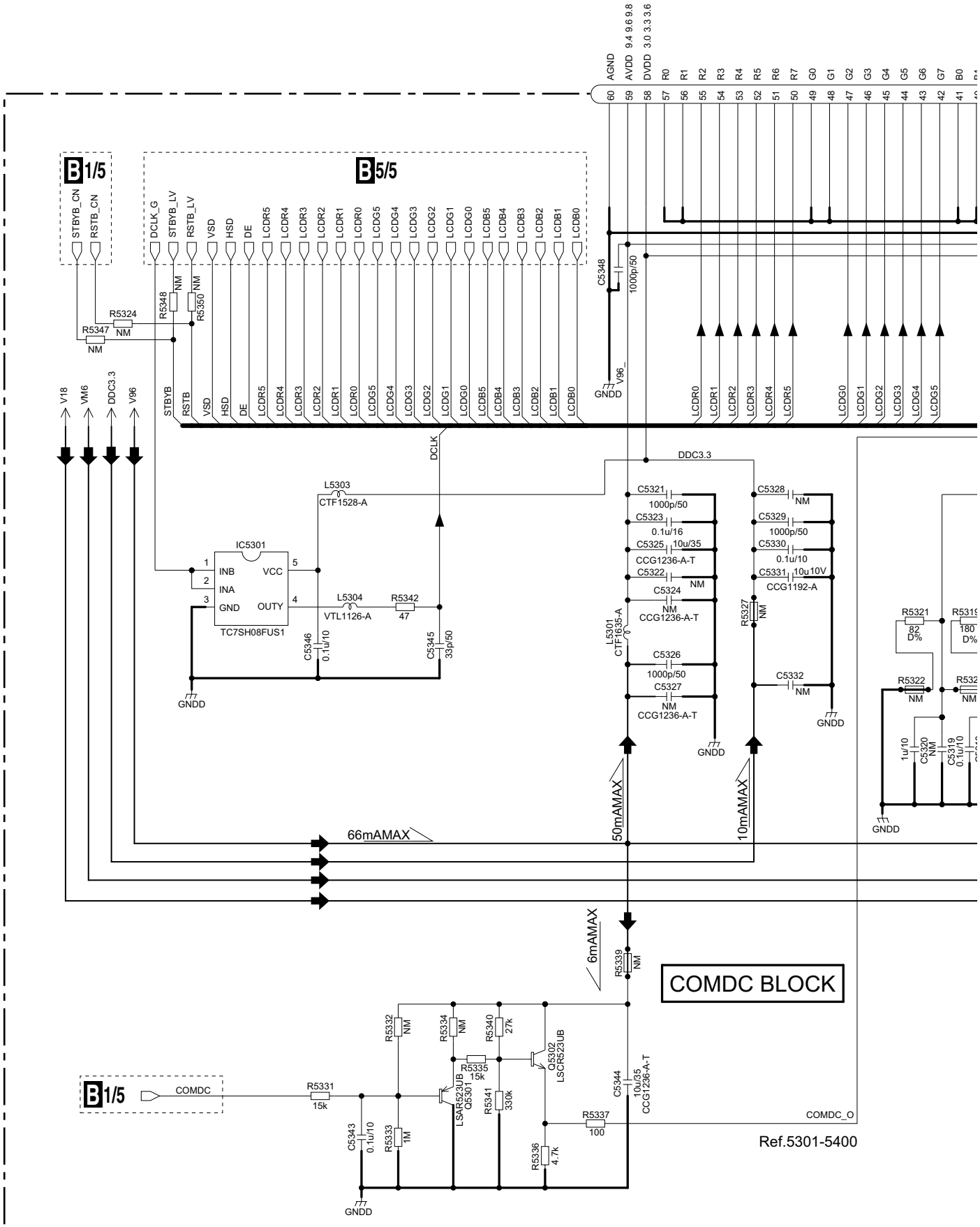

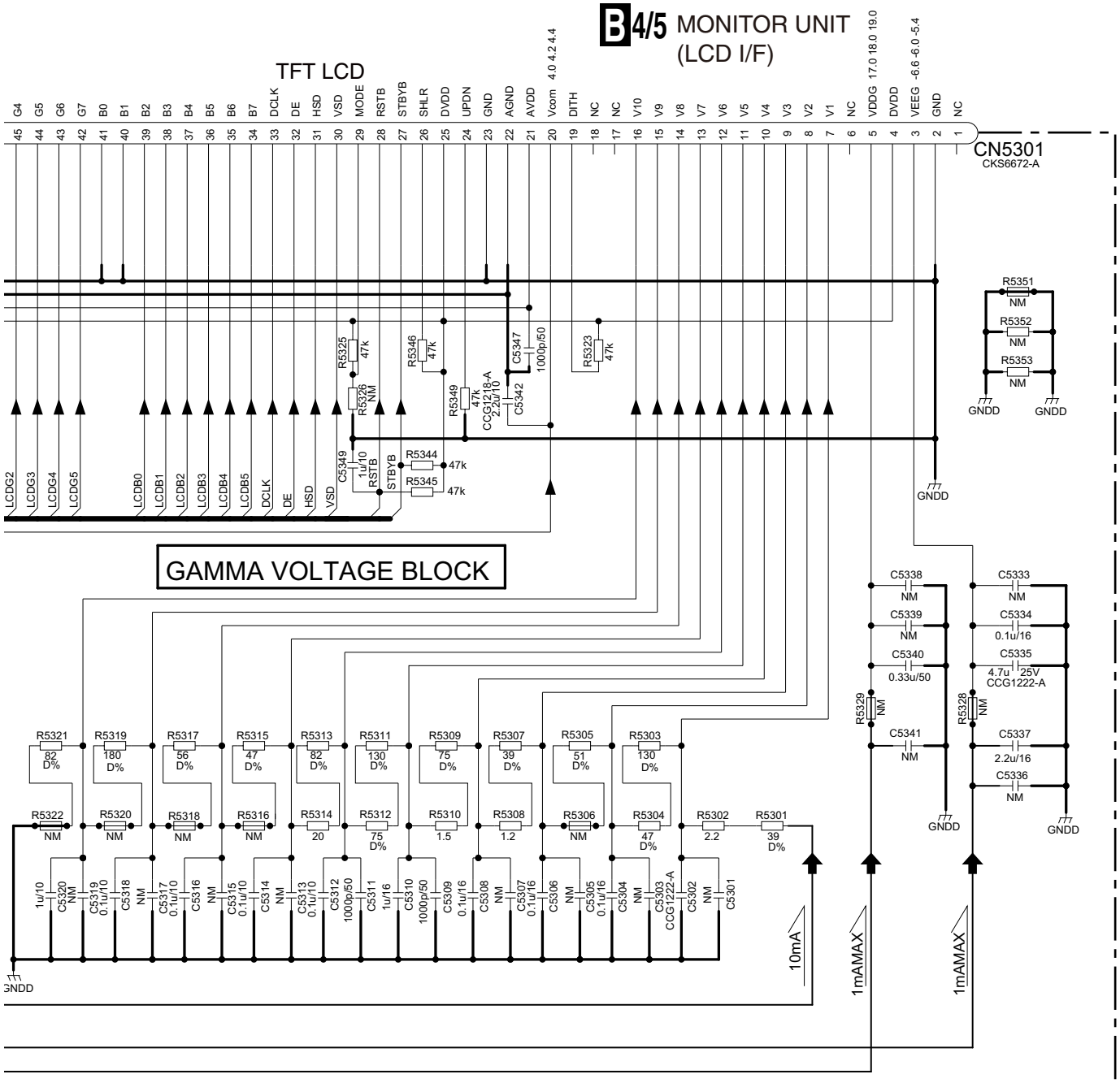
TFT LCD
CN5301
CKS6672-A
GAMMA VOLTAGE BLOCK
GNDD
10mA
1mAMAX
1mAMAX

10.21 MONITOR UNIT (LVDC RX)

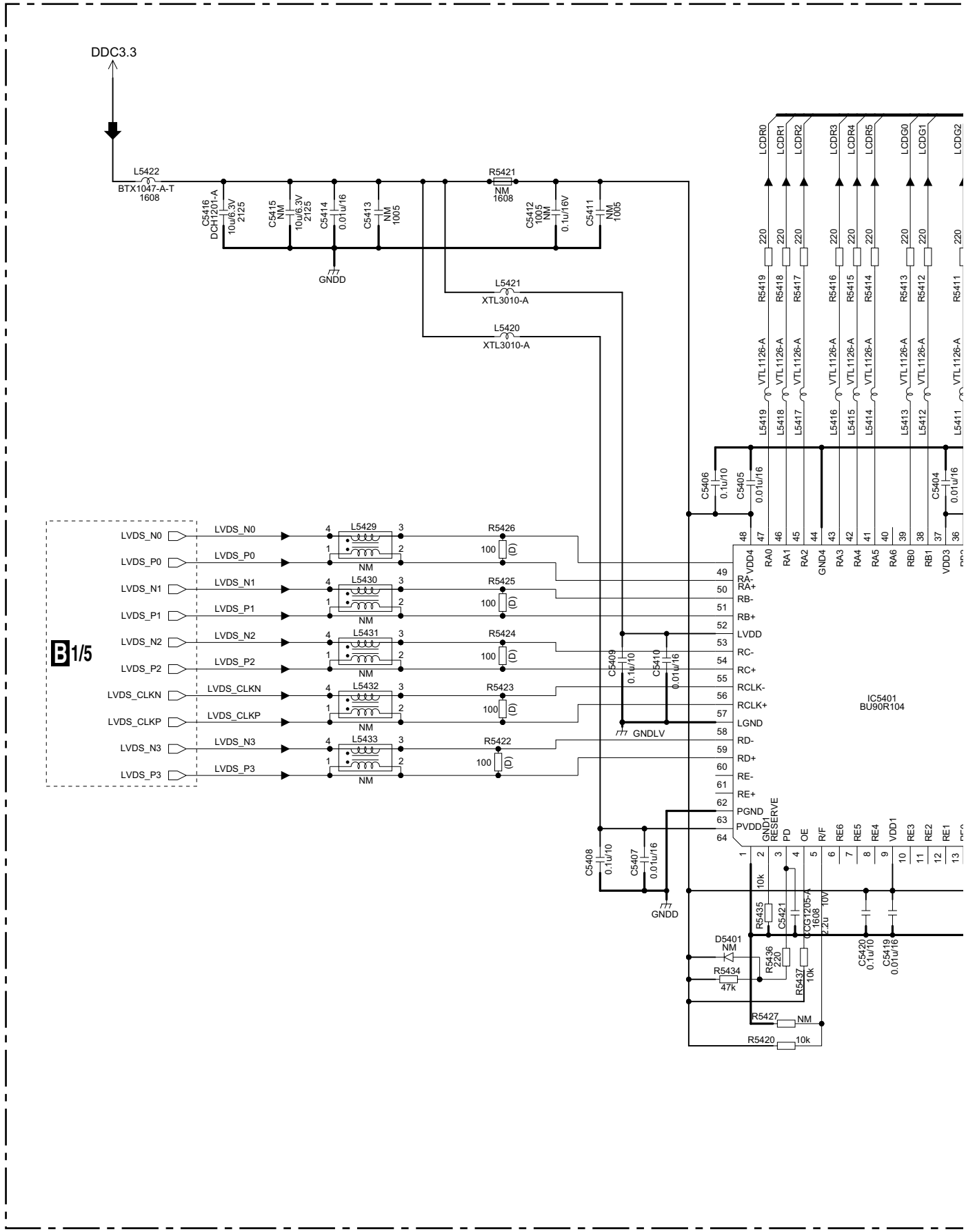

B5/5

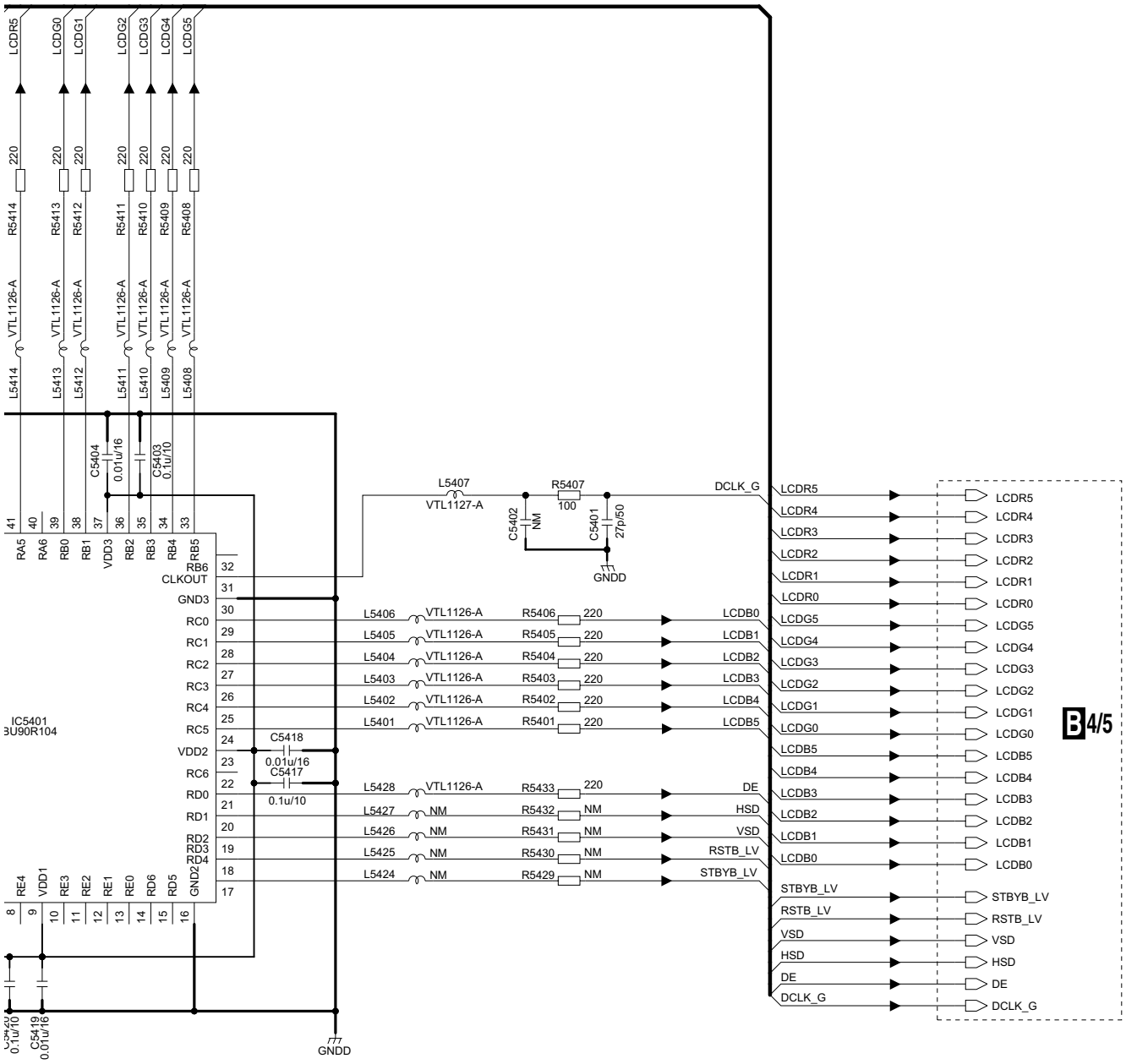

Ref.5401-5500

10.22 DVD CORE UNIT (MS7.2) (1/2 scale)

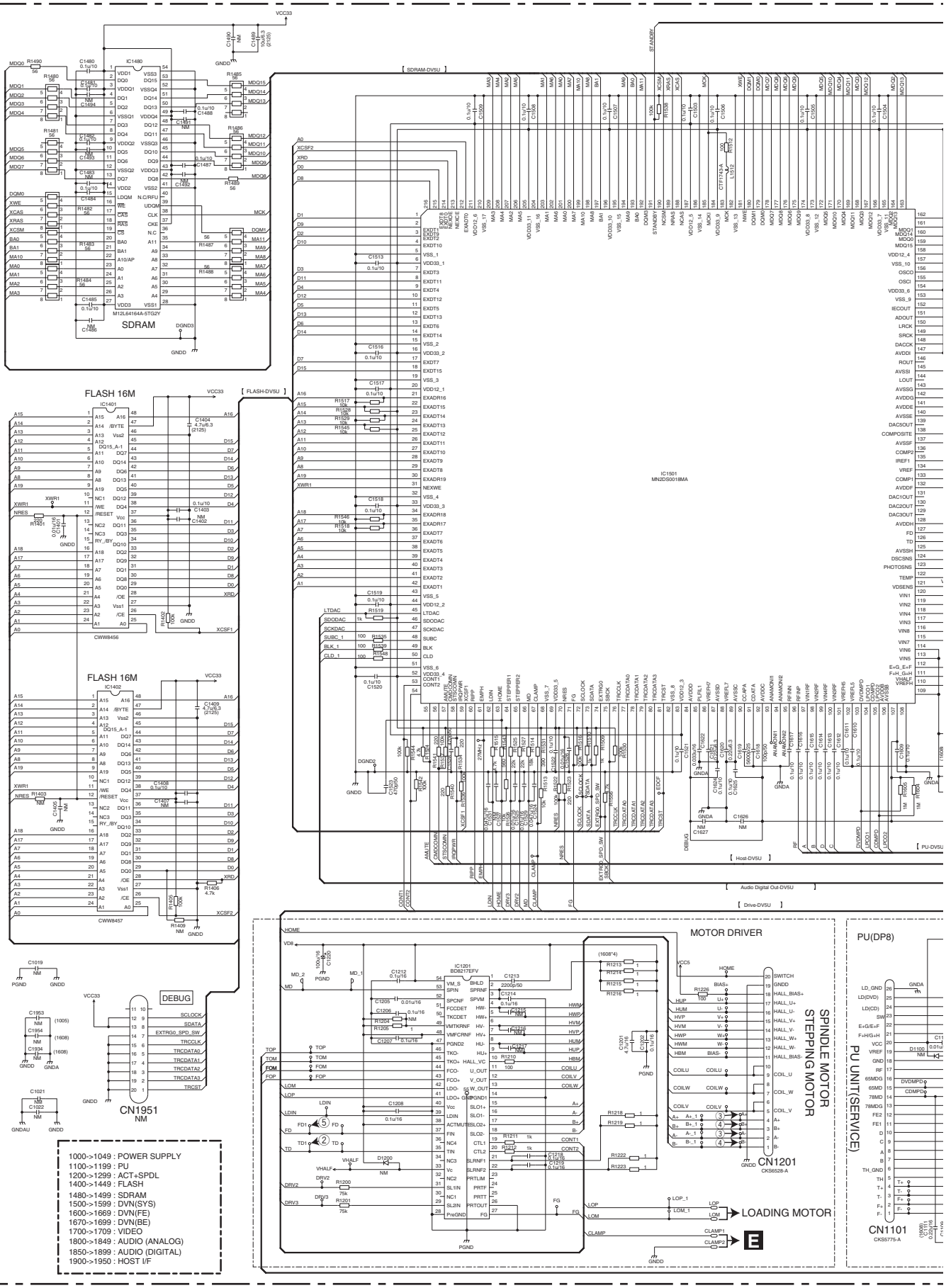

C DVD CORE UNIT(MS7.2)

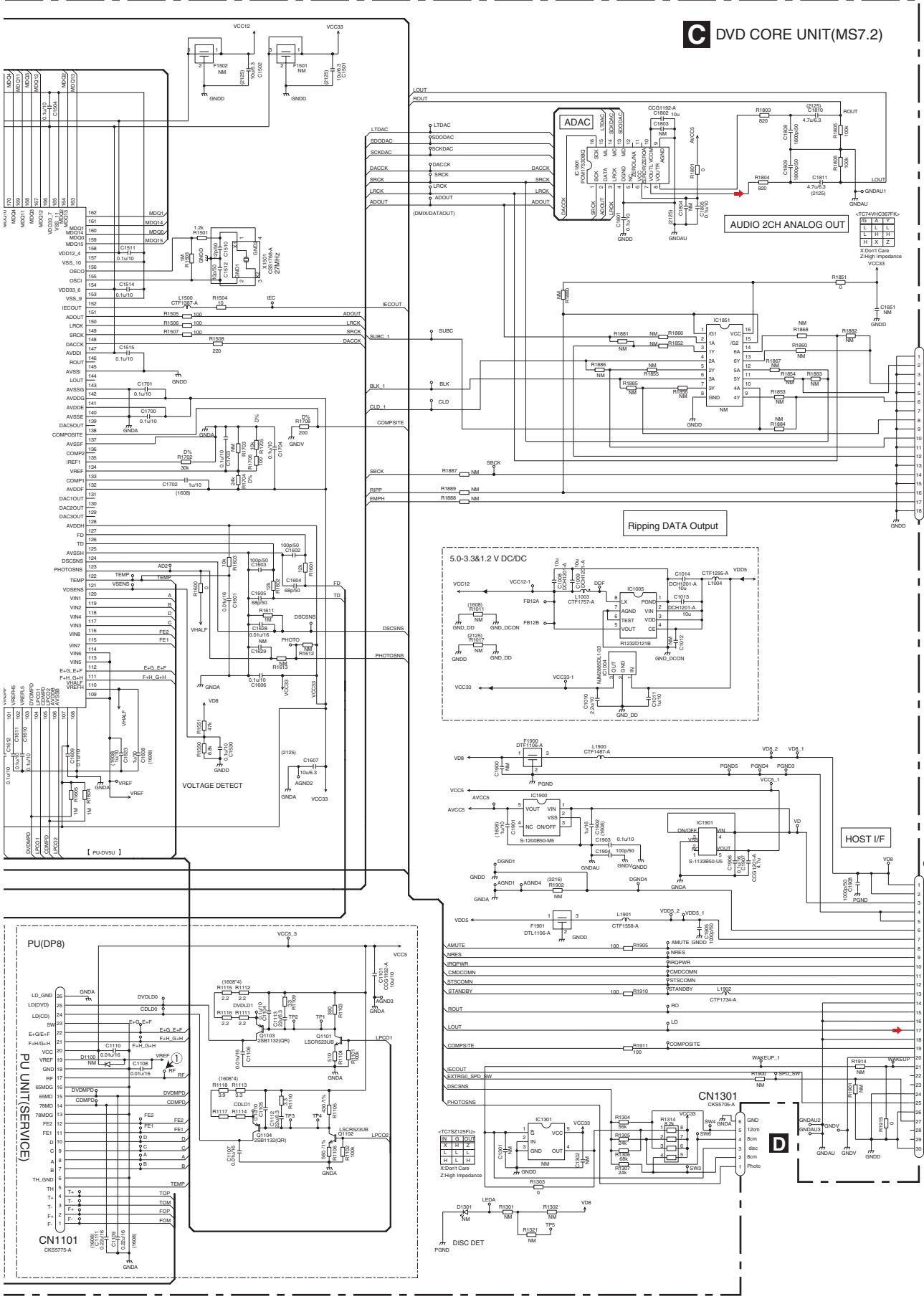

10.23 COMPOUND UNIT(A) and COMPOUND UNIT(B)

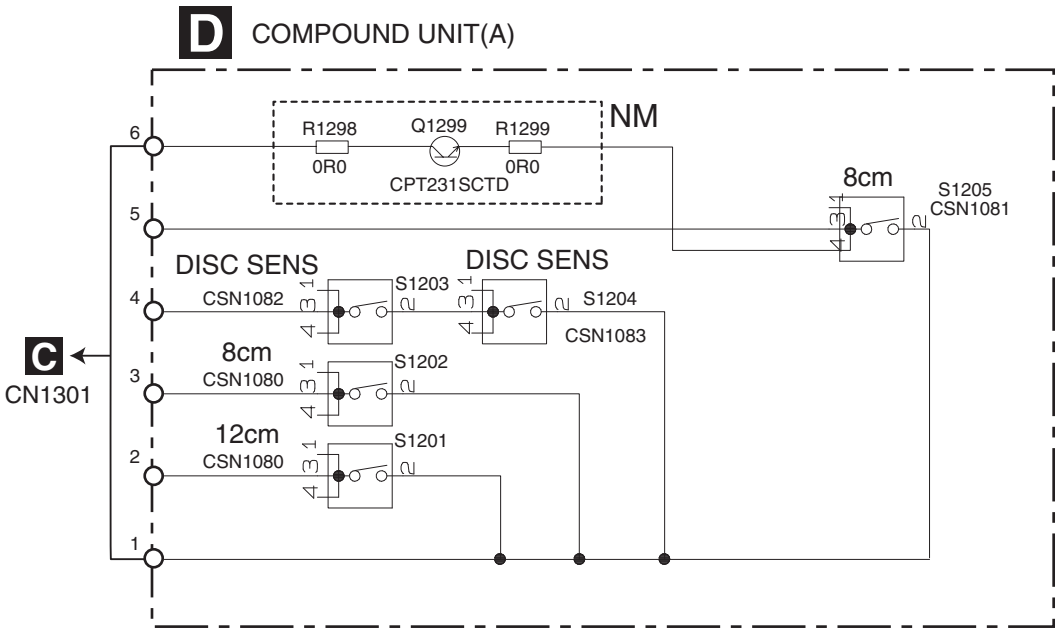

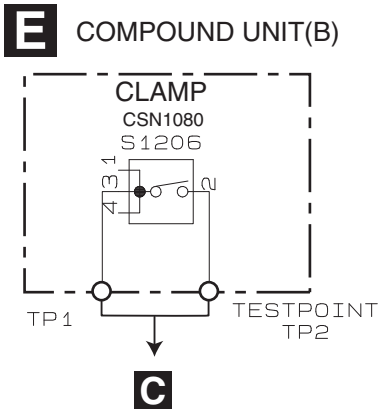

D E

10.24 KEYBOARD UNIT

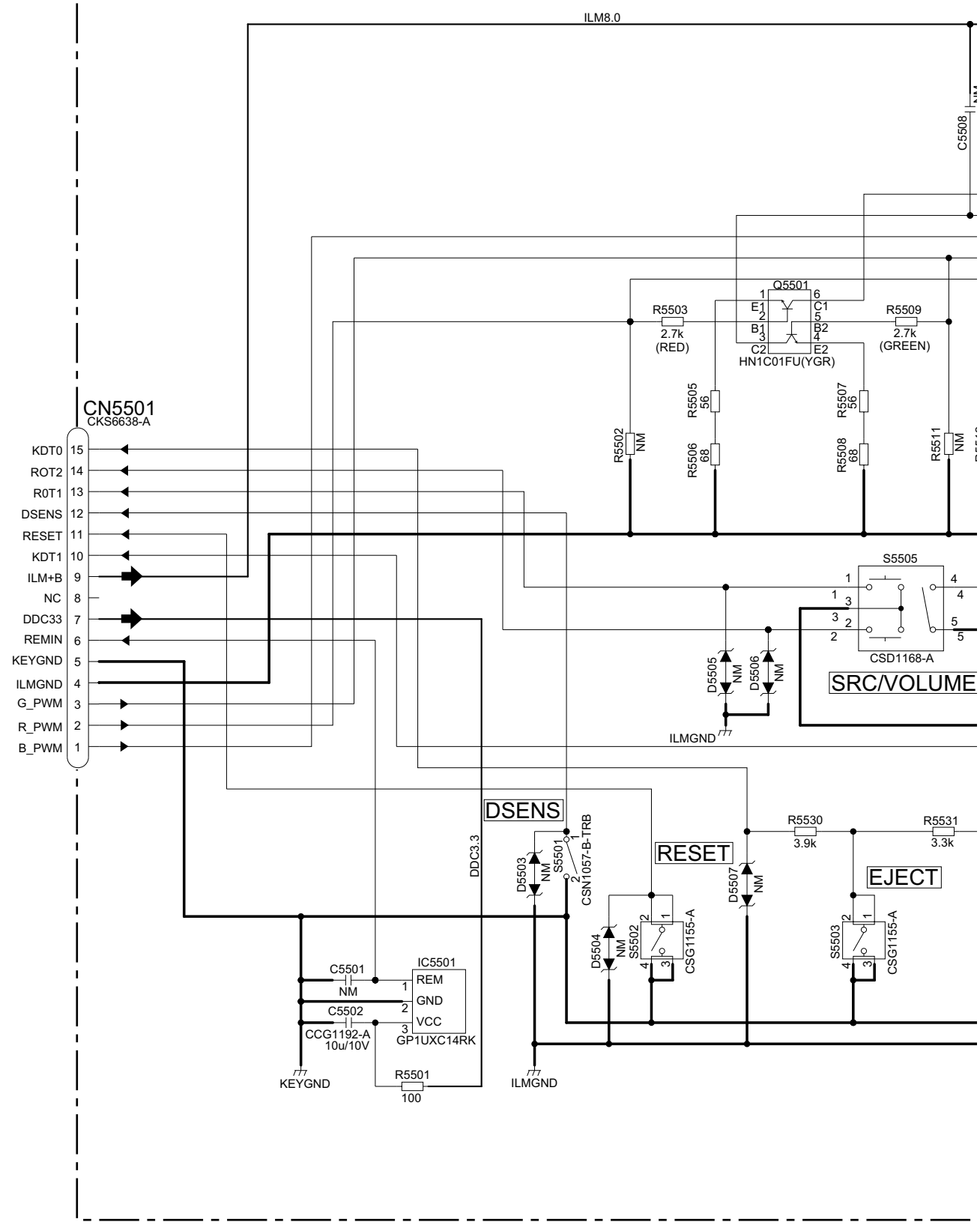

F KEYBOARD UNIT

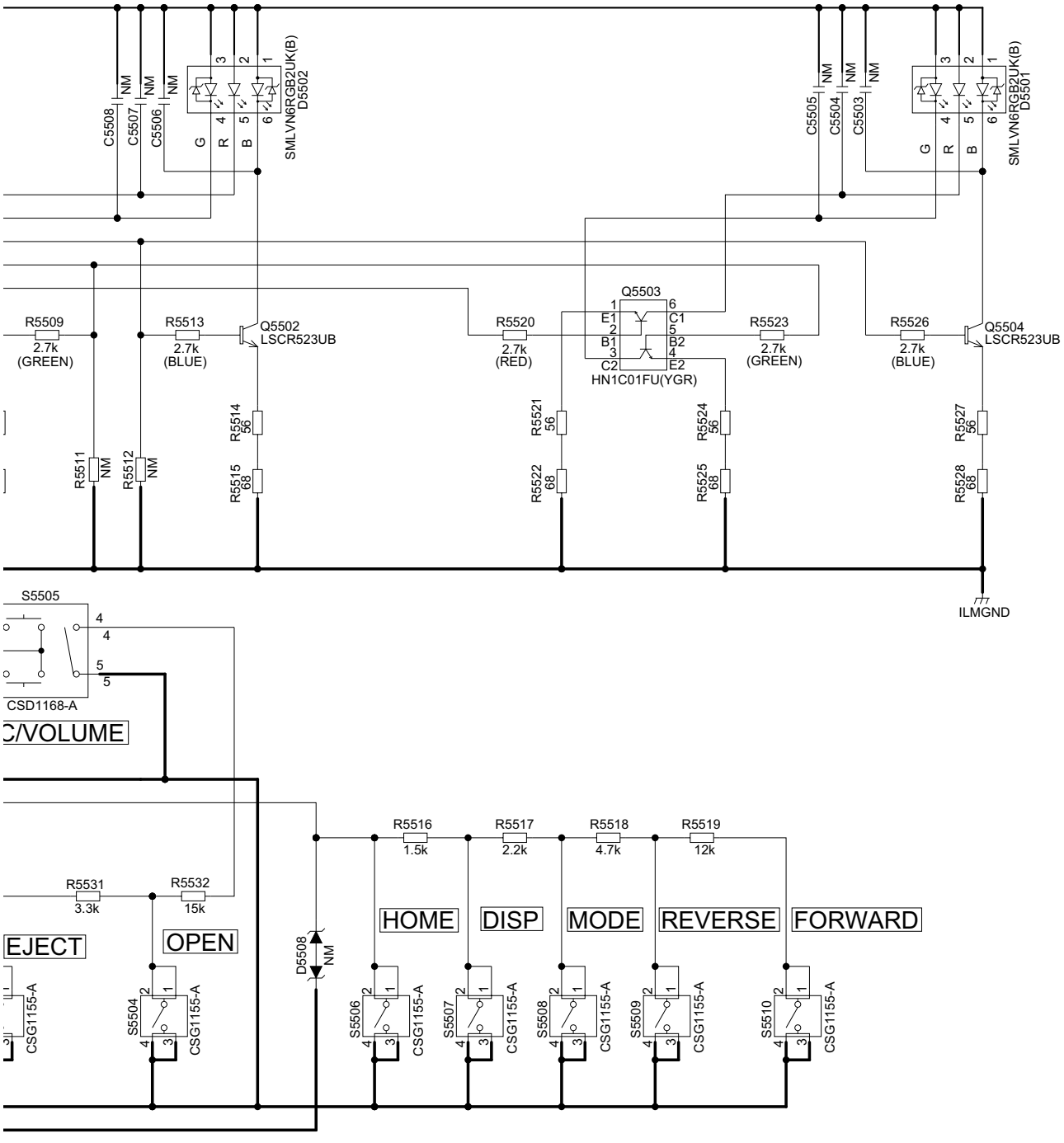

Ref.5501-

10.25 MAIN PCB UNIT and SW PCB UNIT

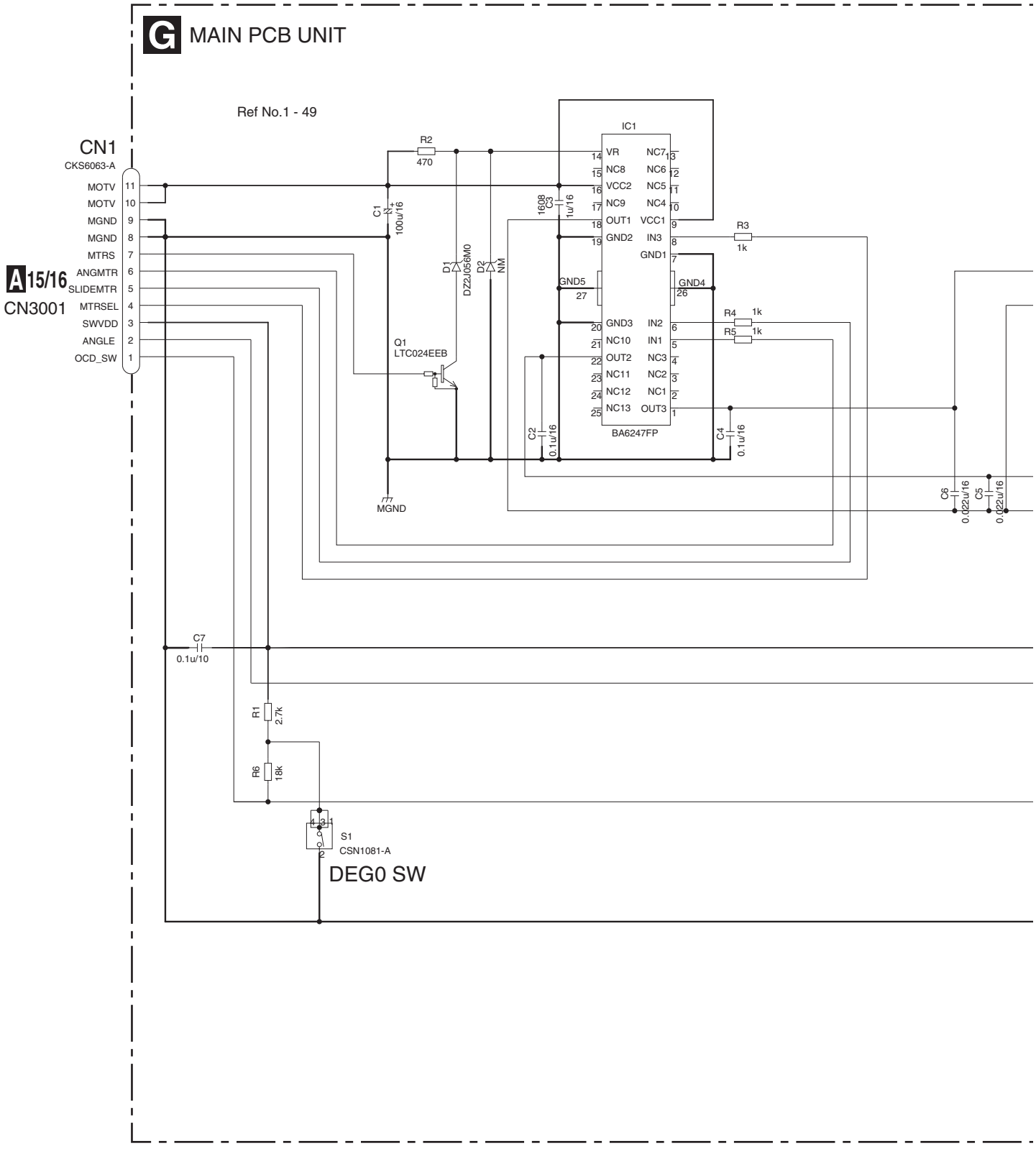

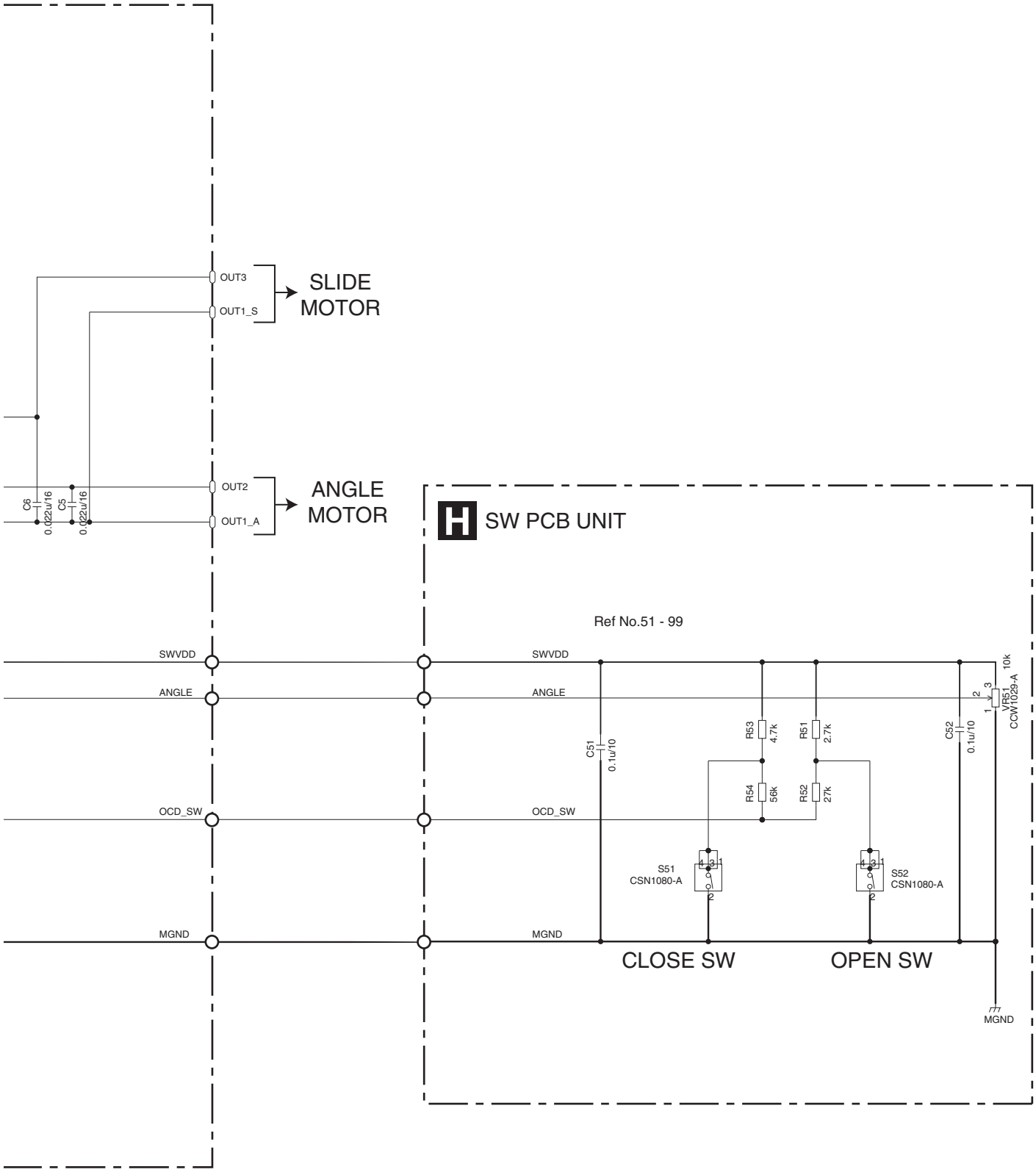
OUT3
OUT1_S
SLIDE MOTOR
OUT2
OUT1_A
ANGLE MOTOR
C6 0.022u/16
C5 0.022u/16
H SW PCB UNIT
Ref No.51 - 99
SWVDD
ANGLE
OCD_SW
MGND
C51 0.1u/10
R53 4.7k
R54 56k
R51 2.7k
R52 2.7k
C52 0.1u/10
VR51 CCW1029-A 10k
S51 CSN1080-A
S52 CSN1080-A
CLOSE SW
OPEN SW

10.26 WAVEFORMS

● DVD Core Unit(MS7.2)

Note: 1. Circled numbers represent the measurement point in the circuit diagram.
2. Reference voltage: 1.65V (TD1, FD1) (= VHALF)
2.2V (RF) (= VREF)

This waveform is monitored based on GND, and 1.65V or 2.2V offset is inserted using the oscilloscope.

1 RF
2 TD1
3 A+, A-
4 B+, B-
5 FD1

① RF 0.2 V/div(AC) 100 ns/div
CDRF(x4CLV)

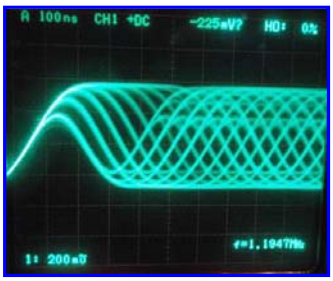

① RF 0.2 V/div(AC) 50 ns/div
DVDRF(x1.3ZCAV)

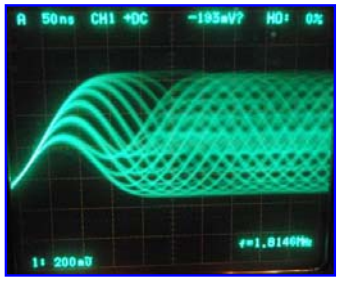

① RF 0.5 V/div 100 us/div
DVDRF (BD1mm)

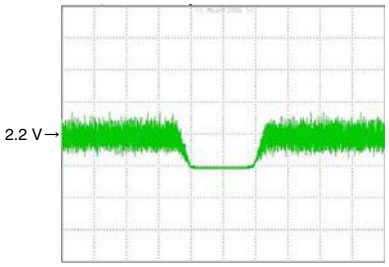

② TD1 0.1 V/div 100 us/div
Interval FWD (DVD)

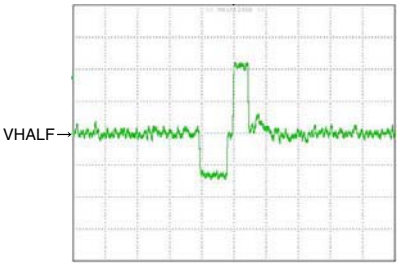

② TD1 0.1 V/div 100 us/div
Interval REV (DVD)

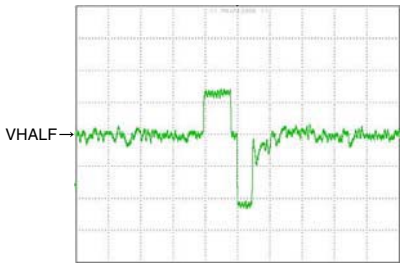

② TD1 0.2 V/div 500 us/div
Multi 32FWD (DVD)

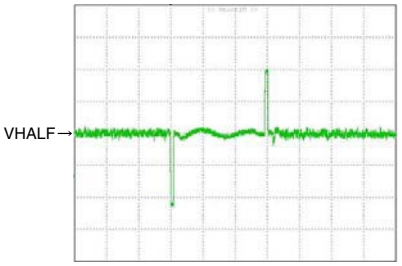

② TD1 0.2 V/div 500 us/div
Multi 32REV (DVD)

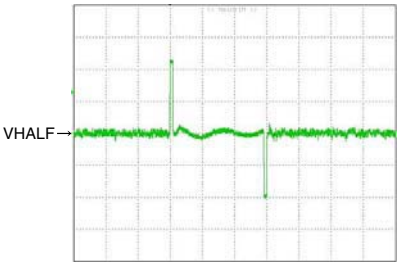

② CH1: TD1 0.5 V/div 10 ms/div
③ CH2: A+-A- 10.0 V/div 10 ms/div
④ CH3: B+-B- 10.0 V/div 10 ms/div
Traverse 900FWD (short)

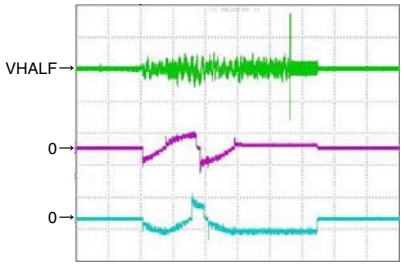

② CH1: TD1 0.5 V/div 10 ms/div
③ CH2: A+-A- 10.0 V/div 10 ms/div (Oscilloscope LPF set to 10 kHz)
④ CH3: B+-B- 10.0 V/div 10 ms/div (Oscilloscope LPF set to 10 kHz)
Traverse 900REV (short)

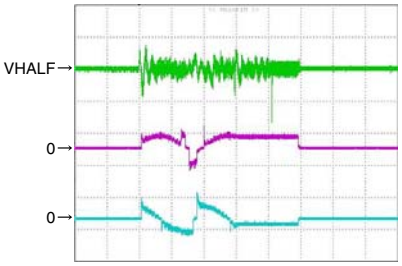

② CH1: TD1 0.5 V/div 20 ms/div
③ CH2: A+-A- 10.0 V/div 20 ms/div (Oscilloscope LPF set to 10 kHz)
④ CH3: B+-B- 10.0 V/div 20 ms/div (Oscilloscope LPF set to 10 kHz)
Traverse 5000FWD (long)

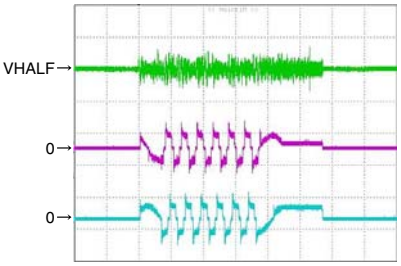

② CH1: TD1 0.5 V/div 20 ms/div
③ CH2: A+-A- 10.0 V/div 20 ms/div (Oscilloscope LPF set to 10 kHz)
④ CH3: B+-B- 10.0 V/div 20 ms/div (Oscilloscope LPF set to 10 kHz)
Traverse 5000REV (long)

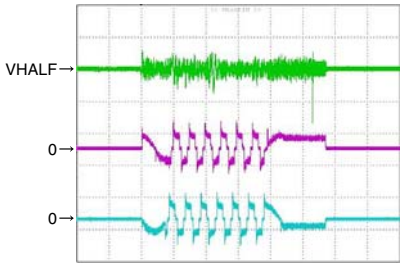

A

B

C

D

E

F

③ CH1: A^{+}-A^{-} 10 V/div 50 ms/div ④ CH2: B^{+}-B^{-} ID search Inside -> Outside 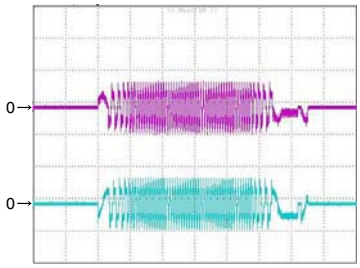	② TD1 0.5 Vdiv 100 ms/div Play TD (DVD) 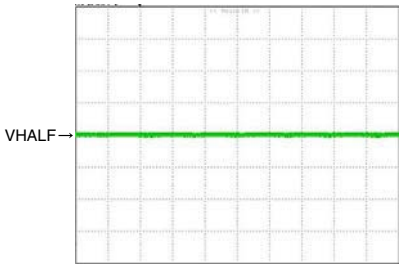	⑤ FD1 0.5 V/div 1 ms/div Focus Close (DVD) 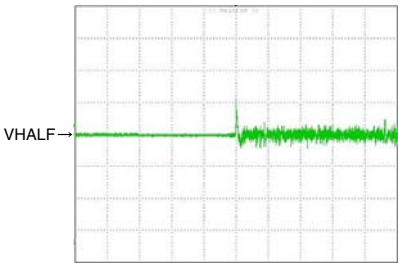
⑤ FD1 0.5 V/div 20 ms/div Play FD (DVD) 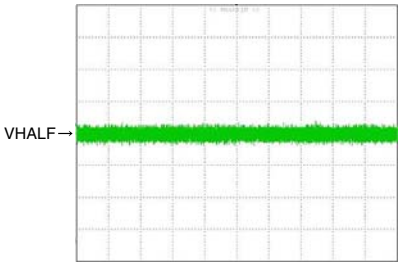	⑤ FD1 0.5 V/div 500 us/div Focus Jump L0 -> L1 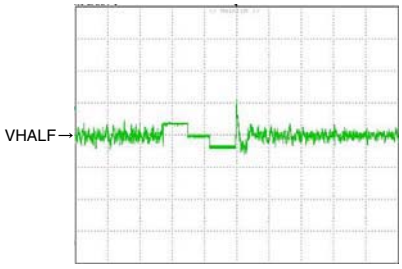	⑤ FD1 0.5 V/div 500 us/div Focus Jump L1 -> L0 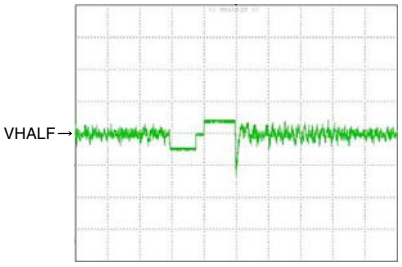

11. PCB CONNECTION DIAGRAM
11.1 MOTHER UNIT

NOTE FOR PCB DIAGRAMS

1. The parts mounted on this PCB include all necessary parts for several destination. For further information for respective destinations, be sure to check with the schematic diagram.
2. Viewpoint of PCB diagrams

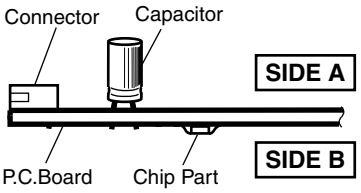

A MOTHER UNIT

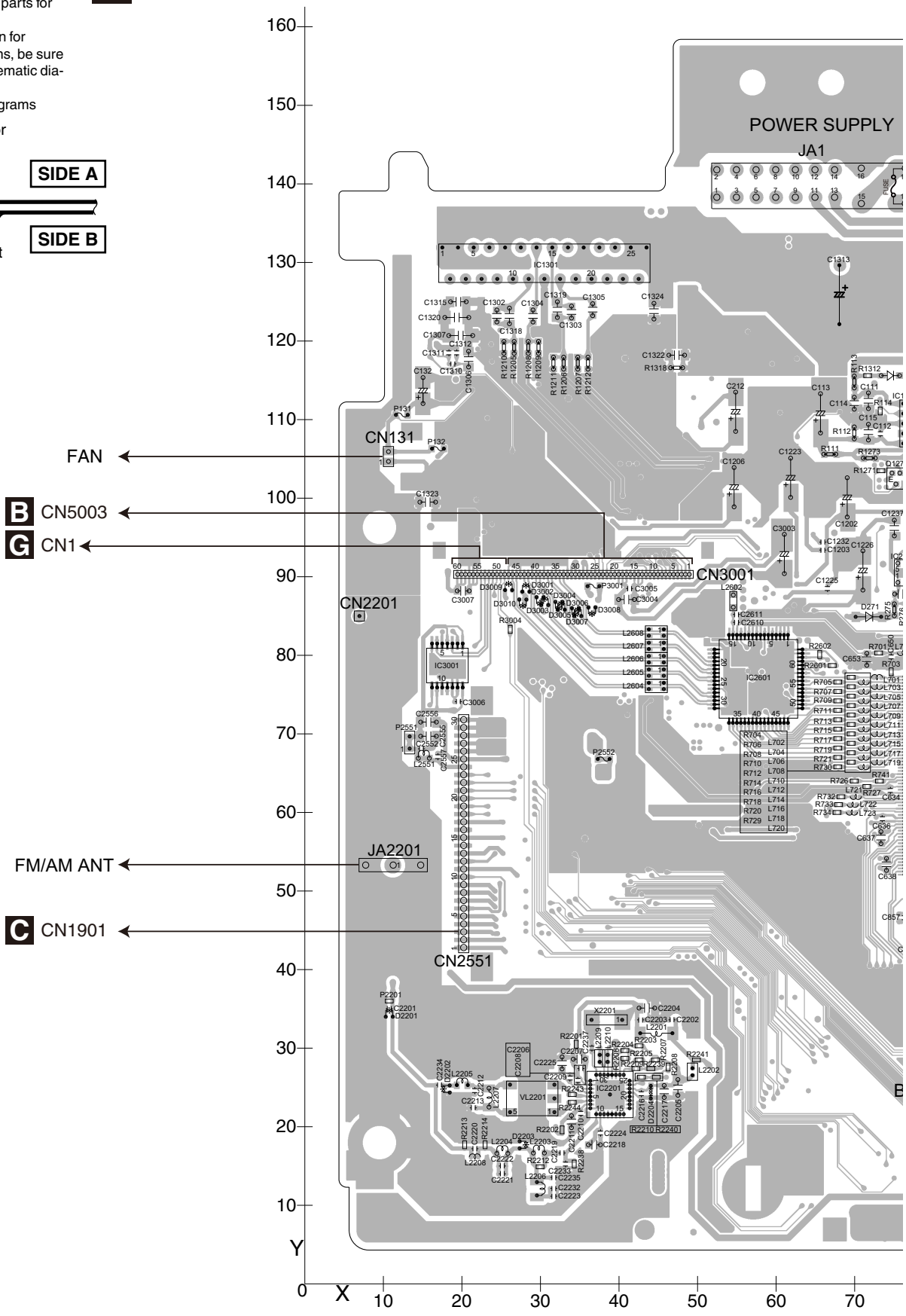

SIDE A

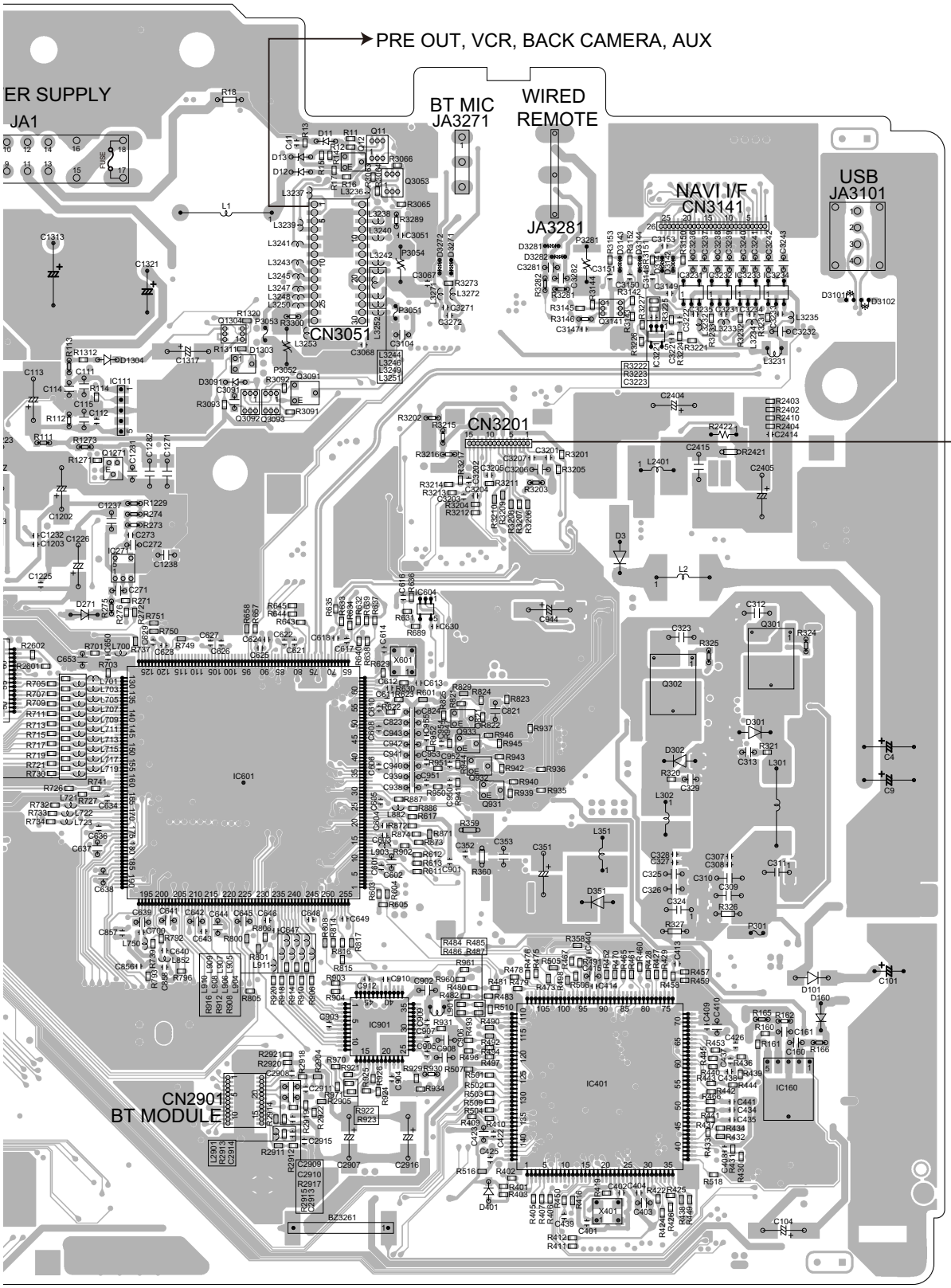
PRE OUT, VCR, BACK CAMERA, AUX
ER SUPPLY
JA1
BT MIC
JA3271
WIRED
REMOTE
JA3281
NAVI I/F
CN3141
USB
JA3101
CN3051
CN3201
1SEG DTV
TUNER
CN2901
BT MODULE
IC601
IC901
IC401
IC160
FRONT
70 80 90 100 110 120 130 140 150 160 170

A MOTHER UNIT

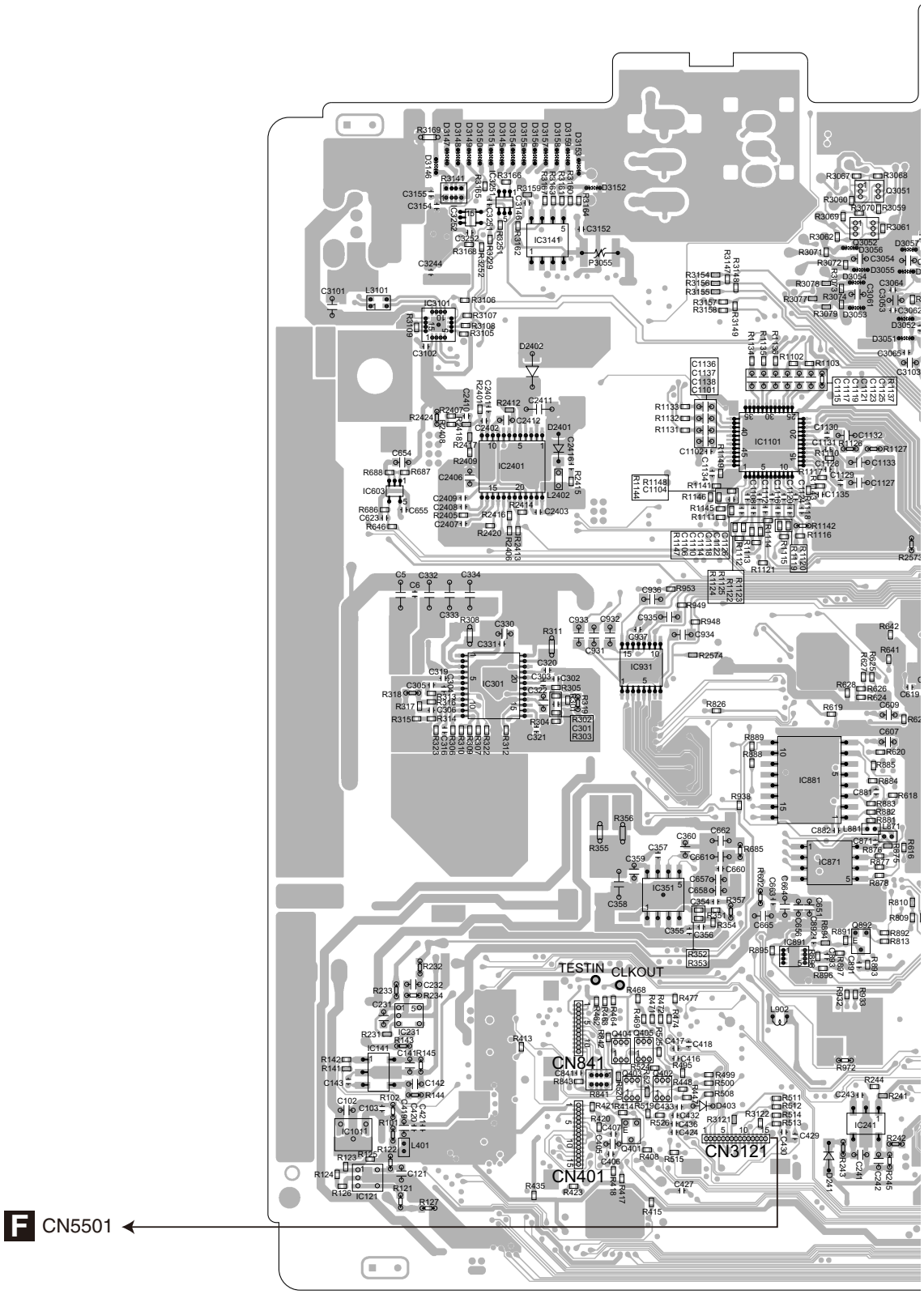

SIDE B

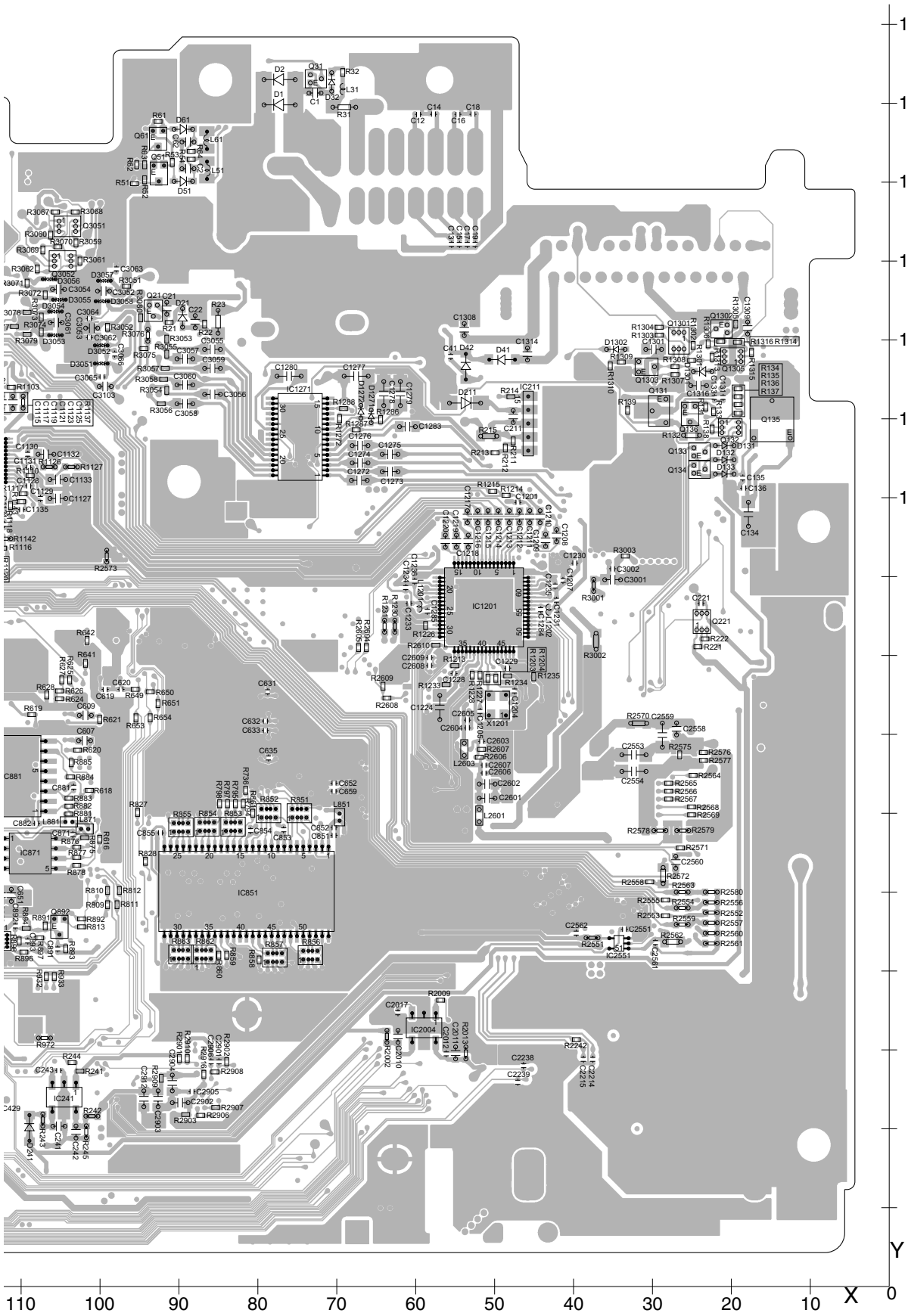
160
150
140
130
120
110
100
90
80
70
60
50
40
30
20
10
Y
0
110
100
90
80
70
60
50
40
30
20
10
X
A
B
C
D
E
F

11.2 MONITOR UNIT

B MONITOR UNIT

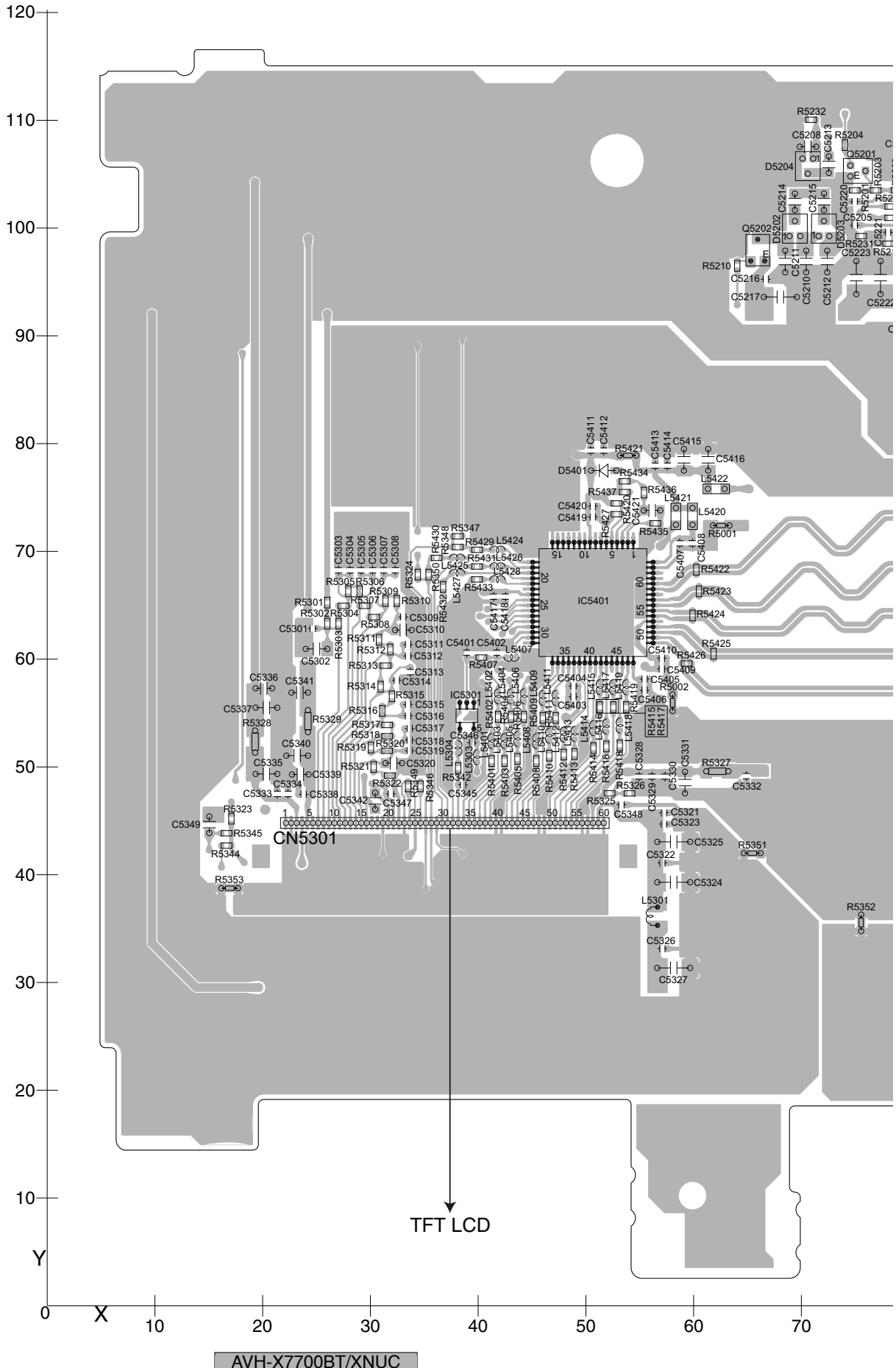

SIDE A

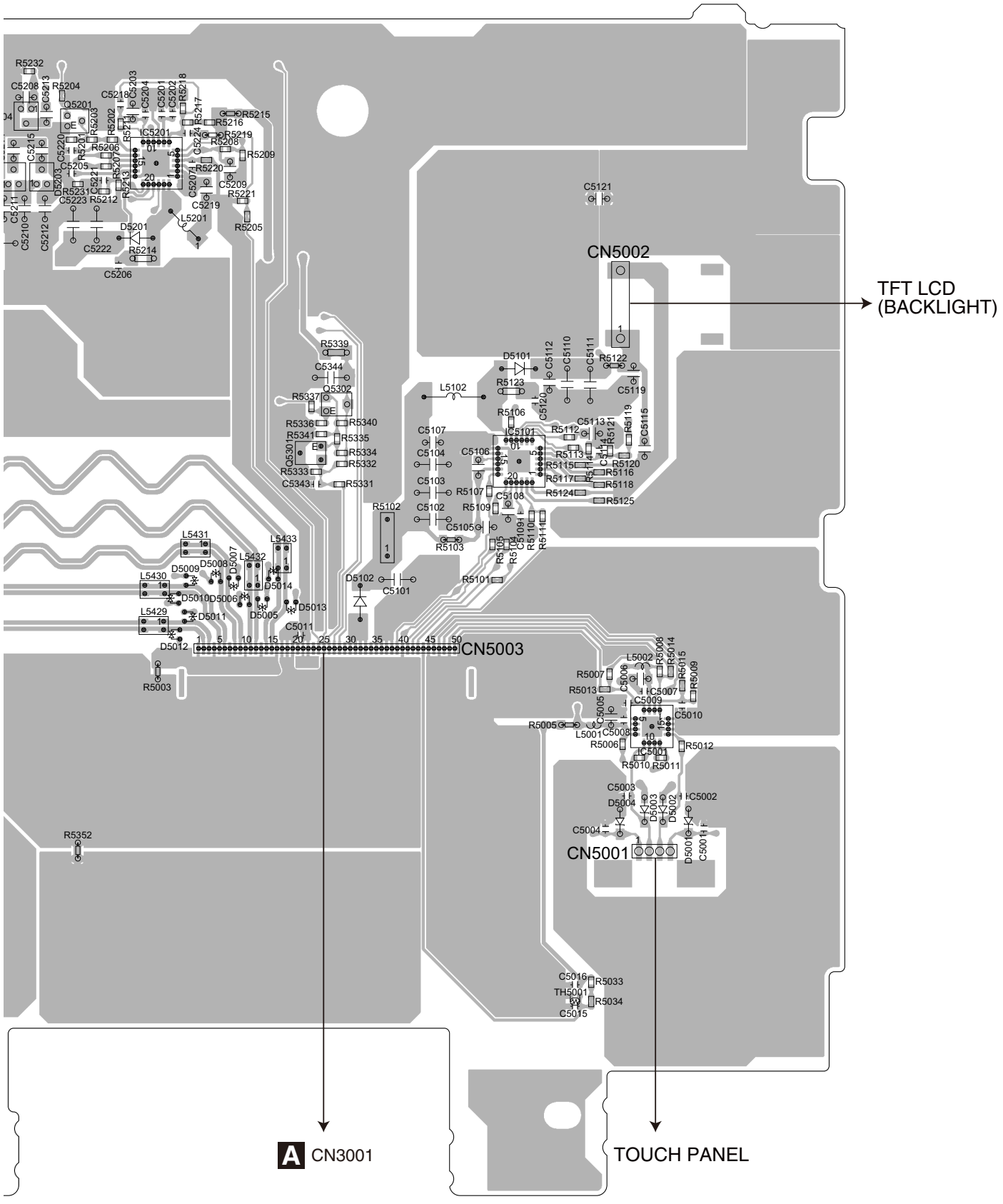
CN5002
TFT LCD
(BACKLIGHT)
CN5003
CN5001
A CN3001
TOUCH PANEL

B MONITOR UNIT

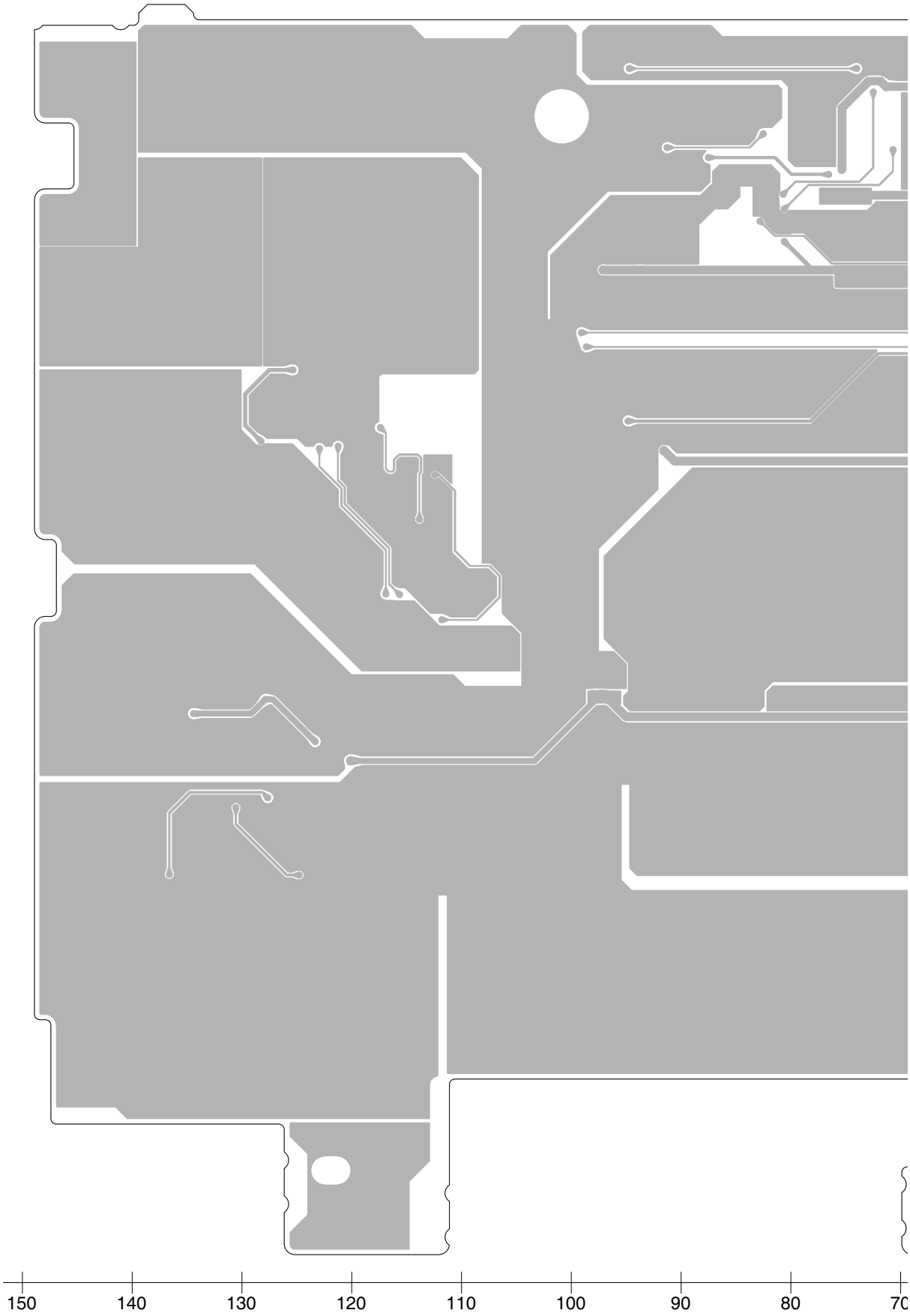

B

AVH-X7700BT/XNUC

SIDE B

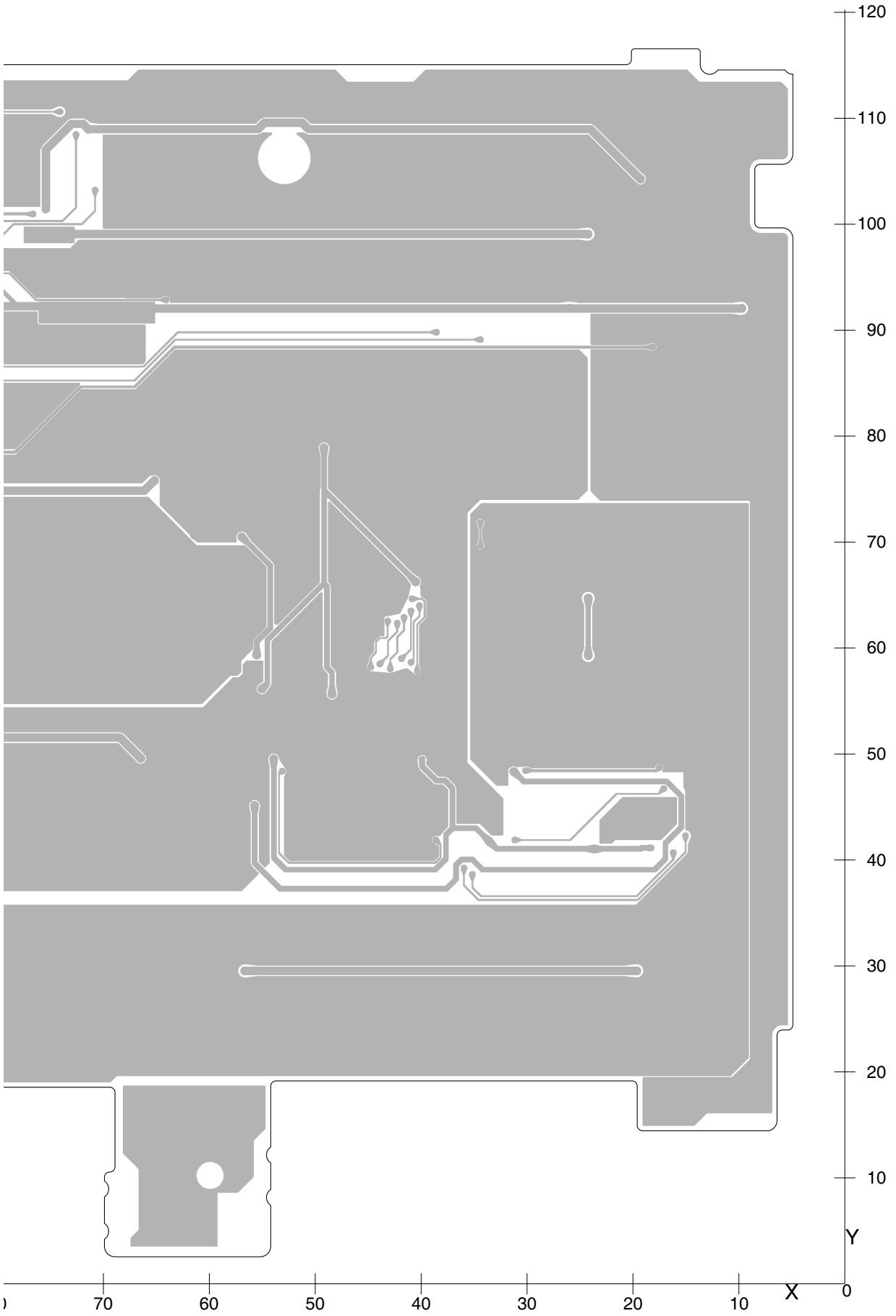

11.3 DVD CORE UNIT (MS7.2)

C DVD CORE UNIT(MS7.2)

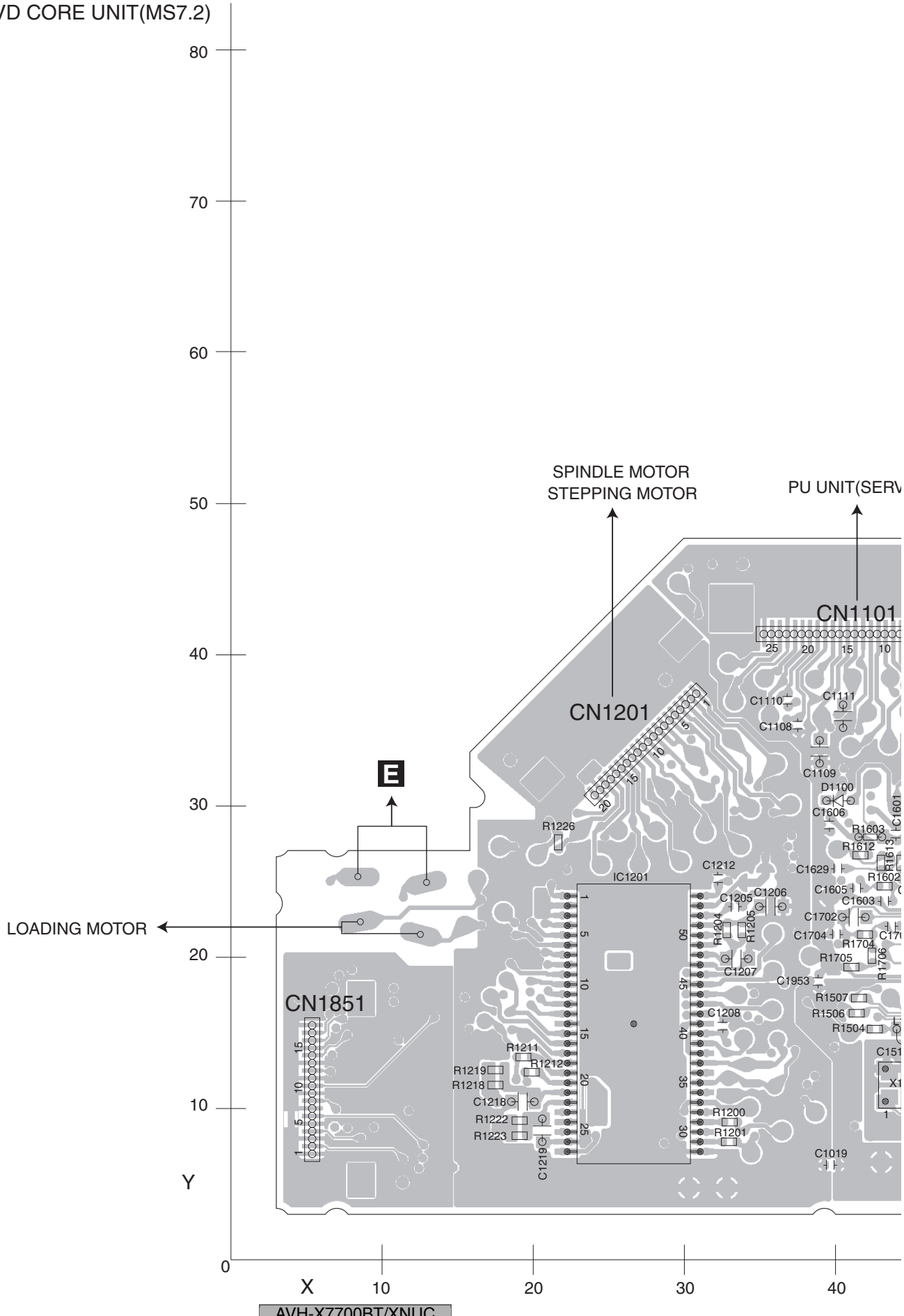

C

SIDE A

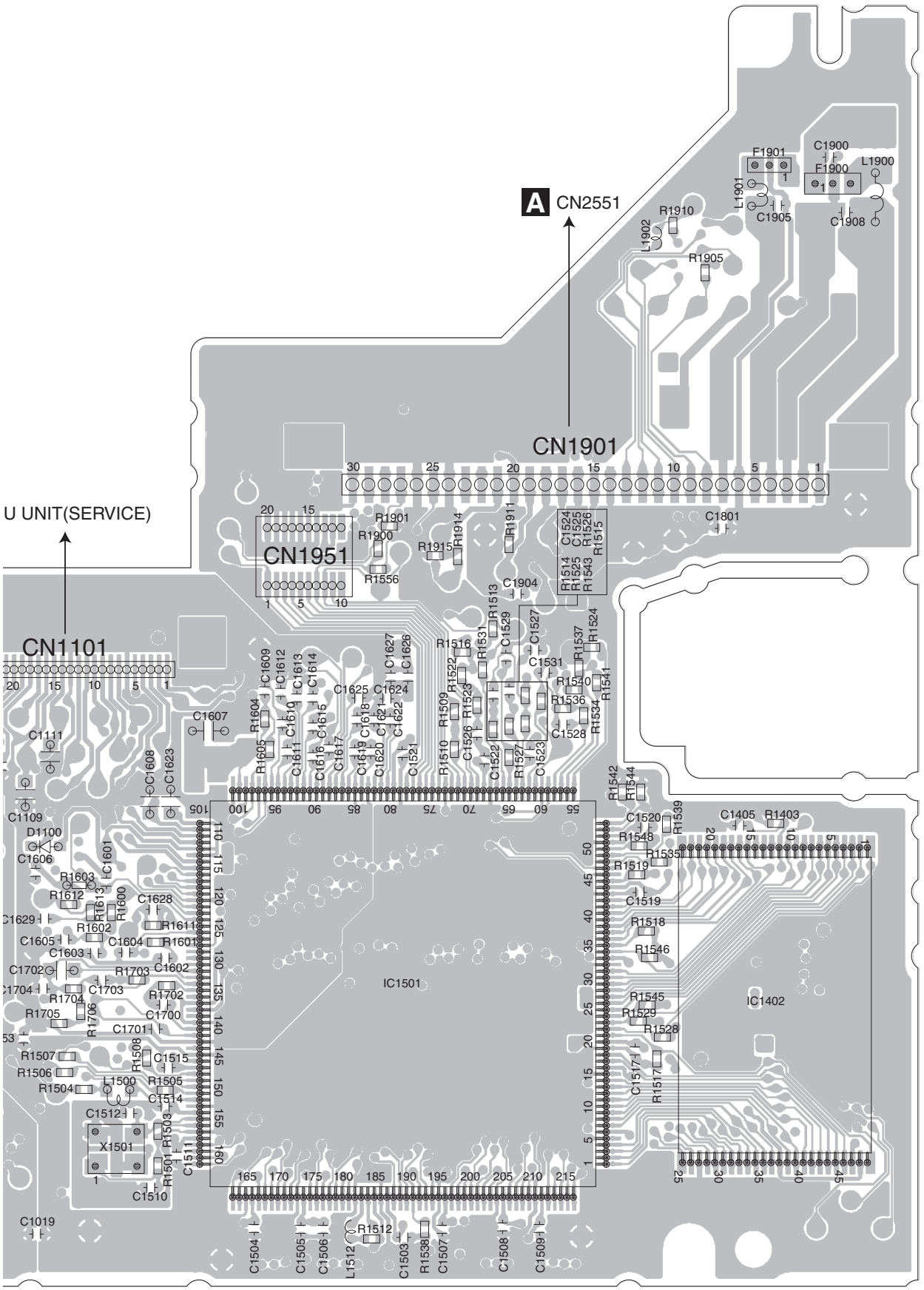
A CN2551
CN1901
CN1951
CN1101
U UNIT(SERVICE)
IC1501
IC1402
X1501
F1901
F1900
L1900
L1901
L1902
C1900
C1905
C1908
R1910
R1905
C1801
R1901
R1900
R1915
R1914
R1911
R1556
C1904
C1524
C1525
R1526
R1515
R1514
R1525
R1543
R1513
C1529
C1527
C1531
R1537
R1524
R1516
R1531
R1522
R1523
R1509
R1510
C1526
C1522
R1527
C1523
C1528
R1540
R1536
R1534
R1541
C1625
C1624
C1621
C1622
C1626
C1627
C1609
C1612
C1613
C1614
C1610
C1611
C1615
C1616
C1617
C1618
C1619
C1620
C1521
R1604
R1605
C1607
C1111
C1608
C1623
C1109
D1100
C1606
C1601
R1603
R1612
R1613
R1600
C1628
C1629
R1602
R1611
C1605
C1604
R1601
C1603
C1702
C1704
R1703
C1602
C1703
R1704
R1702
R1705
R1706
C1700
C1701
R1507
R1506
R1504
R1508
C1515
L1500
R1505
C1514
C1512
R1503
C1511
R1501
C1510
C1019
C1504
C1505
C1506
L1512
R1512
C1503
R1538
C1507
C1508
C1509
R1542
R1544
C1520
R1548
R1539
R1535
C1405
R1403
R1519
C1519
R1518
R1546
R1545
R1529
R1528
C1517
R1517

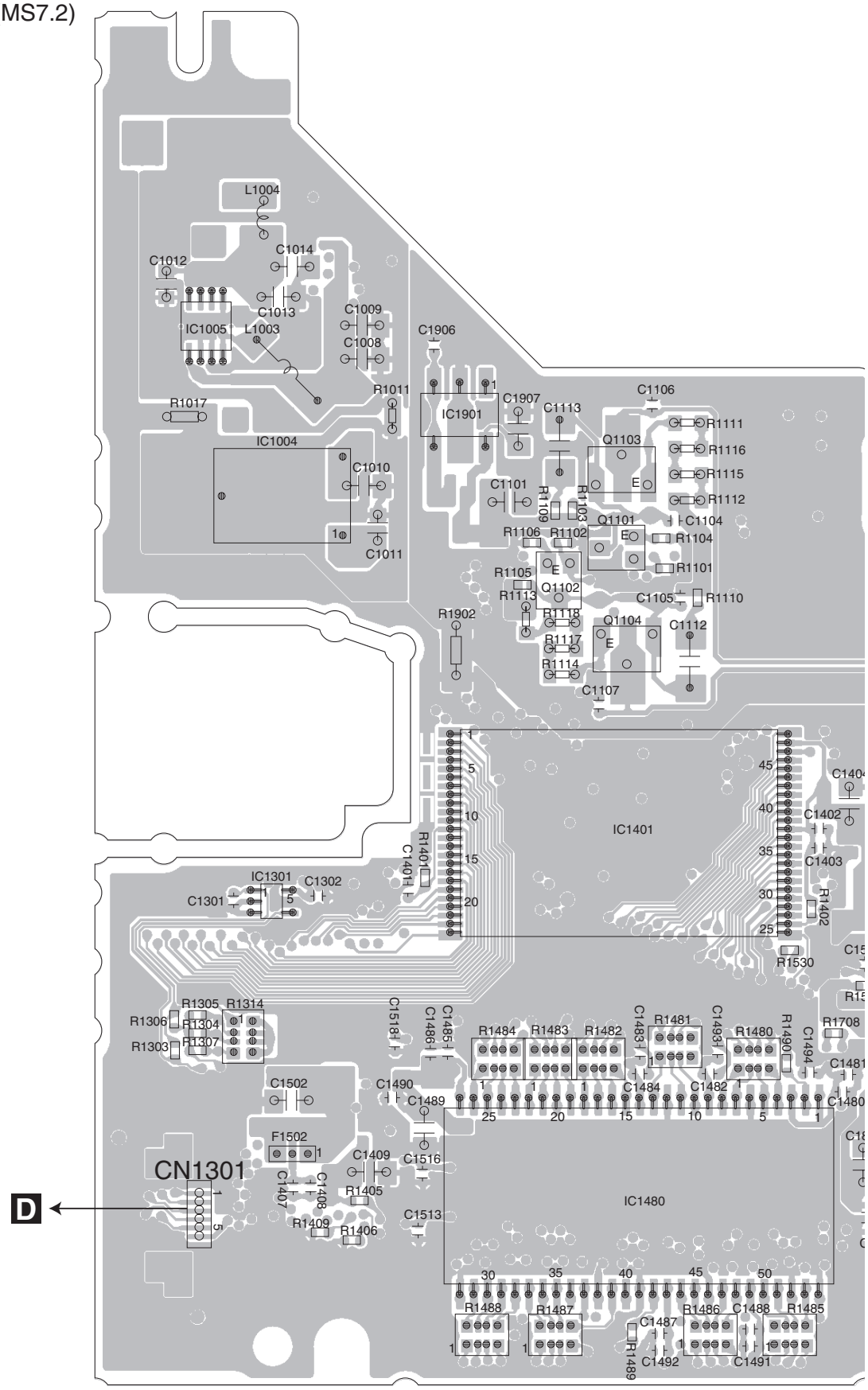
L1004
C1012
C1014
C1013
IC1005
L1003
C1009
C1008
R1011
R1017
IC1004
C1010
C1011
C1906
IC1901
C1907
C1113
C1106
R1111
R1116
R1115
R1112
Q1103
C1104
C1101
R1109
R1103
Q1101
R1106
R1102
R1104
R1101
R1105
Q1102
R1113
C1105
R1110
R1902
R1118
Q1104
C1112
R1117
R1114
C1107
IC1401
C1402
C1403
R1402
R1530
C1401
R1401
IC1301
C1302
C1301
R1305
R1314
R1306
R1304
R1303
R1307
C1518
C1485
C1486
R1484
R1483
R1482
C1483
R1481
C1493
R1480
R1490
C1494
R1708
C1481
C1480
C1502
C1490
C1489
C1484
C1482
F1502
CN1301
C1409
C1516
C1407
C1408
R1405
C1513
R1409
R1406
IC1480
R1488
R1487
C1487
R1486
C1488
R1485
R1489
C1492
C1491
D
90
80
70
60

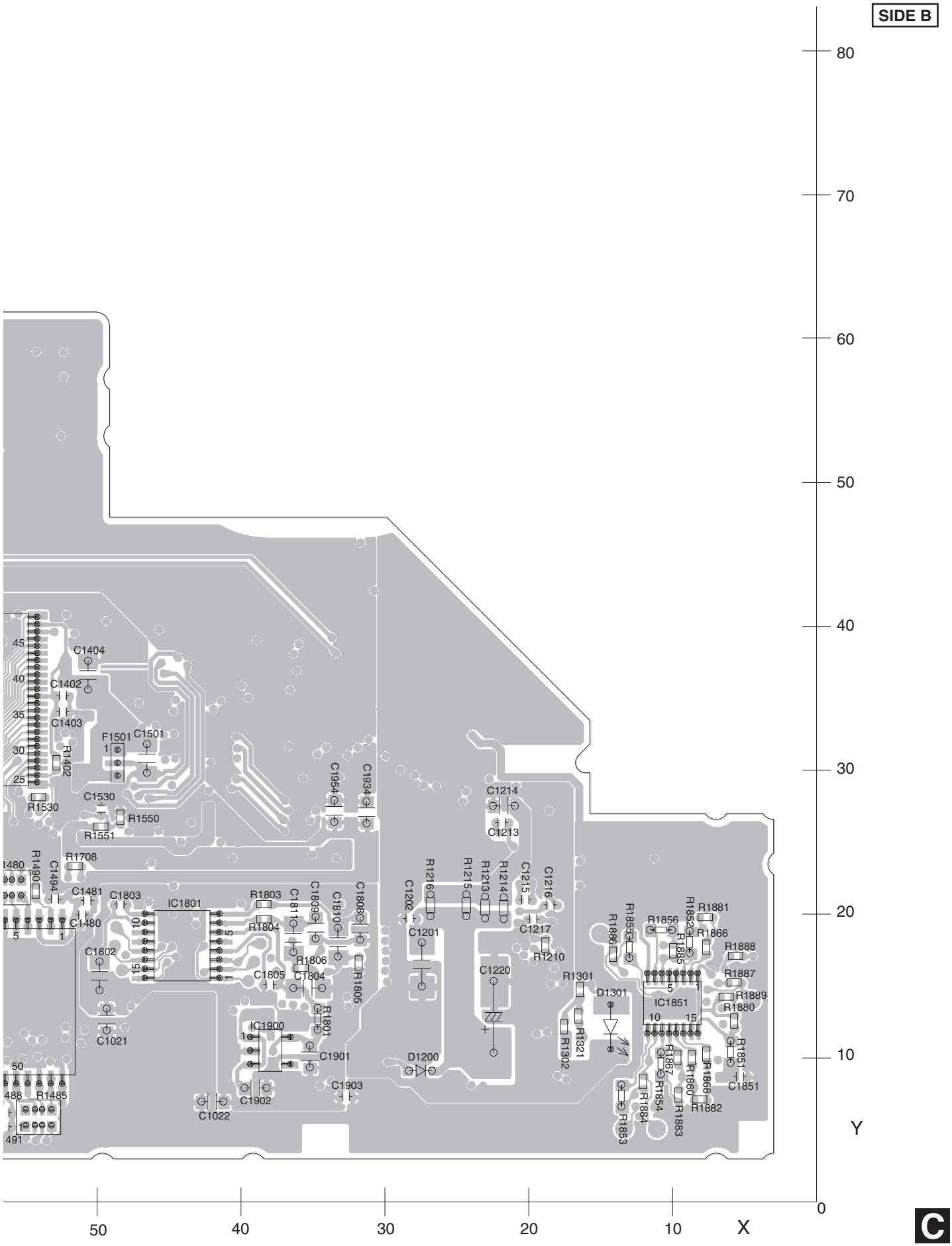
SIDE B
C1404
C1402
C1403
F1501
C1501
R1402
R1530
C1530
R1550
R1551
R1708
R1490
C1494
C1481
C1480
C1803
IC1801
R1803
R1804
C1811
C1809
C1810
C1808
C1802
C1805
C1804
R1806
R1805
C1021
IC1900
R1801
C1901
C1902
C1903
C1022
R1485
C1954
C1934
C1214
C1213
C1202
R1216
R1215
R1213
R1214
C1215
C1216
C1201
C1217
R1210
C1220
D1200
R1301
R1302
R1321
D1301
R1886
R1855
R1856
R1852
R1881
R1885
R1866
R1888
R1887
R1889
R1880
IC1851
R1851
C1851
R1867
R1860
R1868
R1882
R1854
R1884
R1883
R1853
Y
X
0
10
20
30
40
50
60
70
80

C

11.4 COMPOUND UNIT(A) and COMPOUND UNIT(B)

D COMPOUND UNIT(A)

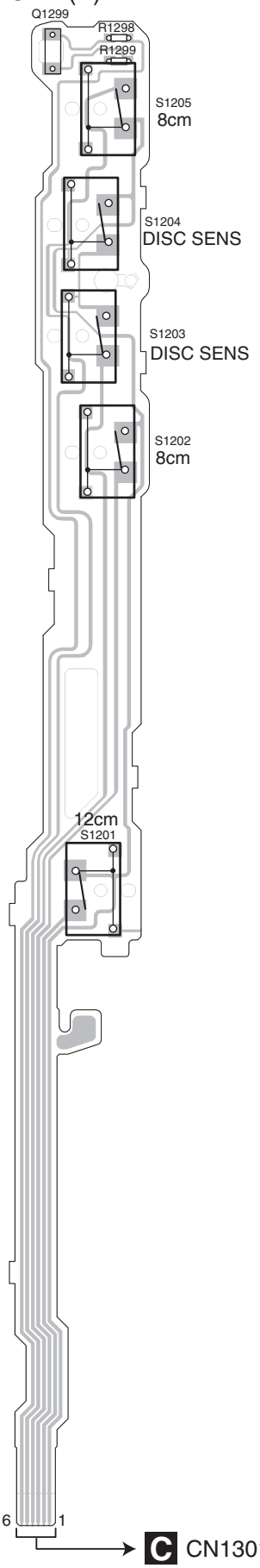

E COMPOUND UNIT(B)

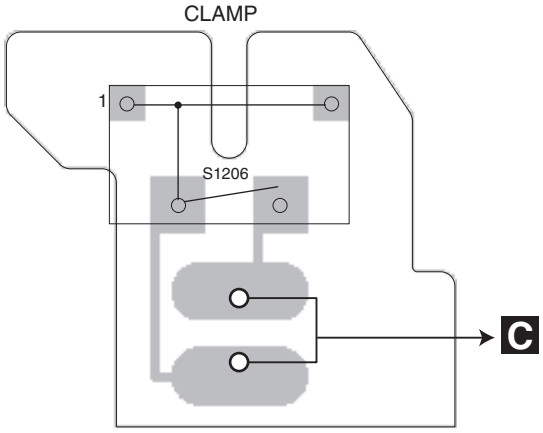

D **E**

11.5 KEYBOARD UNIT

F KEYBOARD UNIT **SIDE A**

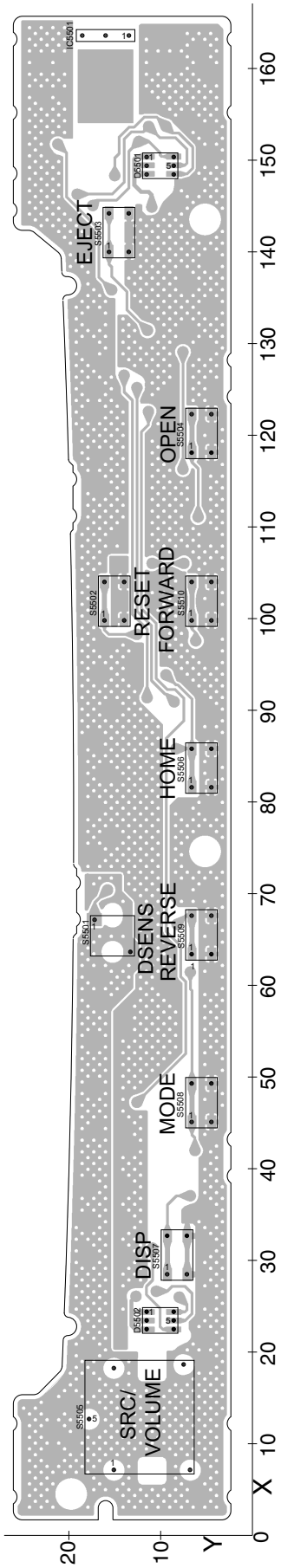

F KEYBOARD UNIT **SIDE B**

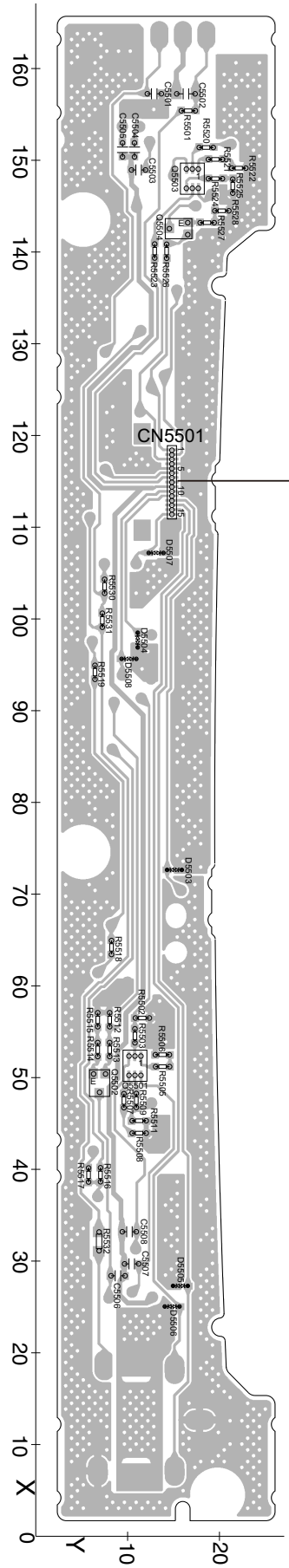

A CN3121

11.6 MAIN PCB UNIT

G MAIN PCB UNIT

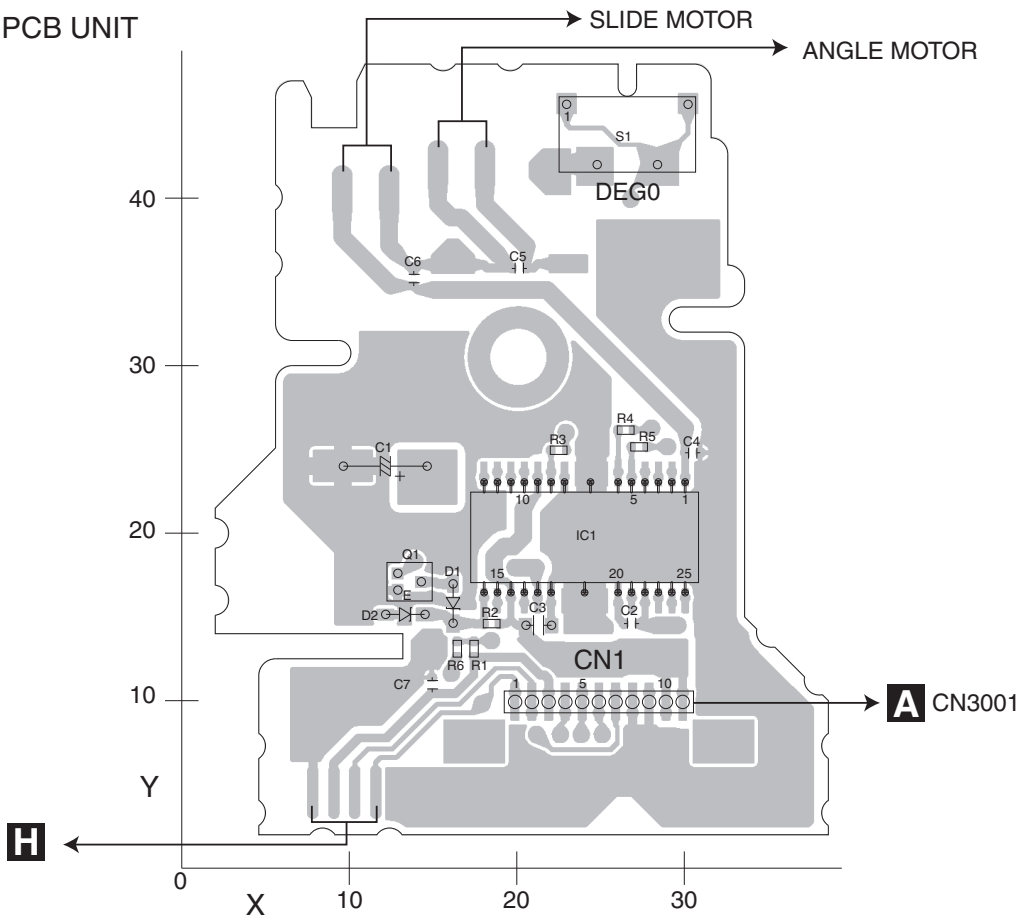

G MAIN PCB UNIT

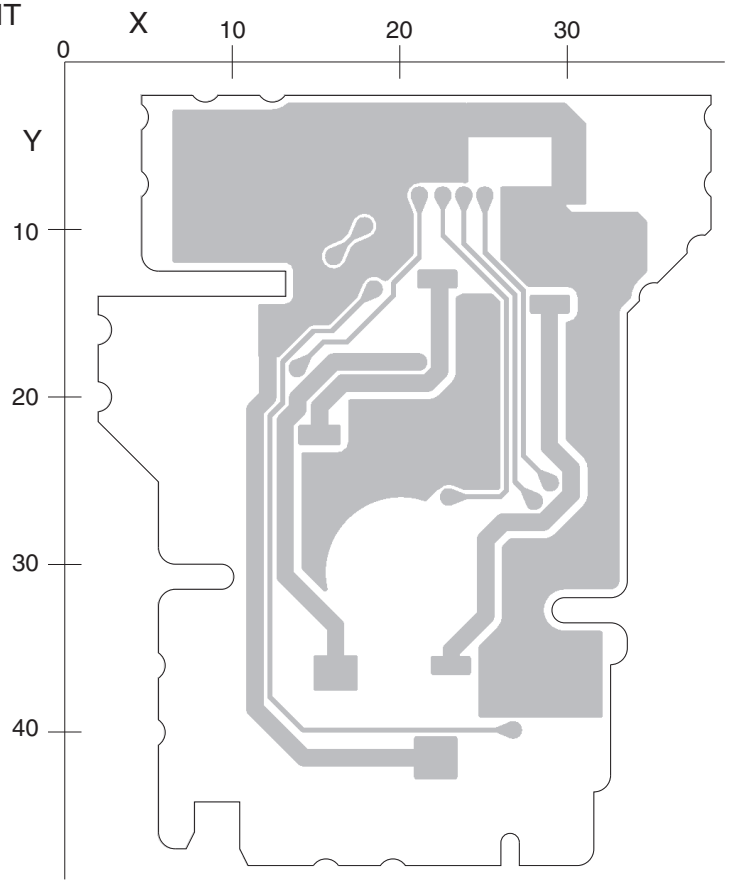

G

11.7 SW PCB UNIT

H SW PCB UNIT

SIDE A

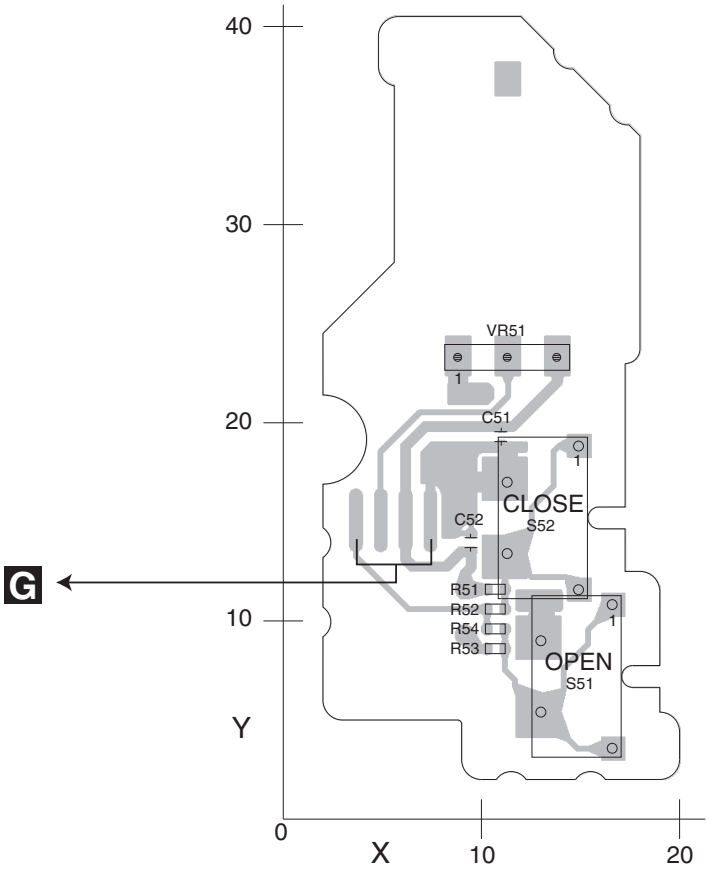

H SW PCB UNIT

SIDE B

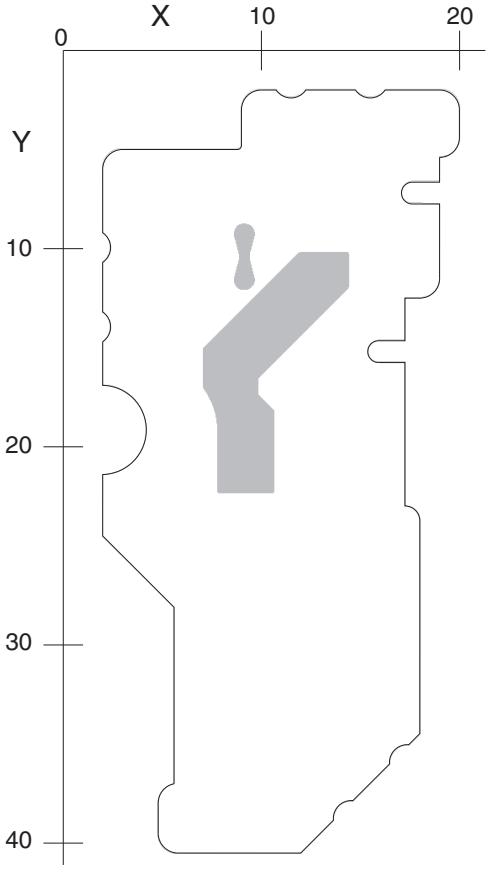

12. ELECTRICAL PARTS LIST

NOTE:

- *Parts whose parts numbers are omitted are subject to being not supplied.*
- *The part numbers shown below indicate chip components.*

  Chip Resistor

  RS1/◯S◯◯◯J,RS1/◯◯S◯◯◯J

  Chip Capacitor (except for CQS.....)

  CKS....., CCS....., CSZS.....
- *The ⚠ mark found on some component parts indicates the importance of the safety factor of the part. Therefore, when replacing, be sure to use parts of identical designation.*
- *Meaning of the figures and others in the parentheses in the parts list.*

  Example) IC 301 is on the point (face A, 91 of x-axis, and 111 of y-axis) of the corresponding PC board.

  IC 301 (A, 91, 111) IC NJM2068V
- *The expression of the unit in this manual is shown by u instead of μ. Please do not make a mistake.*

Circuit Symbol and No. **Part No.**

A:AVH-X7700BT/XNUC

B:AVH-X7700BT/XNEW5

C:AVH-X7700BT/XNUW5

D:AVH-X7750BT/XNRC

E:AVH-X7750BT/XNRD

F:AVH-X7750TV/XNRD

G:AVH-X7750BT/XNRI

Unit Number : CWN8784(A)
Unit Number : CWN8782(B)
Unit Number : CWN8783(C)
Unit Number : CWN8785(D)
Unit Number : CWN8787(E)
Unit Number : CWN8786(F)
Unit Number : CWN8788(G)
Unit Name : Mother Unit
Unit Number : CWN9246
Unit Name : Monitor Unit
Unit Number : CWX4606
Unit Name : DVD Core Unit(MS7.2)
Unit Number : CWX4034
Unit Name : Compound Unit(A)
Unit Number : CWX3394
Unit Name : Compound Unit(B)
Unit Number : CWN8792
Unit Name : Keyboard Unit
Unit Number : EWX2008

Circuit Symbol and No. **Part No.**

Unit Name : Main PCB Unit
Unit Number : EWX2009
Unit Name : SW PCB Unit

A

Unit Number : CWN8784(A)
Unit Number : CWN8782(B)
Unit Number : CWN8783(C)
Unit Number : CWN8785(D)
Unit Number : CWN8787(E)
Unit Number : CWN8786(F)
Unit Number : CWN8788(G)
Unit Name : Mother Unit

MISCELLANEOUS

IC 101	(B,165,22) Regulator IC	NJW4181U3-33B
IC 111	(A,82,110) Regulator IC	NJW4184DL3-08A
IC 141	(B,162,30) Regulator IC	MM3479A33P
IC 160	(A,157,26) Regulator IC	RP132J001B-AE
IC 211	(B,40,109) IC	BA00DD0WHFP
IC 231	(B,159,37) Regulator IC	MM1856A50N
IC 241	(B,105,24) Regulator IC	MM3479A18P
IC 271	(A,76,91) Regulator IC	MM1856A58N
IC 301	(B,149,76) IC	AN33012UA
IC 351	(B,129,51) DC/DC CONV IC	KBD9876EFJ
IC 401	(A,134,28) Flash Blank UC IC	MN103LF15RXW
IC 601	(A,91,65) AS IC	MN1AA9010Z
IC 603	(B,160,99) And Logic IC	MC74VHC1GT08DFG
IC 851	(B,81,50) RAM IC	M12L2561616A-5TG2S
IC 871	(B,109,55)Serial Flash Memory IC	MX25L1606EM2I-12G
IC 881	(B,111,65) FLASH Memory IC	S99-50389P
IC 891	(B,113,44) IC	337S3959
IC 901	(A,107,35) IC	AK8814VQ
IC 1101	(B,116,105) IC	AK4223VQ
IC 1201	(B,51,86) AUD DSP SYS LSI	PM9014A

Circuit Symbol and No.		Part No.
IC 1271	(B,75,108) OP AMP IC	NJW1240V
IC 1301	(A,31,134) Power AMP IC	PA2032A
IC 2004	(B,59,33) Regulator IC	MM3479A33P
IC 2201	(A,39,24) Tuner IC	TEF6686HN
IC 2401	(B,146,102) DC/DC CONV IC	AN33014UA
IC 2551	(B,34,44) Logic IC	TC7SZ32FUS1
IC 2601	(A,58,77) Interface IC	BU8254KVT
IC 3001	(A,18,79) Logic IC	74VHCT08AFT
IC 3101	(B,155,119) Interface IC	STCC2540IQ
IC 3221	(A,141,118) Comparator IC	TC75S57FU
IC 3231	(A,145,124) V AMP IC	BH7673G
IC 3232	(A,148,124) V AMP IC	BH7673G
IC 3233	(A,152,124) V AMP IC	BH7673G
IC 3234	(A,155,124) V AMP IC	BH7673G
Q 11	(A,107,141) Chip Transistor	HN1C01FU
Q 21	(B,93,124) Resistor Built-IN TR	LTC014EEB
Q 31	(B,73,153) Resistor Built-IN TR	LTC014EEB
Q 51	(B,93,141) Bipolar TR	LSAR523UB
Q 61	(B,93,146) Bipolar TR	LSAR523UB
Q 131	(B,30,111) Transistor	2SAR293PGZE
Q 136	(B,25,111) Bipolar TR	LSCR523UB
Q 221	(B,24,84) Transistor	UMF5N
Q 301	(A,154,78) Power MOS FET	ATP112-H
Q 302	(A,143,75) Power MOS FET	ATP112-H
Q 401	(B,132,23) Bipolar TR	LSCR523UB
Q 402	(B,129,28) Chip Transistor(D,E,F,G)	RN4982
Q 403	(B,132,28) Chip Transistor(D,E,F,G)	RN4982
Q 404	(B,134,33) Chip Transistor(D,E,F,G)	RN4982
Q 405	(B,131,33) Chip Transistor(D,E,F,G)	RN4982
Q 821	(A,117,72) Bipolar TR	LSCR523UB
Q 892	(B,105,46) Bipolar TR	LSAR523UB
Q 931	(A,121,64) Bipolar TR	LSCR523UB
Q 932	(A,119,67) Bipolar TR	LSCR523UB
Q 933	(A,118,69) Bipolar TR	LSCR523UB
Q 1271	(A,75,103) Resistor Built-IN TR	LTC014EEB
Q 1301	(B,27,120) Chip Transistor	RN1903
Q 1303	(B,31,117) Bipolar TR	LSCR523UB
Q 3091	(A,98,112) Chip Transistor	2SD2114K
Q 3092	(A,92,111) Transistor	RN4984
Q 3093	(A,94,111) Transistor	RN4984
Q 3141	(A,135,122) Chip Transistor	HN1B04FU
D 1	(B,77,150) Diode	1SR154-400
D 2	(B,77,153) Diode	1SR154-400
D 3	(A,136,92) Diode	RB080L-30
D 11	(A,101,142) Diode	DZ2J062M0
D 12	(A,98,138) Diode	DZ2J068M0
D 21	(B,90,123) Diode	DA2J101
D 32	(B,71,153) Diode	DZ2J056M0
D 41	(B,49,118) Diode	CRG03
D 51	(B,89,140) Diode	DA2J101
D 61	(B,89,147) Diode	DA2J101
D 101	(A,159,41) Diode	D1F60-5053
D 211	(B,54,112) Diode	1SR154-400
D 301	(A,153,71) Diode	RB056L-40
D 302	(A,143,67) Diode	RB056L-40
D 351	(A,134,50) Diode	RB056L-40
D 401	(A,120,16) Diode	DB2J31400
D 403	(B,124,26) Diode	DB2J31400
D 1301	(B,24,116) Diode	DA2J101
D 1302	(B,35,119) Diode	DZ2J082M0

Circuit Symbol and No.		Part No.
D 2201	(A,11,34) Diode	EZAEG2A50AX
D 2202	(A,18,25) Diode	EZAEG2A50AX
D 2203	(A,27,18) Diode	EZAEG2A50AX
D 2204	(A,44,24) Diode	DZ2S068C
D 2401	(B,141,104) Diode	RB060M-30
D 2402	(B,144,113) Diode	1SR154-400
D 3052	(B,100,119) Diode	DZ2S180C
D 3053	(B,106,121) Diode	DZ2S180C
D 3054	(B,106,124) Diode	DZ2S180C
D 3055	(B,105,125) Diode	DZ2S180C
D 3056	(B,106,128) Diode	DZ2S180C
D 3057	(B,99,128) Diode	DZ2S180C
D 3058	(B,100,125) Diode	DZ2S180C
D 3091	(A,90,113) Diode	DZ2J039M0
D 3101	(A,164,123) Diode	EZAEG2A50AX
D 3102	(A,166,123) Diode	EZAEG2A50AX
D 3271	(A,116,127) Diode	DZ2S068C
D 3272	(A,115,127) Diode	DZ2S068C
L 1	(A,89,133) Choke Coil 600 uH	CTH1221
L 2	(A,144,89) Choke Coil 10 uH	CTH1486
L 301	(A,155,62) Choke Coil 7 uH	CTH1381
L 302	(A,142,60) SMD SPL Inductor	CTH1519
L 351	(A,134,56) SMD SPL Inductor	CTH1524
L 700	(A,76,80) Chip Beads	VTL1127
L 701	(A,73,77) Chip Beads	VTL1126
L 702	(A,71,77) Chip Beads	VTL1126
L 703	(A,73,76) Chip Beads	VTL1126
L 704	(A,71,75) Chip Beads	VTL1126
L 705	(A,73,75) Chip Beads	VTL1126
L 706	(A,71,74) Chip Beads	VTL1126
L 707	(A,73,74) Chip Beads	VTL1126
L 708	(A,71,73) Chip Beads	VTL1126
L 709	(A,73,72) Chip Beads	VTL1126
L 710	(A,71,72) Chip Beads	VTL1126
L 711	(A,73,71) Chip Beads	VTL1126
L 712	(A,71,71) Chip Beads	VTL1126
L 713	(A,73,70) Chip Beads	VTL1126
L 714	(A,71,69) Chip Beads	VTL1126
L 715	(A,73,69) Chip Beads	VTL1126
L 716	(A,71,68) Chip Beads	VTL1126
L 717	(A,73,68) Chip Beads	VTL1126
L 718	(A,71,67) Chip Beads	VTL1126
L 719	(A,73,66) Chip Beads	VTL1126
L 750	(A,79,45) Chip Beads	VTL1128
L 851	(B,70,60) Inductor	CTF1786
L 852	(A,81,44) Chip Beads	VTL1128
L 871	(B,102,58) Inductor	CTF1786
L 881	(B,104,59) Inductor	CTF1786
L 882	(A,110,62) Inductor	CTF1740
L 901	(A,114,38) Inductor	ATL7039
L 902	(B,115,37) Inductor	ATL7039
L 903	(A,108,57) Chip Beads	VTL1126
L 904	(A,99,44) Chip Beads	VTL1126
L 905	(A,99,46) Chip Beads	VTL1126
L 906	(A,98,44) Chip Beads	VTL1126
L 907	(A,97,46) Chip Beads	VTL1126
L 908	(A,97,44) Chip Beads	VTL1126
L 909	(A,96,46) Chip Beads	VTL1126
L 910	(A,96,44) Chip Beads	VTL1126

Circuit Symbol and No.		Part No.
L 911	(A,95,43) Chip Beads	VTL1126
L 1201	(B,60,86) Ferrite Bead	CTF1528
L 1202	(B,43,86) Ferrite Bead	CTF1528
L 2201	(A,45,32) Inductor	CTF1749
L 2202	(A,49,27) Inductor	CTF1786
L 2203	(A,30,17) Inductor	LCYC150K1608
L 2204	(A,25,17) Inductor	CTF1389
L 2205	(A,20,25) Inductor	LCMAR27J1608
L 2207	(A,23,24) Chip Coil	LCTAWR22J2520
L 2401	(A,141,102) SMD SPL Inductor	CTH1524
L 2402	(B,141,100) Inductor	CTF1793
L 2601	(B,52,60) Chip Ferrite Bead	BTX1047
L 2602	(A,55,87) Chip Solid Inductor	XTL3010
L 2603	(B,54,68) Chip Solid Inductor	XTL3010
L 3101	(B,162,121) Coil	ATH7015
L 3231	(A,155,117) Inductor	ATL7015
L 3236	(A,106,136) Ferrite Bead	CTF1528
L 3237	(A,99,136) Ferrite Bead	CTF1528
L 3238	(A,107,132) Ferrite Bead	CTF1528
L 3239	(A,98,132) Ferrite Bead	CTF1528
L 3240	(A,107,130) Ferrite Bead	CTF1528
L 3241	(A,97,130) Ferrite Bead	CTF1528
L 3242	(A,107,127) Ferrite Bead	CTF1528
L 3243	(A,97,127) Ferrite Bead	CTF1528
L 3244	(A,107,126) Ferrite Bead	CTF1528
L 3245	(A,98,126) Ferrite Bead	CTF1528
L 3246	(A,107,125) Ferrite Bead	CTF1528
L 3247	(A,98,124) Ferrite Bead	CTF1528
L 3248	(A,98,123) Ferrite Bead	CTF1528
L 3249	(A,107,123) Ferrite Bead	CTF1528
L 3250	(A,98,122) Ferrite Bead	CTF1528
L 3251	(A,107,122) Ferrite Bead	CTF1528
L 3252	(A,107,121) Ferrite Bead	CTF1528
L 3253	(A,99,119) Ferrite Bead	CTF1528
L 3271	(A,115,124) Chip Beads	VTL1126
L 3272	(A,116,124) Chip Beads	VTL1126
X 401	(A,135,13) Crystal Resonator 12.500 MHz	CSS1839
X 601	(A,110,79) Resonator 24 MHz	CSS1773
X 2201	(A,38,34) Crystal Resonator 9.216 MHz	CSS1867
⚠ P131	(A,12,111) Fuse 0.75 A	CEK1380
P 2201	(A,11,36) Variable Coil	IMSA-6803-01Y900
⚠ P3001	(A,37,89) Fuse 0.75 A	CEK1380
P 3052	(A,96,117) Poly Switch	FSMD075-24R
P 3054	(A,110,127) Poly Switch	FSMD075-24R
P 3055	(B,136,127) Poly Switch	FSMD075-24R
P 3281	(A,132,127) Poly Switch	FSMD075-24R
CN131	(A,13,105) Connector	CKS4822
CN2201	(A,7,85) Clamper	CEF1046
CN2551	(A,24,57) Connector	CKS6025
CN2901	(A,91,26) B TO B Connector	CKS6346
CN3001	(A,34,93) FFC/FPC Connector	CKS6672
CN3051	(A,102,127) Plug	CKM1599
CN3121	(B,120,19) FFC/FPC Connector	CKS6638
CN3141	(A,147,138) Connector	CKS4497
CN3201	(A,122,109) FFC/FPC Connector(F)	CKS4497
JA1	(A,65,147) Connector	CKM1613
JA3101	(A,165,127) USB Jack	CKN1097
JA3271	(A,117,139) Jack	CKN1101
JA3281	(A,128,138) 3.5 DIA Jack	CKS6437
VL2201	(A,29,24) Variable Coil	CTC1216

Circuit Symbol and No.		Part No.
RESISTORS		
R 11	(A,104,142)	RS1/16SS103J
R 12	(A,104,141)	RS1/16SS473J
R 13	(A,98,142)	RS1/16SS472J
R 16	(A,103,138)	RS1/16SS104J
R 17	(A,102,138)	RS1/16SS473J
R 18	(A,89,147)	RS1/4SA102J
R 21	(B,91,122)	RS1/16SS103J
R 22	(B,87,122)	RS1/16SS472J
R 23	(B,85,122)	RS1/4SA102J
R 31	(B,69,150)	RS1/4SA102J
R 32	(B,69,154)	RS1/16SS103J
R 51	(B,96,140)	RS1/16SS102J
R 52	(B,94,140)	RS1/16SS473J
R 53	(B,91,143)	RS1/16SS223J
R 54	(B,88,143)	RS1/16SS103J
R 61	(B,93,148)	RS1/16SS223J
R 62	(B,95,142)	RS1/16SS102J
R 63	(B,94,142)	RS1/16SS473J
R 64	(B,88,144)	RS1/16SS103J
R 131	(B,23,112)	RS1/16SS273J
R 132	(B,25,108)	RS1/8SQ122J
R 133	(B,22,111)	RS1/16SS272J
R 139	(B,33,111)	RS1/16SS102J
R 160	(A,154,35)	RS1/16SS5601D
R 161	(A,153,33)	RS1/16SS1202D
R 211	(B,48,107)	RS1/16SS2201D
R 212	(B,49,106)	RS1/16SS2702D
R 213	(B,50,106)	RS1/16SS4701D
R 221	(B,24,81)	RS1/16SS473J
R 222	(B,23,82)	RS1/16SS102J
R 301	(B,140,74)	RS1/16SS561J
R 302	(B,141,75)	RS1/16SS3302D
R 303	(B,141,73)	RS1/16SS4301D
R 304	(B,141,72)	RS1/16SS3601D
R 305	(B,141,76)	RS1/16SS273J
R 306	(B,153,71)	RS1/16SS103J
R 308	(B,151,82) 11 mohm	CCN1341
R 309	(B,151,71)	RS1/16SS204J
R 310	(B,152,71)	RS1/16SS394J
R 311	(B,142,81) 12 mohm	CCN1321
R 312	(B,147,71)	RS1/16SS224J
R 313	(B,156,75)	RS1/16SS472J
R 314	(B,156,72)	RS1/16SS1101D
R 315	(B,158,72)	RS1/16SS3000D
R 316	(B,156,74)	RS1/16SS1002D
R 317	(B,157,73)	RS1/16SS511J
R 322	(B,149,71)	RS1/16SS473J
R 323	(B,155,71)	RS1/16SS473J
R 351	(B,122,49)	RS1/16SS4701D
R 352	(B,124,49)	RS1/16SS4702D
R 353	(B,124,48)	RS1/16SS2202D
R 354	(B,123,48)	RS1/16SS332J
R 360	(A,120,56)	RS1/8SQ331J
R 401	(A,122,16)	RS1/16SS472J
R 402	(A,123,17)	RS1/16SS102J
R 403	(A,122,15)	RS1/16SS103J
R 405	(A,126,15)	RS1/16SS471J
R 406	(A,128,15)	RS1/16SS473J

Circuit Symbol and No.		Part No.
R 407	(A,127,15)	RS1/16SS471J
R 408	(B,130,21)	RS1/16SS473J
R 409	(A,118,25)	RS1/16SS105J
R 410	(A,121,24)	RS1/16SS471J
R 411	(A,131,9)	RS1/16SS472J
R 412	(A,131,10)	RS1/16SS472J
R 413	(B,145,33)	RS1/16SS473J
R 414	(B,133,25)	RS1/16SS473J
R 415	(B,130,15)	RS1/16SS473J
R 417	(B,133,18)	RS1/16SS104J
R 418	(B,134,18)	RS1/16SS102J
R 419	(A,135,15)	RS1/16SS0R0J
R 420	(B,136,24)	RS1/16SS102J
R 421	(B,137,26)	RS1/16SS104J
R 422	(A,141,15)	RS1/16SS473J
R 423	(B,139,17)	RS1/16SS473J
R 424	(A,141,13)	RS1/16SS121J
R 425	(A,142,15)	RS1/16SS104J
R 426	(A,142,14)	RS1/16SS121J
R 430	(A,151,20)	RS1/16SS102J
R 431	(A,150,21)	RS1/16SS473J
R 433	(A,147,23) (F)	RS1/16SS104J
R 435	(B,144,16)	RS1/16SS473J
R 436	(A,151,32)	RS1/16SS182J
R 437	(A,147,24)	RS1/16SS0R0J
R 439	(A,151,30)	RS1/16SS182J
R 440	(A,147,31)	RS1/16SS104J
R 441	(A,147,25)	RS1/16SS0R0J
R 442	(A,147,28) (F)	RS1/16SS471J
R 443	(A,147,29) (F)	RS1/16SS471J
R 444	(A,150,28) (F)	RS1/16SS473J
R 445	(A,147,32)	RS1/16SS104J
R 447	(B,126,27) (A,B,C)	RS1/16SS102J
	(B,126,27) (D,E,F,G)	RS1/16SS1001D
R 448	(B,126,28) (D,E,F,G)	RS1/16SS6800D
R 450	(A,130,14)	RS1/16SS0R0J
R 453	(A,148,33)	RS1/16SS101J
R 457	(A,144,42)	RS1/16SS822J
R 458	(A,143,41)	RS1/16SS471J
R 460	(A,139,43)	RS1/16SS473J
R 463	(B,135,39)	RS1/16SS104J
R 464	(B,134,39)	RS1/16SS473J
R 465	(A,137,42)	RS1/16SS473J
R 466	(A,147,26)	RS1/16SS222J
R 467	(A,130,43)	RS1/16SS104J
R 468	(B,132,39)	RS1/16SS473J
R 471	(B,130,36)	RS1/16SS221J
R 472	(B,129,36)	RS1/16SS221J
R 474	(B,128,36)	RS1/16SS221J
R 475	(A,126,42)	RS1/16SS221J
R 476	(A,125,42)	RS1/16SS221J
R 477	(B,127,39)	RS1/16SS104J
R 478	(A,124,41)	RS1/16SS221J
R 479	(A,124,40)	RS1/16SS104J
R 480	(A,119,40) (F,G)	RS1/16SS104J
R 481	(A,121,40) (B,C,D,E)	RS1/16SS104J
R 482	(A,118,39) (D,E,F)	RS1/16SS104J
R 483	(A,120,39) (B,C,G)	RS1/16SS104J
R 484	(A,117,38) (C,E,F)	RS1/16SS104J
R 485	(A,119,38) (B,D,G)	RS1/16SS104J

Circuit Symbol and No.		Part No.
R 486	(A,117,37)	RS1/16SS104J
R 493	(A,118,34)	RS1/16SS103J
R 494	(A,121,33)	RS1/16SS221J
R 495	(B,126,30)	RS1/16SS104J
R 496	(A,118,32)	RS1/16SS103J
R 497	(A,121,32)	RS1/16SS221J
R 499	(B,123,30)	RS1/16SS104J
R 500	(B,123,29)	RS1/16SS104J
R 501	(A,121,30)	RS1/16SS101J
R 502	(A,121,28)	RS1/16SS221J
R 503	(A,121,27)	RS1/16SS221J
R 504	(A,121,25)	RS1/16SS221J
R 506	(A,131,41)	RS1/16SS0R0J
R 507	(A,118,30)	RS1/16SS473J
R 508	(B,123,28)	RS1/16SS103J
R 509	(A,121,26)	RS1/16SS104J
R 510	(A,121,37)	RS1/16SS473J
R 511	(B,115,27)	RS1/16SS471J
R 512	(B,115,26)	RS1/16SS472J
R 513	(B,115,24)	RS1/16SS471J
R 514	(B,115,25)	RS1/16SS472J
R 515	(B,127,21)	RS1/16SS221J
R 518	(A,148,18)	RS1/16SS0R0J
R 519	(B,130,25) (D,E,F,G)	RS1/16SS6800D
R 524	(B,130,31) (D,E,F,G)	RS1/16SS8201D
R 525	(B,129,33) (D,E,F,G)	RS1/16SS8201D
R 526	(B,129,25) (A,B,C)	RS1/16SS102J
	(B,129,25) (D,E,F,G)	RS1/16SS1001D
R 602	(B,117,51)	RS1/10SR0R0J
R 603	(A,107,51)	RS1/16SS473J
R 605	(A,108,50)	RS1/16SS473J
R 611	(A,112,54) (F)	RS1/16SS0R0J
R 612	(A,112,56) (F)	RS1/16SS0R0J
R 613	(A,112,55) (F)	RS1/16SS473J
R 616	(B,100,57)	RS1/16SS473J
R 619	(B,109,73)	RS1/16SS0R0J
R 620	(B,103,68)	RS1/16SS1R0J
R 621	(B,100,72)	RS1/16SS1R0J
R 622	(A,109,73)	RS1/16SS0R0J
R 623	(A,110,75)	RS1/16SS0R0J
R 625	(B,104,77)	RS1/16SS473J
R 627	(B,105,77)	RS1/16SS473J
R 628	(B,107,75)	RS1/16SS0R0J
R 629	(A,108,78)	RS1/16SS105J
R 630	(A,110,77)	RS1/16SS102J
R 631	(A,111,85)	RS1/16SS102J
R 632	(A,105,84)	RS1/16SS0R0J
R 633	(A,103,84)	RS1/16SS0R0J
R 636	(A,111,87)	RS1/16SS104J
R 637	(A,107,84)	RS1/16SS473J
R 639	(A,106,84)	RS1/16SS473J
R 641	(B,102,79)	RS1/16SS103J
R 642	(B,102,82)	RS1/16SS103J
R 643	(A,98,84)	RS1/16SS4701D
R 644	(A,97,85)	RS1/16SS1201D
R 645	(A,97,86)	RS1/16SS0R0J
R 646	(B,161,95)	RS1/16SS0R0J
R 651	(B,93,74)	RS1/16SS0R0J
R 653	(B,95,72)	RS1/16SS101J
R 654	(B,94,72)	RS1/16SS101J

Circuit Symbol and No.		Part No.	Circuit Symbol and No.		Part No.
R 685	(B,119,56)	RS1/10SR0R0J	R 860	(B,85,42)	RS1/16SS181J
R 686	(B,162,97)	RS1/16SS473J	R 861	(B,81,60)	RS1/16SS101J
R 687	(B,159,101)	RS1/16SS103J	R 862	(B,87,42)	RAB4CQ181J
R 688	(B,161,101)	RS1/16SS473J	R 863	(B,90,42)	RAB4CQ181J
R 701	(A,73,80)	RS1/16SS241J	R 872	(A,111,60)	RS1/16SS0R0J
R 703	(A,75,78)	RS1/16SS473J	R 873	(A,112,58)	RS1/16SS0R0J
R 704	(A,70,77)	RS1/16SS271J	R 877	(B,103,54)	RS1/16SS101J
R 705	(A,68,77)	RS1/16SS271J	R 878	(B,103,53)	RS1/16SS101J
R 706	(A,70,76)	RS1/16SS271J	R 882	(B,104,61)	RS1/16SS101J
R 707	(A,68,75)	RS1/16SS271J	R 883	(B,104,62)	RS1/16SS0R0J
R 708	(A,70,75)	RS1/16SS271J	R 884	(B,104,65)	RS1/16SS101J
R 709	(A,68,74)	RS1/16SS271J	R 885	(B,104,66)	RS1/16SS101J
R 710	(A,70,74)	RS1/16SS271J	R 886	(A,111,62)	RS1/16SS271J
R 711	(A,68,73)	RS1/16SS271J	R 887	(A,110,63)	RS1/16SS101J
R 712	(A,70,72)	RS1/16SS271J	R 888	(B,118,67)	RS1/16SS101J
R 713	(A,68,72)	RS1/16SS271J	R 892	(B,102,47)	RS1/16SS473J
R 714	(A,70,71)	RS1/16SS271J	R 893	(B,104,43)	RS1/16SS183J
R 715	(A,68,71)	RS1/16SS271J	R 895	(B,116,45)	RS1/16SS222J
R 716	(A,70,70)	RS1/16SS271J	R 896	(B,110,42)	RS1/16SS222J
R 717	(A,68,69)	RS1/16SS271J	R 897	(B,108,44)	RS1/16SS220J
R 718	(A,70,69)	RS1/16SS271J	R 898	(B,110,44)	RS1/16SS222J
R 719	(A,68,68)	RS1/16SS271J	R 902	(A,110,57)	RS1/16SS820J
R 720	(A,70,68)	RS1/16SS271J	R 904	(A,102,40)	RS1/16SS103J
R 721	(A,68,67)	RS1/16SS271J	R 906	(A,99,41)	RS1/16SS561J
R 726	(A,70,64)	RS1/16SS0R0J	R 908	(A,99,43)	RS1/16SS561J
R 727	(A,72,63)	RS1/16SS0R0J	R 910	(A,98,41)	RS1/16SS561J
R 729	(A,70,66)	RS1/16SS271J	R 912	(A,97,43)	RS1/16SS561J
R 736	(B,82,63)	RS1/16SS472J	R 914	(A,97,41)	RS1/16SS561J
R 739	(A,80,45)	RS1/16SS330J	R 916	(A,96,43)	RS1/16SS561J
R 741	(A,73,64)	RS1/16SS0R0J	R 918	(A,96,41)	RS1/16SS561J
R 792	(A,81,46)	RS1/16SS330J	R 920	(A,95,41)	RS1/16SS561J
R 793	(A,79,41)	RS1/16SS472J	R 921	(A,104,30)	RS1/16SS103J
R 794	(B,82,61)	RS1/16SS472J	R 922	(A,104,29)	RS1/16SS271J
R 795	(B,83,61)	RS1/16SS472J	R 923	(A,104,28)	RS1/16SS271J
R 797	(B,84,61)	RS1/16SS472J	R 924	(A,107,28)	RS1/16SS181J
R 798	(B,85,61)	RS1/16SS472J	R 925	(A,106,28)	RS1/16SS103J
R 805	(A,92,40)	RS1/16SS473J	R 926	(A,107,29)	RS1/16SS103J
R 806	(A,94,46)	RS1/16SS473J	R 930	(A,114,30)	RS1/10SR0R0J
R 813	(B,102,46)	RS1/16SS472J	R 931	(A,115,35)	RS1/16SS6801D
R 814	(A,102,45)	RS1/16SS0R0J	R 932	(B,107,39)	RS1/16SS104J
R 815	(A,103,43)	RS1/16SS473J	R 933	(B,106,39)	RS1/16SS104J
R 816	(A,103,45)	RS1/16SS0R0J	R 934	(A,112,28)	RS1/16SS0R0J
R 821	(A,117,74)	RS1/16SS103J	R 935	(A,127,64)	RS1/16SS0R0J
R 822	(A,120,73)	RS1/16SS0R0J	R 936	(A,127,66)	RS1/16SS0R0J
R 823	(A,123,75)	RS1/16SS104J	R 937	(A,125,71)	RS1/16SS0R0J
R 824	(A,120,75)	RS1/16SS153J	R 938	(B,120,62)	RS1/16SS0R0J
R 825	(A,115,73)	RS1/16SS471J	R 941	(A,117,65)	RS1/16SS471J
R 827	(B,95,60)	RS1/16SS0R0J	R 944	(A,117,67)	RS1/16SS471J
R 828	(B,94,54)	RS1/16SS0R0J	R 947	(A,116,69)	RS1/16SS471J
R 829	(A,117,75)	RS1/16SS0R0J	R 950	(A,114,64)	RS1/16SS0R0J
R 841	(B,136,29)	RAB4CQ103J	R 951	(A,114,66)	RS1/16SS0R0J
R 851	(B,75,60)	RAB4CQ101J	R 952	(A,113,69)	RS1/16SS0R0J
R 852	(B,79,60)	RAB4CQ101J	R 960	(A,117,41)	RS1/16SS0R0J
R 853	(B,83,58)	RAB4CQ181J	R 970	(A,102,31)	RS1/16SS222J
R 854	(B,86,58)	RAB4CQ181J	R 971	(A,102,28)	RS1/16SS222J
R 855	(B,90,58)	RAB4CQ181J	R 1111	(B,122,96) (F)	RS1/16SS75R0D
R 856	(B,73,42)	RAB4CQ101J	R 1112	(B,120,93)	RS1/16SS75R0D
R 857	(B,78,42)	RAB4CQ101J	R 1113	(B,118,93)	RS1/16SS75R0D
R 858	(B,80,41)	RS1/16SS121J	R 1114	(B,116,95)	RS1/16SS104J
R 859	(B,84,42)	RS1/16SS181J	R 1115	(B,114,94)	RS1/16SS75R0D

Circuit Symbol and No.		Part No.
R 1116	(B,112,94)	RS1/16SS2200D
R 1117	(B,110,101)	RS1/16SS0R0J
R 1118	(B,111,99)	RS1/16SS75R0D
R 1119	(B,115,95)	RS1/16SS101J
R 1120	(B,114,95)	RS1/16SS101J
R 1121	(B,117,90)	RS1/16SS0R0J
R 1122	(B,118,94)	RS1/16SS101J
R 1123	(B,117,94)	RS1/16SS101J
R 1124	(B,120,95)	RS1/16SS101J
R 1125	(B,119,95)	RS1/16SS101J
R 1131	(B,126,106)	RS1/16SS101J
R 1132	(B,126,108)	RS1/16SS101J
R 1133	(B,126,109)	RS1/16SS101J
R 1134	(B,118,114)	RS1/16SS101J
R 1135	(B,117,114)	RS1/16SS101J
R 1136	(B,115,114)	RS1/16SS101J
R 1141	(B,122,100) (C,D,E,G)	RS1/16SS0R0J
R 1142	(B,112,95)	RS1/10SR0R0J
R 1143	(B,110,100)	RS1/16SS470J
R 1144	(B,122,98) (C,D,E,G)	RS1/16SS104J
R 1145	(B,122,97) (C,D,E,G)	RS1/16SS101J
R 1146	(B,123,98) (F)	RS1/16SS0R0J
R 1147	(B,120,97) (F)	RS1/16SS0R0J
R 1148	(B,120,99) (A,B)	RS1/16SS0R0J
R 1149	(B,122,101) (A,B)	RS1/16SS0R0J
R 1214	(B,49,100)	RS1/16SS0R0J
R 1215	(B,50,101)	RS1/16SS0R0J
R 1228	(B,53,78)	RS1/16SS0R0J
R 1271	(A,73,104)	RS1/16SS103J
R 1272	(B,70,110)	RS1/16SS684J
R 1286	(B,64,110)	RS1/16SS100J
R 1287	(B,68,109)	RS1/16SS102J
R 1301	(B,25,117)	RS1/16SS683J
R 1302	(B,25,119)	RS1/16SS683J
R 1303	(B,29,121)	RS1/16SS152J
R 1304	(B,29,122)	RS1/16SS101J
R 1306	(B,23,120)	RS1/16SS103J
R 1308	(B,27,117)	RS1/16SS103J
R 1309	(B,34,117)	RS1/16SS104J
R 1310	(B,35,117)	RS1/16SS473J
R 1314	(B,19,120)	RS1/16SS473J
R 1315	(B,17,118)	RS1/16SS102J
R 1316	(B,21,120)	RS1/16SS0R0J
R 2009	(B,57,36)	RS1/16SS102J
R 2204	(A,41,30)	RS1/16SS103J
R 2206	(A,41,29)	RS1/16SS103J
R 2207	(A,45,29)	RS1/16SS272J
R 2208	(A,46,28)	RS1/16SS272J
R 2209	(A,42,27)	RS1/16SS0R0J
R 2210	(A,43,26)	RS1/16SS0R0J
R 2212	(A,30,15)	RS1/16SS391J
R 2213	(A,20,18)	RS1/16SS105J
R 2214	(A,23,18)	RS1/16SS105J
R 2242	(B,40,31)	RS1/16SS0R0J
R 2243	(A,34,24)	RS1/16SS0R0J
R 2244	(A,34,23)	RS1/16SS0R0J
R 2401	(B,150,109)	RS1/16SS752J
R 2402	(A,154,110)	RS1/16SS102J
R 2403	(A,154,111)	RS1/16SS102J
R 2404	(A,154,108)	RS1/16SS102J

Circuit Symbol and No.		Part No.
R 2405	(B,152,96)	RS1/16SS224J
R 2406	(B,147,94)	RS1/16SS1202D
R 2407	(B,154,108)	RS1/16SS152J
R 2408	(B,154,107)	RS1/16SS3302D
R 2409	(B,151,104)	RS1/16SS8201D
R 2410	(A,154,109)	RS1/16SS102J
R 2413	(B,146,94)	RS1/16SS394J
R 2414	(B,145,96)	RS1/16SS204J
R 2416	(B,147,96)	RS1/16SS0R0J
R 2420	(B,149,95)	RS1/16SS104J
R 2421	(A,150,105) 0.039 ohm	CCN1325
R 2552	(B,23,47)	RS1/10SR0R0J
R 2556	(B,23,49)	RS1/10SR0R0J
R 2557	(B,23,46)	RS1/10SR0R0J
R 2560	(B,23,45)	RS1/10SR0R0J
R 2564	(B,25,65)	RS1/16SS471J
R 2565	(B,28,64)	RS1/16SS102J
R 2566	(B,28,63)	RS1/16SS221J
R 2567	(B,28,62)	RS1/16SS221J
R 2568	(B,25,61)	RS1/16SS221J
R 2569	(B,25,60)	RS1/16SS221J
R 2571	(B,26,56)	RS1/16SS0R0J
R 2572	(B,29,52)	RS1/8SQ221J
R 2601	(A,67,79)	RS1/16SS0R0J
R 2602	(A,66,80)	RS1/16SS0R0J
R 2607	(B,52,68)	RS1/16SS153J
R 2609	(B,64,76)	RS1/16SS473J
R 2901	(B,90,29)	RS1/16SS102J
R 2906	(B,87,22)	RS1/16SS101J
R 2908	(B,85,27)	RS1/16SS102J
R 2912	(A,97,21)	RS1/16SS271J
R 2913	(A,96,22)	RS1/16SS271J
R 2915	(A,96,24)	RS1/16SS271J
R 2917	(A,97,26)	RS1/16SS0R0J
R 2918	(A,98,29)	RS1/16SS222J
R 2919	(A,98,26)	RS1/16SS0R0J
R 2920	(A,96,31)	RS1/16SS102J
R 2921	(A,96,32)	RS1/16SS102J
R 3004	(A,26,83)	RS1/16SS0R0J
R 3059	(B,103,132)	RS1/16SS223J
R 3060	(B,106,133)	RS1/16SS223J
R 3061	(B,103,130)	RS1/16SS223J
R 3062	(B,108,129)	RS1/16SS223J
R 3063	(A,107,138)	RS1/16SS223J
R 3064	(A,107,136)	RS1/16SS223J
R 3071	(B,109,127)	RS1/16SS223J
R 3072	(B,107,126)	RS1/16SS223J
R 3073	(B,107,123)	RS1/16SS223J
R 3074	(B,107,121)	RS1/16SS223J
R 3076	(B,94,121)	RS1/10SR0R0J
R 3091	(A,97,109)	RS1/16SS152J
R 3092	(A,96,112)	RS1/16SS103J
R 3093	(A,89,110)	RS1/16SS122J
R 3105	(B,152,118)	RS1/16SS102J
R 3106	(B,152,122)	RS1/16SS103J
R 3107	(B,152,120)	RS1/16SS103J
R 3108	(B,152,119)	RS1/16SS103J
R 3109	(B,158,118)	RS1/16SS2402D
R 3122	(B,117,24)	RS1/16SS272J
R 3141	(B,153,134)	RAB4CQ750J

Circuit Symbol and No.		Part No.
R 3142	(A,138,123)	RS1/16SS562J
R 3143	(A,138,121)	RS1/16SS332J
R 3144	(A,133,122)	RS1/16SS103J
R 3145	(A,131,122)	RS1/16SS103J
R 3146	(A,132,121)	RS1/10SR222J
R 3147	(B,121,124)	RS1/16SS223J
R 3148	(B,120,123)	RS1/16SS223J
R 3149	(B,120,121)	RS1/16SS562J
R 3150	(A,144,128)	RS1/16SS102J
R 3151	(A,140,128)	RS1/16SS102J
R 3152	(A,137,128)	RS1/16SS471J
R 3153	(A,135,128)	RS1/16SS471J
R 3157	(B,121,121)	RS1/16SS272J
R 3158	(B,121,120)	RS1/16SS272J
R 3168	(B,152,128)	RS1/16SS103J
R 3204	(A,119,98) (F)	RS1/16SS473J
R 3205	(A,129,102) (F)	RS1/16SS101J
R 3207	(A,124,98) (F)	RS1/16SS0R0J
R 3211	(A,121,101) (F)	RS1/16SS0R0J
R 3212	(A,119,97) (F)	RS1/16SS0R0J
R 3213	(A,116,100) (F)	RS1/16SS0R0J
R 3214	(A,116,101) (F)	RS1/16SS0R0J
R 3217	(A,117,101) (F)	RS1/16SS473J
R 3221	(A,145,118)	RS1/16SS0R0J
R 3222	(A,140,123)	RS1/16SS271J
R 3223	(A,140,122)	RS1/16SS684J
R 3224	(A,143,118)	RS1/16SS1802D
R 3225	(A,142,120)	RS1/16SS1302D
R 3226	(A,139,118)	RS1/16SS682J
R 3227	(A,139,120)	RS1/16SS103J
R 3229	(B,149,129)	RS1/16SS0R0J
R 3231	(A,154,121)	RS1/16SS101J
R 3232	(A,151,121)	RS1/16SS101J
R 3233	(A,147,121)	RS1/16SS101J
R 3289	(A,109,132)	RS1/10SR0R0J
R 3300	(A,97,121)	RS1/10SR0R0J

CAPACITORS

C 1	(B,73,151)	CKSRYB104K50
C 4	(A,169,69) 3300 u/16 V	CCH2027
C 5	(B,160,87) 10 uF	CCG1236
C 6	(B,158,87)	CKSSYB102K50
C 9	(A,169,65)	XCEAT102M16
C 12	(B,60,149)	CCSSCH102J50
C 13	(B,55,132)	CCSSCH102J50
C 14	(B,58,149)	CCSSCH102J50
C 15	(B,54,132)	CCSSCH102J50
C 16	(B,55,149)	CCSSCH102J50
C 17	(B,53,132)	CCSSCH102J50
C 18	(B,53,149)	CCSSCH102J50
C 19	(B,52,132)	CCSSCH102J50
C 21	(B,92,124)	CKSRYB105K10
C 41	(B,56,118)	CKSSYB104K16
C 101	(A,169,42)	XCEAT331M16
C 102	(B,166,26)	CKSRYB104K50
C 103	(B,162,26)	CKSSYB104K10
C 104	(A,156,11)	CEVW470M16
C 111	(A,72,112)	CKSQYB105K25
C 112	(A,73,108)	CKSSYB104K16
C 114	(A,70,112)	CKSRYB104K50
C 115	(A,72,108) 4.7 uF	CCG1222
C 131	(B,21,113)	CKSSYB103K16
C 132	(A,15,114)	CEVW100M16
C 133	(B,22,113)	CKSSYB103K16
C 141	(B,159,31)	CKSRYB105K10
C 142	(B,158,29)	CKSRYB105K10
C 143	(B,166,29)	CKSSYB104K10
C 160	(A,157,33) 2.2 uF	CCG1218
C 161	(A,156,35) 2.2 uF	CCG1218
C 211	(B,48,110) 1 uF	CCG1393
C 212	(A,55,111)	CEVW101M16
C 221	(B,24,87)	CKSSYB104K10
C 231	(B,162,37)	CKSRYB105K10
C 232	(B,158,41)	CKSRYB105K10
C 241	(B,105,20)	CKSRYB105K10
C 242	(B,103,20)	CKSRYB105K10
C 243	(B,105,27)	CKSSYB104K10
C 271	(A,76,88)	CKSRYB105K16
C 272	(A,78,93)	CKSRYB105K16
C 301	(B,141,74)	CCSSCH471J50
C 302	(B,141,77)	CKSSYB472K50
C 303	(B,143,76)	CCSSCH8R0D50
C 304	(B,155,75)	CCSSCH8R0D50
C 305	(B,156,76)	CKSSYB103K16
C 306	(B,156,73)	CCSSCH102J50
C 307	(A,149,56)	CKSSYB102K50
C 308	(A,149,55)	CKSSYB104K10
C 309	(A,149,51) 10 uF	CCG1236
C 310	(A,149,53) 10 uF	CCG1236
C 311	(A,155,54) 47 uF	CCG1229
C 316	(B,154,71)	CKSSYB104K10
C 319	(B,155,77)	CKSSYB104K16
C 320	(B,142,78)	CKSSYB104K16
C 321	(B,144,71)	CKSSYB104K10
C 322	(B,143,74)	CKSRYB105K10
C 324	(A,143,49) 47 uF	CCG1229
C 325	(A,143,54) 10 uF	CCG1192
C 326	(A,143,52) 10 uF	CCG1192
C 327	(A,143,55)	CKSSYB104K10
C 328	(A,143,56)	CKSSYB102K50
C 330	(B,147,82)	CKSRYB473K50
C 331	(B,148,81)	CKSSYB102K50
C 334	(B,151,87) 10 uF	CCG1236
C 351	(A,127,54)	CEVLW470M16
C 352	(A,118,56)	CKSSYB103K16
C 353	(A,122,56) 10 uF	CCG1192
C 356	(B,124,47)	CKSSYB682K25
C 357	(B,129,56)	CKSSYB103K16
C 358	(B,134,52) 10 uF	CCG1236
C 359	(B,132,54)	CKSRYB103K50
C 401	(A,132,12)	CCSSCH100D50
C 402	(A,136,15)	CCSSCH120J50
C 403	(A,139,14)	CKSRYB105K10
C 404	(A,139,15)	CKSSYB104K10
C 405	(B,135,22)	CKSRYB105K10
C 406	(B,135,20)	CKSSYB104K10
C 407	(B,134,23)	CKSSYB102K50
C 408	(A,149,21)	CKSSYB104K10
C 409	(A,147,35)	CKSSYB104K10

Circuit Symbol and No.		Part No.
C 410	(A,148,35)	CKSRYB105K10
C 414	(A,133,40)	CKSSYB104K10
C 415	(A,133,41)	CKSRYB105K10
C 419	(B,159,24) 0.1 uF	CCG1321
C 420	(B,158,24)	CKSSYB103K16
C 421	(B,157,24)	CCSSCH102J50
C 422	(A,121,22)	CKSSYB104K10
C 423	(A,120,22)	CKSRYB105K10
C 424	(B,127,23)	CKSSYB104K10
C 425	(A,121,19)	CKSSYB104K10
C 427	(B,126,16)	CKSSYB104K10
C 429	(B,113,23)	CKSSYB104K10
C 430	(B,114,23)	CKSSYB104K10
C 432	(B,127,25)	CKSSYB104K10
C 433	(B,127,26)	CKSSYB104K10
C 436	(B,127,24)	CKSSYB104K10
C 437	(A,150,31)	CKSSYB104K10
C 438	(A,149,30)	CKSSYB104K10
C 601	(A,108,55)	CKSSYB104K10
C 602	(A,109,55)	CKSRYB104K16
C 603	(A,108,58)	CKSSYB104K10
C 604	(A,108,60)	CKSSYB104K10
C 605	(A,107,62)	CKSSYB104K10
C 606	(A,107,67)	CKSSYB104K10
C 607	(B,102,69)	CKSRYB105K10
C 608	(A,107,71)	CKSSYB104K10
C 609	(B,102,72)	CKSRYB105K10
C 610	(A,107,74)	CKSSYB104K10
C 611	(A,108,75)	CKSSYB104K10
C 612	(A,109,76)	CKSSYB104K10
C 613	(A,112,77)	CCSSCH120J50
C 614	(A,108,81)	CCSSCH100D50
C 616	(A,110,87)	CKSSYB104K10
C 617	(A,103,82)	CKSSYB104K10
C 618	(A,102,82)	CKSSYB104K10
C 619	(B,99,76) 1 uF	DCH1246
C 620	(B,97,76) 1 uF	DCH1246
C 621	(A,97,82)	CKSSYB104K10
C 622	(A,96,82)	CKSSYB104K10
C 624	(A,94,82)	CKSSYB104K10
C 625	(A,93,81)	CKSSYB104K10
C 626	(A,88,82)	CKSSYB104K10
C 627	(A,87,82)	CKSSYB104K10
C 628	(A,81,81)	CKSSYB104K10
C 629	(A,80,82)	CKSSYB104K10
C 631	(B,79,75)	CKSSYB104K10
C 632	(B,79,72)	CKSSYB104K10
C 633	(B,79,71)	CKSSYB104K10
C 634	(A,75,63)	CKSSYB104K10
C 635	(B,79,67)	CKSSYB104K10
C 636	(A,74,59)	CKSSYB104K10
C 637	(A,73,57)	CKSRYB104K16
C 638	(A,74,53)	CKSRYB104K16
C 639	(A,79,48)	CKSRYB104K16
C 641	(A,82,48)	CKSRYB104K16
C 642	(A,85,48)	CKSRYB104K16
C 643	(A,86,47)	CKSSYB104K10
C 644	(A,88,47)	CKSRYB104K16
C 645	(A,91,48)	CKSRYB104K16
C 646	(A,94,48)	CKSSYB104K10

Circuit Symbol and No.		Part No.
C 647	(A,95,47)	CKSSYB104K10
C 648	(A,99,48)	CKSSYB104K10
C 649	(A,103,48)	CKSSYB104K10
C 651	(B,111,50) 0.1 uF	CCG1321
C 654	(B,159,102)	CKSRYB105K10
C 655	(B,159,97)	CKSSYB104K10
C 656	(B,113,50)	CCSRCH102J50
C 657	(B,122,53) 0.1 uF	CCG1321
C 658	(B,122,52)	CCSRCH102J50
C 661	(B,122,56) 10 uF	DCH1201
C 664	(B,114,50) 10 uF	DCH1201
C 700	(A,79,47)	CCSSCH120J50
C 821	(A,121,73) 10 uF	CCG1192
C 823	(A,111,72)	CKSRYB105K10
C 824	(A,111,73)	CKSRYB105K10
C 851	(B,70,57)	CKSSYB104K10
C 852	(B,70,58)	CKSSYB104K10
C 853	(B,77,58)	CKSSYB104K10
C 854	(B,81,58)	CKSSYB104K10
C 855	(B,92,58)	CKSSYB104K10
C 856	(A,78,43)	CKSSYB104K10
C 857	(A,76,47)	CKSSYB104K10
C 858	(A,81,43)	CCSSCH8R0D50
C 871	(B,103,57)	CKSSYB104K10
C 882	(B,108,59)	CKSSYB104K10
C 891	(B,105,43)	CKSSYB104K10
C 892	(B,111,46)	CKSSYB104K10
C 893	(B,109,44)	CKSSYB103K16
C 901	(A,116,55)	CCSSCH560J50
C 902	(A,113,40) 10 uF	CCG1192
C 903	(A,101,36)	CKSSYB104K10
C 904	(A,109,29)	CKSSYB103K16
C 905	(A,113,32)	CKSSYB103K16
C 906	(A,115,34) 10 uF	CCG1192
C 907	(A,113,34)	CKSSYB103K16
C 908	(A,115,32) 10 uF	CCG1192
C 909	(A,113,36)	CKSSYB103K16
C 910	(A,108,41)	CKSSYB104K10
C 912	(A,106,41)	CKSSYB104K10
C 938	(A,111,64)	CKSRYB105K10
C 939	(A,111,65)	CKSRYB105K10
C 940	(A,111,67)	CKSRYB105K10
C 941	(A,111,68)	CKSRYB105K10
C 942	(A,111,69)	CKSRYB105K10
C 943	(A,111,71)	CKSRYB105K10
C 1101	(B,124,105)	CKSRYB105K10
C 1102	(B,123,104)	CKSSYB104K10
C 1106	(B,119,97)	CKSSYB104K10
C 1108	(B,119,98)	CKSSYB104K10
C 1110	(B,118,97)	CKSSYB104K10
C 1112	(B,117,98) (A,B,C,D,E,F,G)	CKSSYB104K10
	(B,117,98) (F)	CKSRYB105K10
C 1114	(B,116,97)	CKSSYB104K10
C 1115	(B,118,112)	CKSRYB105K10
C 1116	(B,116,98)	CKSSYB104K10
C 1117	(B,117,112)	CKSRYB105K10
C 1118	(B,115,97)	CKSSYB104K10
C 1119	(B,115,112)	CKSRYB105K10
C 1120	(B,114,98)	CKSSYB104K10
C 1121	(B,114,112) (F)	CKSRYB105K10

Circuit Symbol and No.		Part No.	Circuit Symbol and No.		Part No.
C 1122	(B,114,97)	CKSSYB104K10			
C 1123	(B,112,112) (F)	CKSRYB105K10	C 1304	(A,29,123)	CKSRYB474K16
C 1124	(B,113,98)	CKSSYB104K10	C 1305	(A,37,124)	CKSRYB474K16
C 1125	(B,111,112) (F)	CKSRYB105K10	C 1306	(A,21,118)	CKSQYB225K16
C 1126	(B,112,97)	CKSSYB104K10	C 1307	(A,20,121)	CCG1291
C 1127	(B,105,100) 10 uF	CCG1192	C 1308	(B,54,121)	CKSRYB104K50
C 1128	(B,109,102)	CKSSYB104K10	C 1313	(A,68,126) 4700 uF/16 V	CCH2085
C 1129	(B,108,100)	CKSSYB104K10	C 1315	(A,20,125) 0.1 uF	CCG1311
C 1132	(B,107,106) 10 uF	CCG1192	C 1316	(B,24,114) 10 uF	CCG1192
C 1133	(B,105,102) 10 uF	CCG1192	C 1318	(A,26,123)	CKSQYB474K25
C 1134	(B,123,101) (C,D,E,F,G)	CKSSYB104K10	C 1319	(A,32,124)	CKSQYB474K25
C 1135	(B,110,99)	CCSSCH271J50	C 1320	(A,19,123) 4.7 uF	CCG1291
C 1136	(B,124,109)	CKSRYB105K10	C 2010	(B,62,32)	CKSRYB105K10
C 1137	(B,124,108)	CKSRYB105K10	C 2011	(B,55,30)	CKSRYB105K10
C 1138	(B,124,106)	CKSRYB105K10	C 2017	(B,62,35)	CKSSYB104K10
C 1202	(A,69,100)	CEVW470M16	C 2202	(A,47,34)	CKSSYB104K10
C 1203	(A,66,93)	CKSSYB104K10	C 2203	(A,43,34)	CKSSYB104K10
C 1206	(A,55,101)	CEVW470M16	C 2204	(A,44,35) 10 uF	DCH1201
C 1208	(B,42,95)	CKSRYB105K10	C 2205	(A,48,25) 10 uF	DCH1201
C 1209	(B,44,95)	CKSRYB105K10	C 2206	(A,35,27)	CKSSYB104K10
C 1210	(B,44,98)	CKSRYB105K10	C 2208	(A,35,26)	CKSSYB224K6R3
C 1211	(B,46,98)	CKSRYB105K10	C 2209	(A,34,26)	CKSSYB102K50
C 1212	(B,47,98)	CKSRYB105K10	C 2210	(A,35,22)	CKSSYB104K10
C 1213	(B,48,98)	CKSRYB105K10	C 2212	(A,22,25)	CCSSCH220J50
C 1214	(B,50,98)	CKSRYB105K10	C 2213	(A,21,22)	CCSSCH271J50
C 1215	(B,51,98)	CKSRYB105K10	C 2216	(A,43,24)	CKSSYB104K10
C 1216	(B,52,98)	CKSRYB105K10	C 2219	(A,33,17)	CCSSCH102J50
C 1217	(B,53,98)	CKSRYB105K10	C 2220	(A,22,17)	CCSSCH471J50
C 1218	(B,53,95)	CKSRYB105K10	C 2224	(A,38,19)	CKSSYB152K50
C 1219	(B,55,95)	CKSRYB105K10	C 2234	(A,17,25)	CCSSCH100D50
C 1220	(B,56,95)	CKSRYB105K10	C 2238	(B,46,28)	CCSSCH101J50
C 1223	(A,62,103)	CEVW470M16	C 2239	(B,47,26)	CCSSCH101J50
C 1224	(B,57,73) 10 uF	CCG1332	C 2401	(B,149,109)	CKSSYB222K50
C 1225	(A,67,89)	CKSSYB104K10	C 2402	(B,150,107)	CCSSCH270J50
C 1226	(A,71,91)	CEVW470M16	C 2403	(B,143,96)	CKSSYB104K16
C 1228	(B,55,78)	CKSSYB104K10	C 2404	(A,143,110)	CEVLW470M16
C 1229	(B,48,78)	CKSSYB104K10	C 2405	(A,153,99)	CEVW101M16
C 1231	(B,42,87)	CCSSCH151J50	C 2406	(B,151,101)	CKSRYB105K10
C 1234	(B,61,89)	CCSSCH151J50	C 2407	(B,152,95)	CKSSYB102K50
C 1235	(B,42,89)	CKSSYB102K50	C 2408	(B,152,97)	CKSSYB472K25
C 1236	(B,60,89)	CKSSYB102K50	C 2409	(B,152,98)	CKSSYB104K16
C 1237	(A,75,96) 0.1 uF	CCG1311	C 2410	(B,152,108)	CCSSCH681J50
C 1238	(A,82,92) 0.1 uF	CCG1311	C 2412	(B,147,107) 0.1 uF	CCG1286
C 1271	(A,82,102) 1 uF	CCG1255	C 2414	(A,154,107)	CKSSYB104K10
C 1272	(B,67,102) 1 uF	CCG1325	C 2415	(A,146,103) 22 uF	CCG1254
C 1273	(B,63,103) 1 uF	CCG1325	C 2551	(B,34,45)	CKSSYB104K10
C 1274	(B,67,104) 1 uF	CCG1325	C 2601	(B,51,62) 10 uF	DCH1201
C 1275	(B,63,106) 1 uF	CCG1325	C 2604	(B,53,71)	CKSSYB103K16
C 1276	(B,67,107) 1 uF	CCG1325	C 2605	(B,53,72)	CKSSYB104K10
C 1277	(B,68,115) 1 uF	CCG1255	C 2606	(B,51,65)	CKSSYB104K10
C 1278	(B,64,113) 1 uF	CCG1255	C 2607	(B,51,66)	CKSSYB103K16
C 1279	(B,62,113) 1 uF	CCG1255	C 2608	(B,58,79)	CKSSYB103K16
C 1280	(B,76,115) 1 uF	CCG1255	C 2609	(B,58,80)	CKSSYB104K10
C 1281	(A,78,102)	CKSRYB683K50	C 2610	(A,55,84)	CKSSYB104K10
C 1282	(A,80,102) 1 uF	CCG1255	C 2611	(A,55,85)	CKSSYB103K16
C 1283	(B,61,109) 1 uF	CCG1325	C 2902	(B,90,23) 4.7 uF	CCG1201
C 1284	(B,44,86)	CKSSYB103K16	C 2904	(B,91,26) 4.7 uF	CCG1201
C 1285	(B,59,86)	CKSSYB103K16	C 2905	(B,88,25)	CKSSYB104K10
C 1301	(B,30,119) 4.7 uF	CCG1201	C 2906	(B,86,29)	CKSSYB104K10
C 1302	(A,24,123)	CKSRYB103K50	C 2909	(A,97,28)	CKSRYB105K10
C 1303	(A,34,124)	CKSRYB103K50	C 2916	(A,111,22)	CEVLW221M4

Circuit Symbol and No.		Part No.
C 3001	(B,35,90) 10 uF	CCG1192
C 3003	(A,61,93)	CEVW101M16
C 3006	(A,20,74)	CKSSYB104K10
C 3051	(A,110,131)	CCSSCH101J50
C 3052	(B,100,126)	CKSRYB104K50
C 3053	(B,101,122) (A,B,C,D,E,G)	CKSRYB104K50
	(B,101,122) (F)	CKSRYB105K16
C 3054	(B,105,126) 2.2 uF	CCG1218
C 3055	(B,86,119) 4.7 uF	CCG1201
C 3056	(B,86,113) 4.7 uF	CCG1201
C 3057	(B,89,118) 4.7 uF	CCG1201
C 3058	(B,89,112) 4.7 uF	CCG1201
C 3059	(B,86,116) 4.7 uF	CCG1201
C 3060	(B,89,114) 4.7 uF	CCG1201
C 3061	(B,106,122) 2.2 uF	CCG1218
C 3062	(B,101,120)	CCSSCH101J50
C 3063	(B,98,129)	CCSSCH101J50
C 3064	(B,101,123)	CCSSCH101J50
C 3065	(B,100,115)	CCSSCH101J50
C 3066	(B,98,118)	CCSSCH560J50
C 3067	(A,113,125)	CCSSCH560J50
C 3091	(A,90,111)	CKSRYB471K50
C 3101	(B,168,121) 10 uF	DCH1201
C 3102	(B,157,116)	CKSSYB104K10
C 3147	(A,132,119)	CKSSYB102K50
C 3148	(A,140,126)	CKSSYB102K50
C 3149	(A,142,124)	CKSSYB102K50
C 3150	(A,137,126)	CCSSCH180J50
C 3151	(A,135,126)	CCSSCH180J50
C 3153	(A,142,129)	CKSSYB102K50
C 3154	(B,155,133)	CCSSCH101J50
C 3221	(A,142,118)	CKSSYB104K10
C 3222	(A,143,120)	CKSSYB104K10
C 3231	(A,149,121)	CKSSYB104K10
C 3232	(A,156,119) 10 uF	CCG1192
C 3233	(A,156,121)	CKSSYB104K10
C 3234	(A,152,121)	CKSSYB104K10
C 3235	(A,145,121)	CKSSYB104K10
C 3236	(A,145,127)	CKSRYB105K10
C 3237	(A,146,127)	CKSRYB105K10
C 3238	(A,148,127)	CKSRYB105K10
C 3239	(A,149,127)	CKSRYB105K10
C 3240	(A,151,127)	CKSRYB105K10
C 3241	(A,153,127)	CKSRYB105K10
C 3242	(A,154,127)	CKSRYB105K10
C 3243	(A,156,127)	CKSRYB105K10
C 3271	(A,115,122)	CCSSCH221J50
C 3272	(A,116,121)	CCSSCH221J50
C 3281	(A,128,127)	CCSRCH101J50
C 3282	(A,129,125)	CCSRCH101J50

B

Unit Number : CWN9246
Unit Name : Monitor Unit

MISCELLANEOUS

IC 5001	(A,130,47)	Interface IC	AK4187VN
IC 5101	(A,118,73)	Display IC	OZ527ILN
IC 5201	(A,83,101)	C/DC CONV IC	R1290K103A
IC 5301	(A,39,55)	IC	TC7SH08FUS1
IC 5401	(A,51,65)	Interface IC	BU90R104
Q 5201	(A,75,105)	Resistor Built-IN TR	LTC024EEB
Q 5202	(A,66,98)	Transistor	2SAR502UB
Q 5301	(A,98,74)	Bipolar TR	LSAR523UB
Q 5302	(A,100,78)	Bipolar TR	LSCR523UB
D 5101	(A,118,82)	Diode	RB060M-30
D 5102	(A,103,59)	Diode	CRG03
D 5201	(A,81,94)	Schottky Diode	RB162M-40
D 5202	(A,69,100)	Schottky Diode	DB3S308F0
D 5203	(A,72,100)	Schottky Diode	DB3S308F0
D 5204	(A,71,106)	Schottky Diode	DB3S308F0
L 5102	(A,112,79)	Inductor	ATH7068
L 5201	(A,86,95)	Choke Coil 22 uH	CTH1426
L 5301	(A,57,36)	Inductor	CTF1635
L 5303	(A,40,51)	Ferrite Bead	CTF1528
L 5304	(A,38,52)	Chip Beads	VTL1126
L 5401	(A,41,52)	Chip Beads	VTL1126
L 5402	(A,42,57)	Chip Beads	VTL1126
L 5403	(A,42,52)	Chip Beads	VTL1126
L 5404	(A,43,57)	Chip Beads	VTL1126
L 5405	(A,44,53)	Chip Beads	VTL1126
L 5406	(A,44,57)	Chip Beads	VTL1126
L 5407	(A,43,60)	Chip Beads	VTL1127
L 5408	(A,45,52)	Chip Beads	VTL1126
L 5409	(A,46,56)	Chip Beads	VTL1126
L 5410	(A,47,53)	Chip Beads	VTL1126
L 5411	(A,47,56)	Chip Beads	VTL1126
L 5412	(A,48,53)	Chip Beads	VTL1126
L 5413	(A,49,53)	Chip Beads	VTL1126
L 5414	(A,51,54)	Chip Beads	VTL1126
L 5415	(A,51,57)	Chip Beads	VTL1126
L 5416	(A,52,54)	Chip Beads	VTL1126
L 5417	(A,53,57)	Chip Beads	VTL1126
L 5418	(A,53,54)	Chip Beads	VTL1126
L 5419	(A,54,57)	Chip Beads	VTL1126
L 5420	(A,60,73)	Chip Solid	XTL3010
L 5421	(A,58,73)	Chip Solid	XTL3010
L 5422	(A,62,76)	Chip Ferrite Bead	BTX1047
L 5428	(A,42,67)	Chip Beads	VTL1126
TH5001	(A,123,22)	Thermistor	CCX1084
CN5001	(A,131,32)	FFC/FPC Connerctor	CKS6625
CN5002	(A,132,88)	Connector	CKS4428
CN5003	(A,99,52)	FFC/FPC Connerctor	CKS6514
CN5301	(A,37,42)	FFC/FPC Connerctor	CKS6672

RESISTORS

R 5006	(A,128,46)	RS1/16SS221J
R 5010	(A,129,44)	RS1/16SS621J
R 5011	(A,131,44)	RS1/16SS181J
R 5012	(A,133,46)	RS1/16SS620J
R 5033	(A,125,23)	RS1/16SS183J
R 5104	(A,117,65)	RS1/16SS104J
R 5105	(A,115,65)	RS1/16SS104J
R 5106	(A,117,77)	RS1/16SS102J
R 5107	(A,115,70)	RS1/16SS223J
R 5109	(A,116,68)	RS1/16SS563J
R 5110	(A,119,68)	RS1/16SS104J
R 5111	(A,120,68)	RS1/16SS101J

Circuit Symbol and No.		Part No.
R 5112	(A,123,75)	RS1/16SS102J
R 5113	(A,123,74)	RS1/16SS1202D
R 5114	(A,124,74)	RS1/16SS1202D
R 5119	(A,128,75)	RS1/16SS105J
R 5121	(A,126,74)	RS1/16SS154J
R 5123	(A,117,79)	RS1/8SQ2R2J
R 5201	(A,75,104)	RS1/16SS8201D
R 5202	(A,79,104)	RS1/16SS6800D
R 5203	(A,77,104)	RS1/16SS1502D
R 5206	(A,78,102)	RS1/16SS9102D
R 5207	(A,78,101)	RS1/16SS1802D
R 5208	(A,90,103)	RS1/16SS203J
R 5209	(A,91,102)	RS1/16SS104J
R 5210	(A,64,97)	RS1/16SS103J
R 5211	(A,80,105)	RS1/16SS472J
R 5212	(A,78,99)	RS1/16SS1003D
R 5213	(A,79,99)	RS1/16SS9101D
R 5214	(A,82,92)	RS1/8SQ2R2J
R 5216	(A,88,105)	RS1/16SS3303D
R 5217	(A,86,105)	RS1/16SS5601D
R 5218	(A,86,107)	RS1/16SS3902D
R 5219	(A,88,104)	RS1/10SR472J
R 5231	(A,76,99)	RS1/16SS103J
R 5232	(A,71,110)	RS1/16SS332J
R 5301	(A,26,65)	RS1/16SS39R0D
R 5302	(A,26,63)	RS1/16SS2R2J
R 5303	(A,27,63)	RS1/16SS1300D
R 5304	(A,28,65)	RS1/16SS47R0D
R 5305	(A,28,66)	RS1/16SS51R0D
R 5307	(A,29,65)	RS1/16SS39R0D
R 5308	(A,30,64)	RS1/16SS1R2J
R 5309	(A,31,65)	RS1/16SS75R0D
R 5310	(A,32,65)	RS1/16SS1R5J
R 5311	(A,31,62)	RS1/16SS1300D
R 5312	(A,32,61)	RS1/16SS75R0D
R 5313	(A,31,59)	RS1/16SS82R0D
R 5314	(A,31,57)	RS1/16SS200J
R 5315	(A,32,57)	RS1/16SS47R0D
R 5317	(A,32,54)	RS1/16SS56R0D
R 5319	(A,30,52)	RS1/16SS1800D
R 5321	(A,30,50)	RS1/16SS82R0D
R 5323	(A,17,45)	RS1/16SS473J
R 5325	(A,52,48)	RS1/16SS473J
R 5331	(A,101,71)	RS1/16SS153J
R 5333	(A,98,72)	RS1/16SS105J
R 5335	(A,100,75)	RS1/16SS153J
R 5336	(A,99,76)	RS1/16SS472J
R 5337	(A,98,78)	RS1/16SS101J
R 5340	(A,101,76)	RS1/16SS273J
R 5341	(A,99,75)	RS1/16SS334J
R 5342	(A,38,50)	RS1/16SS470J
R 5344	(A,17,43)	RS1/16SS473J
R 5345	(A,17,44)	RS1/16SS473J
R 5346	(A,35,48)	RS1/16SS473J
R 5349	(A,34,48)	RS1/16SS473J
R 5401	(A,41,51)	RS1/16SS221J
R 5402	(A,42,55)	RS1/16SS221J
R 5403	(A,42,51)	RS1/16SS221J
R 5404	(A,43,55)	RS1/16SS221J
R 5405	(A,44,51)	RS1/16SS221J

Circuit Symbol and No.		Part No.
R 5406	(A,44,55)	RS1/16SS221J
R 5407	(A,40,60)	RS1/16SS101J
R 5408	(A,45,51)	RS1/16SS221J
R 5409	(A,46,55)	RS1/16SS221J
R 5410	(A,47,51)	RS1/16SS221J
R 5411	(A,47,55)	RS1/16SS221J
R 5412	(A,48,51)	RS1/16SS221J
R 5413	(A,49,51)	RS1/16SS221J
R 5414	(A,51,52)	RS1/16SS221J
R 5415	(A,51,56)	RS1/16SS221J
R 5416	(A,52,52)	RS1/16SS221J
R 5417	(A,53,56)	RS1/16SS221J
R 5418	(A,53,52)	RS1/16SS221J
R 5419	(A,54,56)	RS1/16SS221J
R 5420	(A,53,74)	RS1/16SS103J
R 5422	(A,60,68)	RS1/16SS1000D
R 5423	(A,61,66)	RS1/16SS1000D
R 5424	(A,60,64)	RS1/16SS1000D
R 5425	(A,62,61)	RS1/16SS1000D
R 5426	(A,59,60)	RS1/16SS1000D
R 5433	(A,40,67)	RS1/16SS221J
R 5434	(A,54,77)	RS1/16SS473J
R 5435	(A,56,73)	RS1/16SS103J
R 5436	(A,55,75)	RS1/16SS221J
R 5437	(A,54,76)	RS1/16SS103J

CAPACITORS

C 5001	(A,135,38)		CKSSYB103K16
C 5002	(A,134,41)		CKSSYB103K16
C 5003	(A,128,41)		CKSSYB103K16
C 5004	(A,126,38)		CKSSYB103K16
C 5005	(A,127,48)	10 uF	CCG1244
C 5006	(A,129,52)	10 uF	CCG1244
C 5007	(A,130,51)		CKSSYB104K10
C 5008	(A,128,48)		CKSSYB104K10
C 5015	(A,123,21)		CKSSYB104K10
C 5016	(A,123,23)		CKSSYB104K10
C 5101	(A,106,61)	10 uF	CCG1236
C 5103	(A,110,70)	10 uF	CCG1236
C 5104	(A,110,72)	10 uF	CCG1236
C 5105	(A,115,66)		CKSRYB105K16
C 5106	(A,114,72)		CKSRYB105K16
C 5108	(A,117,68)		CKSRYB105K10
C 5109	(A,118,68)		CCSSCH101J50
C 5110	(A,122,80)	10 uF	CCG1236
C 5113	(A,125,75)		CKSRYB224K16
C 5120	(A,119,79)		CKSSYB332K50
C 5121	(A,125,98)		CCSRCH101J50
C 5201	(A,84,106)		CKSSYB224K6R3
C 5203	(A,81,106)		CKSRYB105K10
C 5204	(A,82,106)		CKSSYB224K6R3
C 5205	(A,75,100)		CKSSYB104K10
C 5206	(A,79,91)		CKSSYB472K50
C 5207	(A,87,101)		CKSSYB102K50
C 5208	(A,71,108)		CKSRYB105K16
C 5209	(A,90,101)		CKSRYB105K10
C 5210	(A,70,97)		CKSQYB105K25
C 5212	(A,72,97)		CKSQYB105K25
C 5213	(A,73,106)		CKSRYB104K50

Circuit Symbol and No.			Part No.
C 5214	(A,69,102)		CKSRYB104K50
C 5215	(A,72,102)		CKSRYB104K50
C 5217	(A,68,94)		CKSYB475K16
C 5218	(A,80,107)		CKSSYB682K25
C 5219	(A,88,99)	4.7 uF	CCG1212
C 5220	(A,75,102)		CKSSYB103K16
C 5221	(A,78,100)		CKSSYB561K50
C 5222	(A,77,95)		CKSYB475K16
C 5224	(A,86,104)		CKSSYB681K50
C 5302	(A,25,61)	4.7 uF	CCG1222
C 5304	(A,28,68)		CKSSYB104K16
C 5306	(A,30,68)		CKSSYB104K16
C 5308	(A,32,68)		CKSSYB104K16
C 5309	(A,33,64)		CKSSYB102K50
C 5310	(A,33,63)		CKSRYB105K16
C 5311	(A,34,61)		CKSSYB102K50
C 5312	(A,34,60)		CKSSYB104K10
C 5314	(A,32,58)		CKSSYB104K10
C 5316	(A,34,55)		CKSSYB104K10
C 5318	(A,34,53)		CKSSYB104K10
C 5320	(A,32,50)		CKSRYB105K10
C 5321	(A,57,46)		CKSSYB102K50
C 5323	(A,57,45)		CKSSYB104K16
C 5325	(A,58,43)	10 uF	CCG1236
C 5326	(A,57,33)		CKSSYB102K50
C 5329	(A,56,49)		CKSSYB102K50
C 5330	(A,57,49)		CKSSYB104K10
C 5331	(A,59,49)	10 uF	CCG1192
C 5334	(A,22,48)		CKSSYB104K16
C 5335	(A,20,49)	4.7 uF	CCG1222
C 5337	(A,20,56)		CKSQYB225K16
C 5340	(A,23,51)		CKSQYB334K50
C 5342	(A,30,47)	2.2 uF	CCG1218
C 5343	(A,98,71)		CKSSYB104K10
C 5344	(A,100,81)	10 uF	CCG1236
C 5345	(A,39,48)		CCSSCH330J50
C 5346	(A,39,52)		CKSSYB104K10
C 5347	(A,32,48)		CKSSYB102K50
C 5348	(A,53,47)		CKSSYB102K50
C 5349	(A,15,45)		CKSRYB105K10
C 5401	(A,39,61)		CCSSCH270J50
C 5403	(A,49,57)		CKSSYB104K10
C 5404	(A,49,58)		CKSSYB103K16
C 5405	(A,55,58)		CKSSYB103K16
C 5406	(A,55,57)		CKSSYB104K10
C 5407	(A,59,71)		CKSSYB103K16
C 5408	(A,60,71)		CKSSYB104K10
C 5409	(A,57,59)		CKSSYB104K10
C 5410	(A,57,60)		CKSSYB103K16
C 5414	(A,58,78)		CKSSYB103K16
C 5416	(A,61,79)	10 uF	DCH1201
C 5417	(A,41,66)		CKSSYB104K10
C 5418	(A,43,66)		CKSSYB103K16
C 5419	(A,51,73)		CKSSYB103K16
C 5420	(A,51,74)		CKSSYB104K10
C 5421	(A,56,74)	2.2 uF	CCG1205

C

Unit Number : CWX4606

Circuit Symbol and No.			Part No.

Unit Name : DVD Core Unit(MS7.2)

MISCELLANEOUS

IC 1004	(B,85,53)	IC	NJM2885DL1-33
IC 1005	(B,88,63)	IC	R1232D121B
IC 1201	(A,27,14)	IC	BD8217EFV
IC 1401	(B,64,34)	Flash ROM Unit	CWW8456
IC 1402	(A,86,19)	Flash ROM Unit	CWW8457
IC 1480	(B,63,12)	RAM IC	M12L64164A-5TG2Y
IC 1501	(A,62,20)	IC	MN2DS0018MA
IC 1801	(B,44,16)	D/A Converter	PCM1753DBQ
IC 1900	(B,38,9)	IC	S-1200B50-M5
IC 1901	(B,73,58)	Regulator IC	S-1133B50-U5
Q 1101	(B,64,50)	Transistor	LSCR523UB
Q 1102	(B,68,48)	Transistor	LSCR523UB
Q 1103	(B,64,55)	Transistor	2SB1132
Q 1104	(B,64,43)	Transistor	2SB1132
L 1003	(B,83,60)	Inductor	CTF1757
L 1004	(B,85,69)	Inductor	CTF1295
L 1500	(A,45,14)	Inductor	CTF1387
L 1512	(A,59,5)	Inductor	CTF1743
L 1900	(A,92,69)	Inductor	CTF1487
L 1901	(A,84,69)	Inductor	CTF1558
L 1902	(A,78,67)	Inductor	CTF1734
X 1501	(A,45,10)	Resonator 27.000 MHz	CSS1768
F 1900	(A,89,70)	Chip EMI Filter	DTF1106
F 1901	(A,85,71)	Chip EMI Filter	DTL1106
CN1101	(A,41,43)	Connector	CKS6628
CN1201	(A,25,35)	Connector	CKS6640
CN1301	(B,91,11)	Connector	CKS5705
CN1901	(A,74,56)	Connector	CKS6025

RESISTORS

R 1101	(B,61,49)	RS1/16SS104J
R 1102	(B,67,50)	RS1/16SS104J
R 1103	(B,67,52)	RS1/16SS391J
R 1104	(B,62,51)	RS1/16SS511J
R 1105	(B,70,48)	RS1/16SS4300F
R 1106	(B,69,50)	RS1/16SS5600F
R 1109	(B,68,52)	RS1/16SS3R3J
R 1110	(B,60,47)	RS1/16SS3R3J
R 1111	(B,60,57)	RS1/10SR2R2J
R 1112	(B,60,53)	RS1/10SR2R2J
R 1113	(B,69,46)	RS1/10SR3R3J
R 1114	(B,67,43)	RS1/10SR3R9J
R 1115	(B,60,54)	RS1/10SR2R2J
R 1116	(B,60,56)	RS1/10SR2R2J
R 1117	(B,67,44)	RS1/10SR3R9J
R 1118	(B,67,46)	RS1/10SR3R9J
R 1200	(A,33,8)	RS1/16SS753J
R 1201	(A,33,6)	RS1/16SS753J
R 1205	(A,34,20)	RS1/16SS1R0J
R 1210	(B,19,16)	RS1/16SS101J
R 1211	(A,19,12)	RS1/16SS102J
R 1212	(A,20,11)	RS1/16SS102J
R 1213	(B,23,19)	RS1/10SR1R0J
R 1214	(B,22,19)	RS1/10SR1R0J
R 1215	(B,24,19)	RS1/10SR1R0J
R 1216	(B,27,19)	RS1/10SR1R0J

Circuit Symbol and No.		Part No.
R 1218	(A,17,10)	RS1/16SS1R0J
R 1219	(A,17,11)	RS1/16SS1R0J
R 1222	(A,19,8)	RS1/16SS1R0J
R 1223	(A,19,7)	RS1/16SS1R0J
R 1226	(A,22,26)	RS1/16SS101J
R 1303	(B,90,21)	RS1/16SS0R0J
R 1304	(B,89,22)	RS1/16SS563J
R 1305	(B,89,23)	RS1/16SS243J
R 1306	(B,90,23)	RS1/16SS683J
R 1307	(B,89,21)	RS1/16SS243J
R 1314	(B,86,22)	RAB4CQ822J
R 1401	(B,75,31)	RS1/16SS221J
R 1402	(B,53,29)	RS1/16SS104J
R 1405	(B,79,12)	RS1/16SS104J
R 1406	(B,80,10)	RS1/16SS472J
R 1480	(B,56,20)	RAB4CQ560J
R 1481	(B,61,21)	RAB4CQ560J
R 1482	(B,65,20)	RAB4CQ560J
R 1483	(B,68,20)	RAB4CQ560J
R 1484	(B,71,20)	RAB4CQ560J
R 1485	(B,54,4)	RAB4CQ560J
R 1486	(B,59,4)	RAB4CQ560J
R 1487	(B,68,4)	RAB4CQ560J
R 1488	(B,72,4)	RAB4CQ560J
R 1489	(B,63,5)	RS1/16SS560J
R 1490	(B,54,20)	RS1/16SS560J
R 1501	(A,47,9)	RS1/16SS122J
R 1503	(A,47,11)	RS1/16SS105J
R 1504	(A,43,14)	RS1/16SS100J
R 1505	(A,48,14)	RS1/16SS101J
R 1506	(A,41,15)	RS1/16SS101J
R 1507	(A,42,16)	RS1/16SS101J
R 1508	(A,46,16)	RS1/16SS221J
R 1509	(A,66,37)	RS1/16SS102J
R 1510	(A,66,35)	RS1/16SS102J
R 1512	(A,60,4)	RS1/16SS101J
R 1513	(A,68,42)	RS1/16SS103J
R 1514	(A,68,36)	RS1/16SS183J
R 1515	(A,71,38)	RS1/16SS472J
R 1516	(A,66,41)	RS1/16SS104J
R 1517	(A,78,16)	RS1/16SS103J
R 1518	(A,78,24)	RS1/16SS103J
R 1519	(A,77,27)	RS1/16SS102J
R 1522	(A,66,40)	RS1/16SS104J
R 1523	(A,67,38)	RS1/16SS221J
R 1524	(A,74,41)	RS1/16SS472J
R 1525	(A,69,36)	RS1/16SS223J
R 1526	(A,70,38)	RS1/16SS103J
R 1527	(A,69,34)	RS1/16SS223J
R 1528	(A,79,17)	RS1/16SS103J
R 1529	(A,77,18)	RS1/16SS103J
R 1530	(B,54,27)	RS1/16SS104J
R 1531	(A,67,40)	RS1/16SS391J
R 1534	(A,74,37)	RS1/16SS221J
R 1535	(A,78,28)	RS1/16SS101J
R 1536	(A,72,37)	RS1/16SS104J
R 1537	(A,73,40)	RS1/16SS104J
R 1538	(A,64,5)	RS1/16SS104J
R 1539	(A,79,30)	RS1/16SS101J
R 1540	(A,73,39)	RS1/16SS221J

Circuit Symbol and No.		Part No.
R 1541	(A,74,39)	RS1/16SS221J
R 1542	(A,76,32)	RS1/16SS104J
R 1543	(A,70,37)	RS1/16SS561J
R 1544	(A,77,32)	RS1/16SS104J
R 1545	(A,78,19)	RS1/16SS103J
R 1546	(A,78,22)	RS1/16SS103J
R 1548	(A,77,29)	RS1/16SS101J
R 1550	(B,48,25)	RS1/16SS6801F
R 1551	(B,50,25)	RS1/16SS4702F
R 1556	(A,61,46)	RS1/16SS472J
R 1600	(A,44,25)	RS1/16SS0R0J
R 1601	(A,47,23)	RS1/16SS123J
R 1602	(A,43,23)	RS1/16SS123J
R 1603	(A,42,26)	RN1/16SE1002D
R 1604	(A,54,37)	RS1/16SS105J
R 1605	(A,54,35)	RS1/16SS105J
R 1611	(A,47,24)	RS1/16SS105J
R 1702	(A,48,20)	RS1/16SS3002D
R 1704	(A,42,20)	RS1/16SS2402D
R 1705	(A,41,18)	RS1/16SS1002D
R 1706	(A,42,19)	RS1/16SS101J
R 1708	(B,52,22)	RS1/16SS2000D
R 1801	(B,35,11)	RS1/10SR0R0J
R 1803	(B,38,19)	RS1/16SS821J
R 1804	(B,38,18)	RS1/16SS821J
R 1805	(B,32,15)	RS1/16SS104J
R 1806	(B,36,15)	RS1/16SS104J
R 1905	(A,81,65)	RS1/16SS101J
R 1910	(A,79,68)	RS1/16SS101J
R 1911	(A,69,48)	RS1/16SS101J
R 1915	(A,64,47)	RS1/16SS0R0J

CAPACITORS

C 1008	(B,79,61)	10 uF	DCH1201
C 1009	(B,79,63)	10 uF	DCH1201
C 1010	(B,79,54)		CKSQYB225K10
C 1011	(B,78,51)		CKSRYB105K10
C 1013	(B,84,65)	10 uF	DCH1201
C 1014	(B,83,66)	10 uF	DCH1201
C 1101	(B,70,53)	10 uF	CCG1192
C 1104	(B,61,52)		CKSSYB104K10
C 1105	(B,61,47)		CKSSYB104K10
C 1106	(B,62,58)		CKSSYB103K16
C 1107	(B,65,41)		CKSSYB103K16
C 1108	(A,37,34)		CKSSYB103K16
C 1109	(A,39,32)		CKSRYB224K16
C 1110	(A,37,36)		CKSSYB103K16
C 1111	(A,40,34)		CKSRYB224K16
C 1112	(B,60,43)		CKSYB226K6R3
C 1113	(B,68,56)		CKSYB226K6R3
C 1201	(B,27,15)		CKSYB475K16
C 1202	(B,28,18)		CKSSYB104K16
C 1205	(A,33,22)		CKSSYB103K16
C 1206	(A,36,22)		CKSRYB104K16
C 1207	(A,33,18)		CKSRYB104K16
C 1208	(A,33,14)		CKSSYB104K16
C 1212	(A,32,24)		CKSSYB104K16
C 1213	(B,22,25)		CKSSYB222K50
C 1214	(B,22,26)		CKSRYB104K16

Circuit Symbol and No.		Part No.
C 1218	(A,19,9)	CKSRYB104K16
C 1219	(A,21,7)	CKSRYB104K16
C 1220	(B,22,11)	CEVW101M16
C 1401	(B,76,30)	CKSSYB103K16
C 1403	(B,52,33)	CKSSYB104K10
C 1404	(B,51,35)	CKSQYB475K6R3
C 1408	(B,82,13)	CKSSYB104K10
C 1409	(B,79,14)	CKSQYB475K6R3
C 1480	(B,51,19)	CKSSYB104K10
C 1481	(B,51,20)	CKSSYB104K10
C 1482	(B,59,20)	CKSSYB104K10
C 1484	(B,63,20)	CKSSYB104K10
C 1485	(B,74,21)	CKSSYB104K10
C 1487	(B,62,5)	CKSSYB104K10
C 1488	(B,56,5)	CKSSYB104K10
C 1489	(B,75,16)	CKSQYB106K6R3
C 1501	(B,47,29)	CKSQYB106K6R3
C 1502	(B,83,18)	CKSQYB106K6R3
C 1503	(A,62,5)	CKSSYB104K10
C 1504	(A,53,5)	CKSSYB104K10
C 1505	(A,56,5)	CKSSYB104K10
C 1506	(A,57,5)	CKSSYB104K10
C 1507	(A,65,5)	CKSSYB104K10
C 1508	(A,69,5)	CKSSYB104K10
C 1509	(A,71,5)	CKSSYB104K10
C 1510	(A,47,8)	CCSSCH120J50
C 1511	(A,48,10)	CKSSYB104K10
C 1512	(A,45,12)	CCSSCH100D50
C 1513	(B,76,10)	CKSSYB104K10
C 1514	(A,48,13)	CKSSYB104K10
C 1515	(A,48,15)	CKSSYB104K10
C 1516	(B,75,14)	CKSSYB104K10
C 1517	(A,77,16)	CKSSYB104K10
C 1518	(B,77,21)	CKSSYB104K10
C 1519	(A,77,26)	CKSSYB104K10
C 1520	(A,77,30)	CKSSYB104K10
C 1521	(A,62,35)	CKSSYB104K10
C 1522	(A,67,34)	CKSSYB104K10
C 1523	(A,70,35)	CKSSYB471K50
C 1524	(A,68,38)	CKSSYB473K16
C 1525	(A,69,39)	CKSSYB103K16
C 1526	(A,67,36)	CKSSYB103K16
C 1528	(A,72,36)	CCSSCH471J50
C 1529	(A,69,41)	CKSSYB103K16
C 1530	(B,50,26)	CKSSYB104K10
C 1531	(A,71,40)	CKSSYB473K16
C 1601	(A,44,27)	CKSSYB103K16
C 1602	(A,48,22)	CCSSCH101J50
C 1603	(A,43,22)	CCSSCH101J50
C 1604	(A,45,22)	CCSSCH680J50
C 1605	(A,41,23)	CCSSCH680J50
C 1606	(A,40,27)	CKSSYB104K10
C 1607	(A,50,36)	CKSQYB106K6R3
C 1608	(A,47,32)	CKSRYB105K10
C 1609	(A,54,39)	CKSSYB104K10
C 1612	(A,55,38)	CKSSYB104K10
C 1613	(A,56,38)	CKSSYB104K10
C 1614	(A,57,38)	CKSSYB104K10
C 1615	(A,57,36)	CKSSYB104K10
C 1616	(A,57,34)	CKSSYB104K10

Circuit Symbol and No.		Part No.
C 1617	(A,58,35)	CKSSYB104K10
C 1618	(A,60,37)	CCSSCH101J50
C 1619	(A,59,35)	CKSSYB562K25
C 1620	(A,60,35)	CKSSYB224K6R3
C 1621	(A,61,37)	CKSSYB224K6R3
C 1622	(A,62,37)	CKSSYB333K16
C 1623	(A,48,32)	CKSRYB105K10
C 1624	(A,61,38)	CKSSYB104K10
C 1625	(A,60,38)	CKSSYB104K10
C 1628	(A,47,25)	CKSSYB103K16
C 1700	(A,48,19)	CKSSYB104K10
C 1701	(A,47,18)	CKSSYB104K10
C 1702	(A,41,21)	CKSRYB105K10
C 1703	(A,44,21)	CKSSYB104K10
C 1704	(A,40,20)	CKSSYB104K10
C 1801	(A,82,49)	CKSSYB104K10
C 1802	(B,50,14) 10 uF	CCG1192
C 1805	(B,38,14)	CKSSYB104K10
C 1808	(B,32,18)	CCSRCH182J50
C 1809	(B,35,18)	CCSRCH182J50
C 1810	(B,33,17)	CKSQYB475K6R3
C 1811	(B,36,17)	CKSQYB475K6R3
C 1901	(B,35,9)	CKSRYB105K10
C 1902	(B,39,6)	CKSRYB105K16
C 1903	(B,33,6)	CKSSYB104K10
C 1904	(A,70,45)	CCSSCH101J50
C 1905	(A,86,69)	CKSSYB102K50
C 1906	(B,75,62)	CKSSYB104K16
C 1907	(B,70,57) 4.7 uF	CCG1201
C 1908	(A,90,68)	CKSSYB102K50

D

Unit Number : CWX4034
Unit Name : Compound Unit(A)

MISCELLANEOUS

S 1201	Spring Switch(12cm)	CSN1080
S 1202	Spring Switch(8cm)	CSN1080
S 1203	Spring Switch(DISC SENS)	CSN1082
S 1204	Spring Switch(DISC SENS)	CSN1083
S 1205	Spring Switch(8cm)	CSN1081

E

Unit Number : CWX3394
Unit Name : Compound Unit(B)

MISCELLANEOUS

S 1206	Spring Switch(CLAMP)	CSN1080

F

Unit Number : CWN8792
Unit Name : Keyboard Unit

MISCELLANEOUS

IC 5501	(A,158,16) IR RC Rec Module	SIR8440B5
Q 5501	(B,51,11) Chip Transistor	HN1C01FU
Q 5502	(B,49,7) Bipolar TR	LSCR523UB

Circuit Symbol and No.		Part No.
Q 5503	(B,148,17) Chip Transistor	HN1C01FU
Q 5504	(B,143,16) Bipolar TR	LSCR523UB
D 5501	(A,149,10) LED	SMLVN6RGB2UK(B)
D 5502	(A,23,10) LED	SMLVN6RGB2UK(B)
S 5501	(A,66,15) Switch	CSN1057
S 5502	(A,102,15) Push Switch	CSG1155
S 5503	(A,142,15) Push Switch	CSG1155
S 5504	(A,120,6) Push Switch	CSG1155
S 5505	(A,13,11) Encoder	CSD1168
S 5506	(A,84,6) Push Switch	CSG1155
S 5507	(A,31,8) Push Switch	CSG1155
S 5508	(A,47,6) Push Switch	CSG1155
S 5509	(A,66,6) Push Switch	CSG1155
S 5510	(A,102,6) Push Switch	CSG1155
CN5501	(B,115,12) FFC/FPC Connector	CKS6638

RESISTORS

R 5501	(B,155,17)	RS1/10SR101J
R 5503	(B,55,11)	RS1/10SR272J
R 5505	(B,51,14)	RS1/10SR560J
R 5506	(B,53,14)	RS1/10SR680J
R 5507	(B,48,10)	RS1/10SR560J
R 5508	(B,44,11)	RS1/10SR680J
R 5509	(B,48,11)	RS1/10SR272J
R 5513	(B,53,8)	RS1/10SR272J
R 5514	(B,53,7)	RS1/10SR560J
R 5515	(B,56,7)	RS1/10SR680J
R 5516	(B,39,7)	RS1/10SR152J
R 5517	(B,39,6)	RS1/10SR222J
R 5518	(B,64,8)	RS1/10SR472J
R 5519	(B,94,6)	RS1/10SR123J
R 5520	(B,151,19)	RS1/10SR272J
R 5521	(B,150,20)	RS1/10SR560J
R 5522	(B,149,22)	RS1/10SR680J
R 5523	(B,140,13)	RS1/10SR272J
R 5524	(B,148,20)	RS1/10SR560J
R 5525	(B,147,21)	RS1/10SR680J
R 5526	(B,140,14)	RS1/10SR272J
R 5527	(B,143,19)	RS1/10SR560J
R 5528	(B,145,20)	RS1/10SR680J
R 5530	(B,104,8)	RS1/10SR392J
R 5531	(B,100,7)	RS1/10SR332J
R 5532	(B,32,7)	RS1/10SR153J

CAPACITORS

C 5502	(B,157,16) 10 uF	CCG1192

G

Unit Number : EWX2008
Unit Name : Main PCB Unit

MISCELLANEOUS

IC 1	(A,24,20) IC	BA6247FP
Q 1	(A,14,17) Transistor	LTC024EEB
D 1	(A,16,16) Diode	DZ2J056M0
S 1	(A,27,46) Spring Switch(DEG0)	CSN1081
CN1	(A,25,6) Connector	CKS6063

Circuit Symbol and No.		Part No.

RESISTORS

R 1	(A,17,13)	RS1/16SS272J
R 2	(A,19,15)	RS1/16SS471J
R 3	(A,23,25)	RS1/16SS102J
R 4	(A,27,26)	RS1/16SS102J
R 5	(A,27,25)	RS1/16SS102J
R 6	(A,16,13)	RS1/16SS183J

CAPACITORS

C 1	(A,12,24)	CEVW101M16
C 2	(A,27,15)	CKSSYB104K16
C 3	(A,21,15)	CKSRYB105K16
C 4	(A,31,25)	CKSSYB104K16
C 5	(A,20,36)	CKSSYB223K16
C 6	(A,14,35)	CKSSYB223K16
C 7	(A,15,11)	CKSSYB104K10

H

Unit Number : EWX2009
Unit Name : SW PCB Unit

MISCELLANEOUS

S 51	(A,17,7) Spring Switch(CLOSE)	CSN1080
S 52	(A,15,15) Spring Switch(OPEN)	CSN1080
VR51	(A,11,30) Variable Resistor 10 kohm	CCW1029

RESISTORS

R 51	(A,11,12)	RS1/16SS272J
R 52	(A,11,11)	RS1/16SS273J
R 53	(A,11,9)	RS1/16SS472J
R 54	(A,11,10)	RS1/16SS563J

CAPACITORS

C 51	(A,11,19)	CKSSYB104K10
C 52	(A,9,14)	CKSSYB104K10