www.DataSheet4U.com

NPN SILICON RF POWER TRANSISTOR

DESCRIPTION:

The **ASI BLX15** is a Common Emitter Device Designed for High Linearity Class A/AB HF Applications.

FEATURES INCLUDE:

- Gold Metalization
- Emitter Ballasting

MAXIMUM RATINGS

I_C	10 A
V_{CB}	110 V
P_{DISS}	233 W @ T_C = 25 °C
T_J	-55 °C to +200 °C
T_{STG}	-55 °C to +200 °C
θ_{JC}	0.75 °C/W

PACKAGE STYLE .550 4L STUD

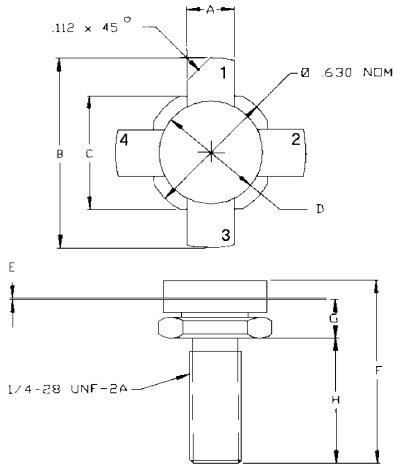

	MINIMUM Inches/mm	MAXIMUM Inches/mm
A	.220/5,59	.230/5,84
B		1.050/26,67
C	.545/13,84	.555/14,10
D	.495/12,57	.505/12,83
E	.003/0,08	.007/0,18
F		.830/21,08
G	.185/4,70	.198/5,03
H	.497/12,62	.530/13,46

1 = COLLECTOR 2 & 4 = EMITTER
3 = BASE

CHARACTERISTICS T_C = 25 °C

SYMBOL	TEST CONDITIONS	MINIMUM	TYPICAL	MAXIMUM	UNITS
BV_{CEO}	I_C = 100 mA	55			V
BV_{CBO}	I_C = 100 mA	110			V
BV_{EBO}	I_E = 10 mA	4.0			V
h_{FE}	V_{CE} = 6.0 V I_C = 1.4 A	15		50	---
P_g IMD_3 η_C	V_{CE} = 50 V I_{cq} = 100 mA P_{out} = 150 W(PEP) f = 30 MHz	14 --- 37	--- -37 45	--- -30 ---	dB dBc %
C_{ob}	V_{CB} = 50 V f = 1.0 MHz			220	pF

ADVANCED SEMICONDUCTOR, INC.
7525 ETHEL AVENUE • NORTH HOLLYWOOD, CA 91605 • (818) 982-1200 • FAX (818) 765-3004

Specifications are subject to change without notice.

www.DataSheet4U.com
www.DataSheet4U.com
DataSheet4U.com
www.DataSheet4U.com