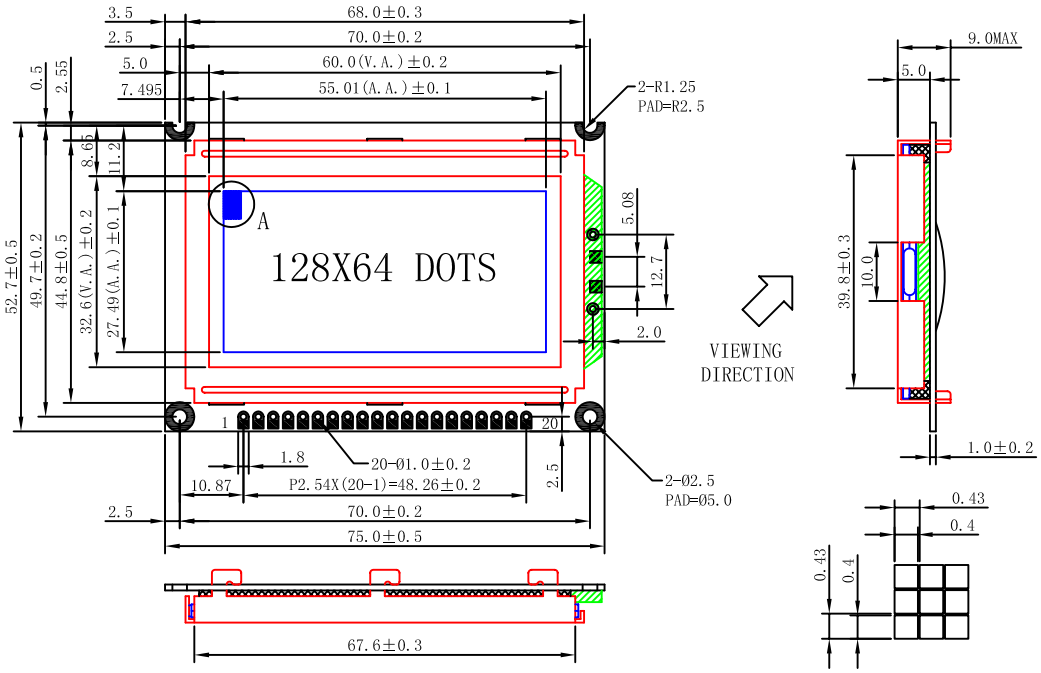

DETAIL A

NOTE:
1 TOLERANCES UNLESS OTHERWISE SPECIFIED: ±0.25mm
2 ALL DIMENSION ARE IN mm
3 VIESING ANGLE: 6 O'CLOCK
4 MULTIPLEX LEVEL: 1/64 DUTY, 1/9 BIAS
5 LCD: STN(YELLOW-GREEN MODE) OR FSTN
6 DISPLAY MODE: TRANSFLECTIVE / POSITIVE
7 CONNECTORS: ZEBRA
8 DATA TRANSFER: 8-BIT PARALLEL DATA TRANSFER
9 BACKLIGHT: LED-EDGE
10 COLOR OF BACKLIGHT: WHITE OR YELLOW-GREEN

I/O CONNECTION		
Pin No	Symbol	Function
1	VDD	Power supply (+)
2	VSS	Power supply (GND)
3	V0	Power supply for LCD
4	DB0	Data bus line
5	DB1	Data bus line
6	DB2	Data bus line
7	DB3	Data bus line
8	DB4	Data bus line
9	DB5	Data bus line
10	DB6	Data bus line
11	DB7	Data bus line
12	CS1	Chip select signal1
13	CS2	Chip select signal2
14	/RST	Reset signal
15	R/W	Read/write select signal
16	D/I	Data/Instructions select signal
17	E	Enable signal
18	VEE	Interner DC-DC output
19	LED_A	Power supply for LED (+)
20	LED_K	Power supply for LED (-)

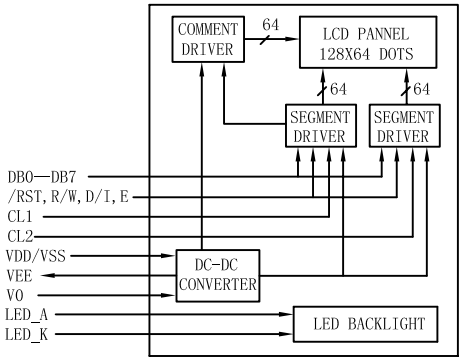

ABSOLUTE MAXIUM RATING					
ITEM	Symbol	Condition	Min	Max	Units
Power supply for logic	Vdd-Vss	25℃	-0.3	7.0	V
LCM current consumption(No B/L)	Vdd-V0	25℃	-0.3	17.0	V
Operating voltage for LCD	Vin	25℃	-0.3	Vdd+0.3	V
Operating temperature	Top	—	-20	70	℃
Storage temperature	Tstg	—	-25	80	℃

ELECTRO-OPTICAL CHARACTERISTICS						
ITEM	Symbol	Condition	Min	Typ	Max	Units
Power supply for logic	Vdd-Vss	25℃	4.5	5.0	5.5	V
LCM current consumption(No B/L)	Id	Vdd=5V	--	2.0	5.0	mA
Operating voltage for LCD	Vdd-V0	-20℃	--	--	--	V
		25℃	--	9.0	--	V
		70℃	--	--	--	V
Backlight current consumption	ILed/edge	VB/L=5.0V	--	40	--	mA

BeyondTek, Inc.

DESIGN MODEL		BTG-120601B	
VAR.	A	DATE	2004.11.12
CUSTOMER MODEL		APPROVED BY	
		CHECKED BY	
PAGE 1 OF 1		DRAWN BY	