General-purpose CMOS Logic IC Series (BU4S,BU4000B Series)

High Voltage CMOS Logic ICs <Logic Gate>

BU4001B/F,BU4011B/F/FV,BU4030B/F,BU4070B/F, BU4081B/F/FV,BU4093B/F/FV,BU4069UB/F/FV,BU4584B/F/FV

No.11050EBT03

●Description

BU4001B series ICs are 2-input positive logic NOR gates, each with four built-in circuits. A buffer achieved by an inverter added at the gate output improves the input / output propagation characteristics and minimizes variation in the propagation time caused by an increase in the load capacitance. BU4011B series ICs are 2-input positive logic NAND gates. Four circuits are contained on a single chip. An inverter-based buffer is included at the gate output, enabling improved input / output propagation characteristics, and an increased load capacitance minimizes fluctuations in the propagation time.
BU4030B and BU4070B series ICs are exclusive OR gates, each with four built-in circuits. An inverter-based buffer was incorporated at the gate output for enhanced I/O voltage characteristics, and the load capacitance has been increased in order to minimize fluctuations in the propagation time. BU4081B series are 2-input positive logic AND gates with four circuits mounted on a single chip. An inverter-type buffer was added to the gate output, improving input/output transmission speed, and an increased load capacitance suppresses fluctuations in the transmission time. BU4093B series ICs are 4-circuit, 2-input NAND gates whose input pins all have a Schmitt trigger function. BU4069UB series ICs are 6-circuit inverters with no buffers. A single-stage gate configuration reduces propagation time. BU4584B series ICs are inverter-type Schmitt trigger circuits, each incorporating 6 circuits in a single chip.

●Features

1) Low power consumption
2) Broad operating supply voltage range: 3V to 16V
3) High input impedance
4) High fan out
5) L-TTL2 and LS-TTL1 inputs can be directly driven
6) All outputs are equipped with buffers (except for BU4069UB)

●Applications

These products are suitable for applications requiring low power consumption and a high degree of noise tolerance
The BU4030B/BU4070B series can be used in digital comparators and parity circuits
The BU4093B series are suitable as line receivers, waveform shaping and multi-vibrators, etc.
The BU4584B series can be used in waveform shaping circuits for inputs with a slow rise time and fall time

●Lineup

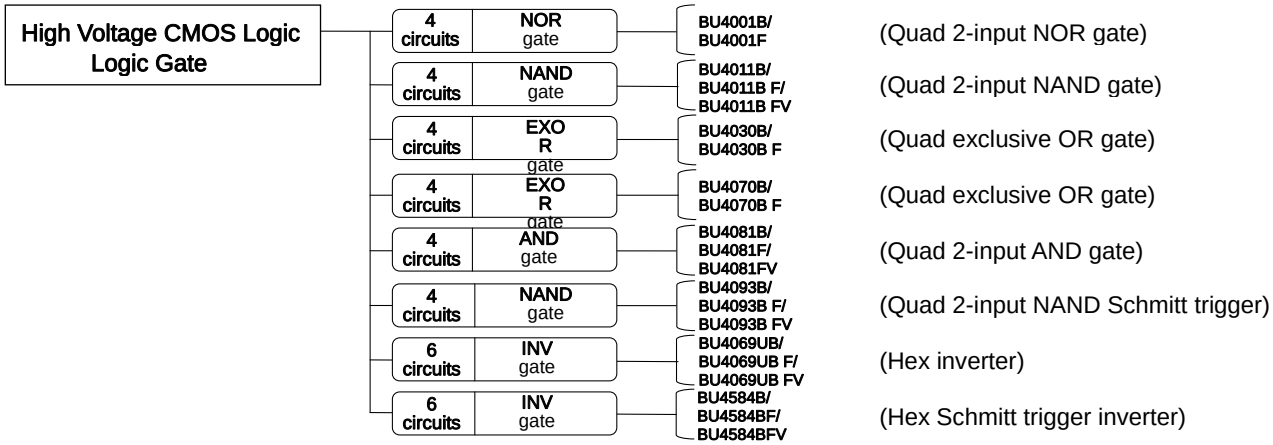

© 2011 ROHM Co., Ltd. All rights reserved.

●Absolute Maximum Ratings

Parameter	Symbol	Limit							Unit
		BU4001B	BU4011B	BU4030B /BU4070B	BU4081B	BU4093B	BU4069UB	BU4584B	
Power Supply Voltage	VDD	-0.3 to 18							V
Supply current	Iin	±10							mA
Operating temperature	Topr	-40 to 85							℃
Storage temperature	Tstg	-55 to 150							℃
Input Voltage	VIN	-0.3 to VDD+0.3							V
Maximum junction temperature	Tjmax	150							℃

●Recommended Operating Conditions

Parameter	Symbol	Limit							Unit
		BU4001B	BU4011B	BU4030B /BU4070B	BU4081B	BU4093B	BU4069UB	BU4584B	
Operating Power Supply	VDD	3 to 16							V
Input Voltage	VIN	0 to VDD							V

●Thermal Derating Curve

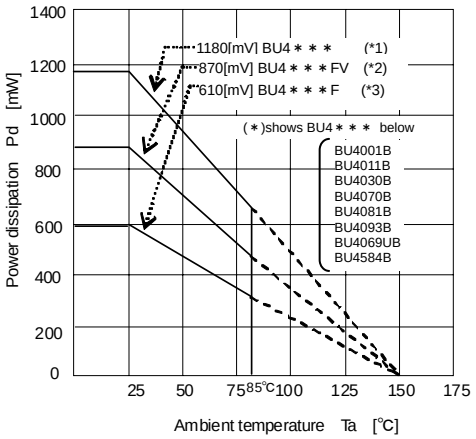

(*1)	(*2)	(*3)	UNIT
9.5	7.0	4.9	mW/℃

When used at Ta=25[°C] or above, values of above are reduced per 1[°C].
Allowable loss is the value for mounting 70[mm] x 70[mm] x 1.6[mm] FR4 glass epoxy circuit board (copper foil area is 3% or less).

●Input / Output Equivalent Circuits

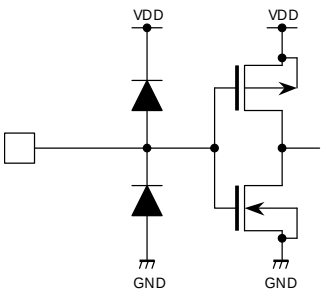

＜Input＞

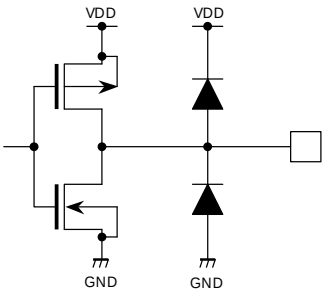

＜Output＞

© 2011 ROHM Co., Ltd. All rights reserved.

●Electrical Characteristics(BU4001B)(Unless otherwise noted, VSS=0V, Ta=25℃, CL=50pF)

	Parameter	Symbol	Standard Value			Unit		Condition	Fig.No
			MIN	TYP	MAX		VDD[V]		
DC Characteristics	Input “H” voltage	VIH	3.5	—	—	V	5	—	1
			7.0	—	—		10		2
			11.0	—	—		15		3
	Input “L” voltage	VIL	—	—	1.5	V	5	—	1
			—	—	3.0		10		2
			—	—	4.0		15		3
	Input “H” current	IIH	—	—	0.3	μA	15	VIH=15[V]	—
	Input “L” current	IIL	—	—	-0.3	μA	15	VIL=0[V]	—
	Output “H” voltage	VOH	4.95	—	—	V	5	IO=0[mA]	1
			9.95	—	—		10		2
			14.95	—	—		15		3
	Output “L” voltage	VOL	—	—	0.05	V	5	IO=0[mA]	1
			—	—	0.05		10		2
			—	—	0.05		15		3
	Output “H” current	IOH	-0.16	—	—	mA	5	VOH=4.6[V]	4
			-0.4	—	—		10	VOH=9.5[V]	
			-1.2	—	—		15	VOH=13.5[V]	
	Output “L” current	IOL	0.44	—	—	mA	5	VOL=0.4[V]	5
			1.1	—	—		10	VOL=0.5[V]	
			3.0	—	—		15	VOL=1.5[V]	
	Static supply current	IDD	—	—	1	μA	5	VI=VDD or GND	—
			—	—	2		10		
			—	—	4		15		

	Parameter	Symbol	Standard Value			Unit		Condition	Fig.No
			MIN	TYP	MAX		VDD[V]		
Switching Characteristics	Output rising time	tTLH	—	180	—	ns	5	—	6
			—	90	—		10		
			—	65	—		15		
	Output falling time	tTHL	—	100	—	ns	5	—	7
			—	50	—		10		
			—	40	—		15		
	“L” to ”H” Propagation delay time	tPLH	—	90	—	ns	5	—	8
			—	50	—		10		
			—	40	—		15		
	“H” to ”L” Propagation delay time	tPHL	—	90	—	ns	5	—	9
			—	50	—		10		
			—	40	—		15		
	Input capacitance	CIN	—	5	—	pF	—	—	—

© 2011 ROHM Co., Ltd. All rights reserved.

●Electrical Characteristics(BU4011B)(Unless otherwise noted, VSS=0V, Ta=25℃, CL=50pF)

	Parameter	Symbol	Standard Value			Unit		Condition	Fig.No
			MIN	TYP	MAX		VDD[V]		
DC Characteristics	Input “H” voltage	VIH	3.5	—	—	V	5	—	10
			7.0	—	—		10		11
			11.0	—	—		15		12
	Input “L” voltage	VIL	—	—	1.5	V	5	—	10
			—	—	3.0		10		11
			—	—	4.0		15		12
	Input “H” current	IIH	—	—	0.3	μA	15	VIH=15[V]	—
	Input “L” current	IIL	—	—	-0.3	μA	15	VIL=0[V]	—
	Output “H” voltage	VOH	4.95	—	—	V	5	IO=0[mA]	10
			9.95	—	—		10		11
			14.95	—	—		15		12
	Output “L” voltage	VOL	—	—	0.05	V	5	IO=0[mA]	10
			—	—	0.05		10		11
			—	—	0.05		15		12
	Output “H” current	IOH	-0.16	—	—	mA	5	VOH=4.6[V]	13
			-0.4	—	—		10	VOH=9.5[V]	
			-1.2	—	—		15	VOH=13.5[V]	
	Output “L” current	IOL	0.44	—	—	mA	5	VOL=0.4[V]	14
			1.1	—	—		10	VOL=0.5[V]	
			3.0	—	—		15	VOL=1.5[V]	
	Static supply current	IDD	—	—	1	μA	5	VI=VDD or GND	—
			—	—	2		10		
			—	—	4		15		

	Parameter	Symbol	Standard Value			Unit		Condition	Fig.No
			MIN	TYP	MAX		VDD[V]		
Switching Characteristics	Output rising time	tTLH	—	180	—	ns	5	—	15
			—	90	—		10		
			—	65	—		15		
	Output falling time	tTHL	—	100	—	ns	5	—	16
			—	50	—		10		
			—	40	—		15		
	“L” to ”H” Propagation delay time	tPLH	—	90	—	ns	5	—	17
			—	50	—		10		
			—	40	—		15		
	“H” to ”L” Propagation delay time	tPHL	—	90	—	ns	5	—	18
			—	50	—		10		
			—	40	—		15		
	Input capacitance	CIN	—	5	—	pF	—	—	—

© 2011 ROHM Co., Ltd. All rights reserved.

●Electrical Characteristics(BU4030B/ BU4070B)(Unless otherwise noted, VSS=0V, Ta=25℃, CL=50pF)

	Parameter	Symbol	Standard Value			Unit		Condition	Fig.No
			MIN	TYP	MAX		VDD[V]		
DC Characteristics	Input “H” voltage	VIH	3.5	—	—	V	5	—	19
			7.0	—	—		10		20
			11.0	—	—		15		21
	Input “L” voltage	VIL	—	—	1.5	V	5	—	19
			—	—	3.0		10		20
			—	—	4.0		15		21
	Input “H” current	IIH	—	—	0.3	μA	15	VIH=15[V]	—
	Input “L” current	IIL	—	—	-0.3	μA	15	VIL=0[V]	—
	Output “H” voltage	VOH	4.95	—	—	V	5	IO=0[mA]	19
			9.95	—	—		10		20
			14.95	—	—		15		21
	Output “L” voltage	VOL	—	—	0.05	V	5	IO=0[mA]	19
			—	—	0.05		10		20
			—	—	0.05		15		21
	Output “H” current	IOH	-0.16	—	—	mA	5	VOH=4.6[V]	22
			-0.4	—	—		10	VOH=9.5[V]	
			-1.2	—	—		15	VOH=13.5[V]	
	Output “L” current	IOL	0.44	—	—	mA	5	VOL=0.4[V]	23
			1.1	—	—		10	VOL=0.5[V]	
			3.0	—	—		15	VOL=1.5[V]	
	Static supply current	IDD	—	—	1	μA	5	VI=VDD or GND	—
			—	—	2		10		
			—	—	4		15		

	Parameter	Symbol	Standard Value			Unit		Condition	Fig.No
			MIN	TYP	MAX		VDD[V]		
Switching Characteristics	Output rising time	tTLH	—	180	—	ns	5	—	24
			—	90	—		10		
			—	65	—		15		
	Output falling time	tTHL	—	100	—	ns	5	—	25
			—	50	—		10		
			—	40	—		15		
	“L” to ”H” Propagation delay time	tPLH	—	90	—	ns	5	—	26
			—	50	—		10		
			—	40	—		15		
	“H” to ”L” Propagation delay time	tPHL	—	90	—	ns	5	—	27
			—	50	—		10		
			—	40	—		15		
	Input capacitance	CIN	—	5	—	pF	—	—	—

© 2011 ROHM Co., Ltd. All rights reserved.

●Electrical Characteristics(BU4081B)(Unless otherwise noted, VSS=0V, Ta=25℃, CL=50pF)

	Parameter	Symbol	Standard Value			Unit		Condition	Fig.No
			MIN	TYP	MAX		VDD[V]		
DC Characteristics	Input “H” voltage	VIH	3.5	—	—	V	5	—	28
			7.0	—	—		10		29
			11.0	—	—		15		30
	Input “L” voltage	VIL	—	—	1.5	V	5	—	28
			—	—	3.0		10		29
			—	—	4.0		15		30
	Input “H” current	IIH	—	—	0.3	μA	15	VIH=15[V]	—
	Input “L” current	IIL	—	—	-0.3	μA	15	VIL=0[V]	—
	Output “H” voltage	VOH	4.95	—	—	V	5	IO=0[mA]	28
			9.95	—	—		10		29
			14.95	—	—		15		30
	Output “L” voltage	VOL	—	—	0.05	V	5	IO=0[mA]	28
			—	—	0.05		10		29
			—	—	0.05		15		30
	Output “H” current	IOH	-0.16	—	—	mA	5	VOH=4.6[V]	31
			-0.4	—	—		10	VOH=9.5[V]	
			-1.2	—	—		15	VOH=13.5[V]	
	Output “L” current	IOL	0.44	—	—	mA	5	VOL=0.4[V]	32
			1.1	—	—		10	VOL=0.5[V]	
			3.0	—	—		15	VOL=1.5[V]	
	Static supply current	IDD	—	—	1	μA	5	VI=VDD or GND	—
			—	—	2		10		
			—	—	4		15		

	Parameter	Symbol	Standard Value			Unit		Condition	Fig.No
			MIN	TYP	MAX		VDD[V]		
Switching Characteristics	Output rising time	tTLH	—	180	—	ns	5	—	33
			—	90	—		10		
			—	65	—		15		
	Output falling time	tTHL	—	100	—	ns	5	—	34
			—	50	—		10		
			—	40	—		15		
	“L” to ”H” Propagation delay time	tPLH	—	160	—	ns	5	—	35
			—	65	—		10		
			—	50	—		15		
	“H” to ”L” Propagation delay time	tPHL	—	160	—	ns	5	—	36
			—	65	—		10		
			—	50	—		15		
	Input capacitance	CIN	—	5	—	pF	—	—	—

© 2011 ROHM Co., Ltd. All rights reserved.

●Electrical Characteristics(BU4093B)(Unless otherwise noted, VSS=0V, Ta=25℃, CL=50pF)

	Parameter	Symbol	Standard Value			Unit		Condition	Fig.No
			MIN	TYP	MAX		VDD[V]		
DC Characteristics	Input “H” voltage	VIH	3.5	–	–	V	5	–	37
			7.0	–	–		10		38
			11.0	–	–		15		39
	Input “L” voltage	VIL	–	–	1.5	V	5	–	37
			–	–	3.0		10		38
			–	–	4.0		15		39
	Input “H” current	IIH	–	–	0.3	μA	15	VIH=15[V]	–
	Input “L” current	IIL	–	–	-0.3	μA	15	VIL=0[V]	–
	Output “H” voltage	VOH	4.95	–	–	V	5	IO=0[mA]	37
			9.95	–	–		10		38
			14.95	–	–		15		39
	Output “L” voltage	VOL	–	–	0.05	V	5	IO=0[mA]	37
			–	–	0.05		10		38
			–	–	0.05		15		39
	Output “H” current	IOH	-0.44	–	–	mA	5	VOH=4.6[V]	40
			-1.1	–	–		10	VOH=9.5[V]	
			-3.0	–	–		15	VOH=13.5[V]	
	Output “L” current	IOL	0.44	–	–	mA	5	VOL=0.4[V]	41
			1.1	–	–		10	VOL=0.5[V]	
			3.0	–	–		15	VOL=1.5[V]	
	Static supply current	IDD	–	–	1	μA	5	VI=VDD or GND	–
			–	–	2		10		
			–	–	4		15		
	Hysteresis voltage	VH	0.17	–	0.39	μA	5	–	–
			0.25	–	0.60		10		
			0.33	–	0.90		15		

	Parameter	Symbol	Standard Value			Unit		Condition	Fig.No
			MIN	TYP	MAX		VDD[V]		
Switching Characteristics	Output rising time	tTLH	–	100	–	ns	5	–	42
			–	50	–		10		
			–	40	–		15		
	Output falling time	tTHL	–	100	–	ns	5	–	43
			–	50	–		10		
			–	40	–		15		
	“L” to ”H” Propagation delay time	tPLH	–	125	–	ns	5	–	44
			–	50	–		10		
			–	40	–		15		
	“H” to ”L” Propagation delay time	tPHL	–	125	–	ns	5	–	45
			–	50	–		10		
			–	40	–		15		
	Input capacitance	CIN	–	5	–	pF	–	–	–

© 2011 ROHM Co., Ltd. All rights reserved.

●Electrical Characteristics(BU4069UB)(Unless otherwise noted, VSS=0V, Ta=25℃, CL=50pF)

	Parameter	Symbol	Standard Value			Unit		Condition	Fig.No
			MIN	TYP	MAX		VDD[V]		
DC Characteristics	Input “H” voltage	VIH	4.0		—	V	5	—	46
			8.0		—		10		47
			12.5		—		15		48
	Input “L” voltage	VIL	—	—	1.0	V	5	—	46
			—	—	2.0		10		47
			—	—	2.5		15		48
	Input “H” current	IIH	—	—	0.3	μA	15	VIH=15[V]	—
	Input “L” current	IIL	—	—	-0.3	μA	15	VIL=0[V]	—
	Output “H” voltage	VOH	4.95	—	—	V	5	IO=0[mA]	46
			9.95	—	—		10		47
			14.95	—	—		15		48
	Output “L” voltage	VOL	—	—	0.05	V	5	IO=0[mA]	46
			—	—	0.05		10		47
			—	—	0.05		15		48
	Output “H” current	IOH	-0.44	—		mA	5	VOH=4.6[V]	49
			-1.1	—			10	VOH=9.5[V]	
			-3.0	—			15	VOH=13.5[V]	
	Output “L” current	IOL	0.44	—		mA	5	VOL=0.4[V]	50
			1.1	—			10	VOL=0.5[V]	
			3.0	—			15	VOL=1.5[V]	
	Static supply current	IDD	—	—	1	μA	5	VI=VDD or GND	—
			—	—	2		10		
			—	—	4		15		

	Parameter	Symbol	Standard Value			Unit		Condition	Fig.No
			MIN	TYP	MAX		VDD[V]		
Switching Characteristics	Output rising time	tTLH	—	180	—	ns	5	—	51
			—	90	—		10		
			—	65	—		15		
	Output falling time	tTHL	—	100	—	ns	5	—	52
			—	50	—		10		
			—	40	—		15		
	“L” to ”H” Propagation delay time	tPLH	—	90	—	ns	5	—	53
			—	50	—		10		
			—	40	—		15		
	“H” to ”L” Propagation delay time	tPHL	—	65	—	ns	5	—	54
			—	40	—		10		
			—	30	—		15		
	Input capacitance	CIN	—	5	—	pF	—	—	—

© 2011 ROHM Co., Ltd. All rights reserved.

●Electrical Characteristics(BU4584B)(Unless otherwise noted, VSS=0V, Ta=25℃, CL=50pF)

	Parameter	Symbol	Standard Value			Unit		Condition	Fig.No
			MIN	TYP	MAX		VDD[V]		
DC Characteristics	Input “H” voltage	VIH	3.5	—	—	V	5	—	55
			7.0	—	—		10		56
			11.0	—	—		15		57
	Input “L” voltage	VIL	—	—	1.5	V	5	—	55
			—	—	3.0		10		56
			—	—	4.0		15		57
	Input “H” current	IIH	—	—	0.3	μA	15	VIH=15[V]	—
	Input “L” current	IIL	—	—	-0.3	μA	15	VIL=0[V]	—
	Output “H” voltage	VOH	4.95	—	—	V	5	IO=0[mA]	55
			9.95	—	—		10		56
			14.95	—	—		15		57
	Output “L” voltage	VOL	—	—	0.05	V	5	IO=0[mA]	55
			—	—	0.05		10		56
			—	—	0.05		15		57
	Output “H” current	IOH	-0.44	—	—	mA	5	VOH=4.6[V]	58
			-1.1	—	—		10	VOH=9.5[V]	
			-3.0	—	—		15	VOH=13.5[V]	
	Output “L” current	IOL	0.44	—	—	mA	5	VOL=0.4[V]	59
			1.1	—	—		10	VOL=0.5[V]	
			3.0	—	—		15	VOL=1.5[V]	
	Static supply current	IDD	—	—	1	μA	5	—	—
			—	—	2		10		
			—	—	4		15		
	Hysteresis voltage	VH	0.15	—	0.6	μA	5	—	—
			0.25	—	1.0		10		
			0.40	—	1.5		15		
	Input capacitance	CIN	—	5	—	pF	—	—	—

	Parameter	Symbol	Standard Value			Unit		Condition	Fig.No
			MIN	TYP	MAX		VDD[V]		
Switching Characteristics	Output rising time	tTLH	—	100	—	ns	5	—	60
			—	50	—		10		
			—	40	—		15		
	Output falling time	tTHL	—	100	—	ns	5	—	61
			—	50	—		10		
			—	40	—		15		
	“L” to ”H” Propagation delay time	tPLH	—	125	—	ns	5	—	62
			—	60	—		10		
			—	50	—		15		
	“H” to ”L” Propagation delay time	tPHL	—	125	—	ns	5	—	63
			—	60	—		10		
			—	50	—		15		

© 2011 ROHM Co., Ltd. All rights reserved.

●Switching Characteristics

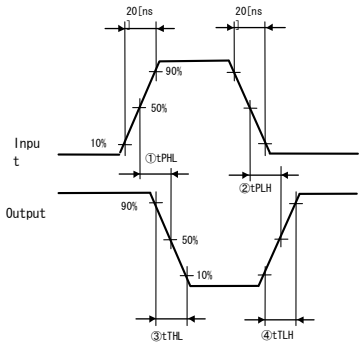

Description of Symbols

(1) tPHL: Time up to 50% of rise time of input waveform
~ 50% of fall time of output waveform
(2) tPLH: Time up to 50% of fall time of input waveform
~ 50% of rise time of output waveform
(3) tTHL: Time up to 90% ~ 10% of fall time of output waveform
(4) tTLH: Time up to 10% ~ 90% of rise time of output waveform

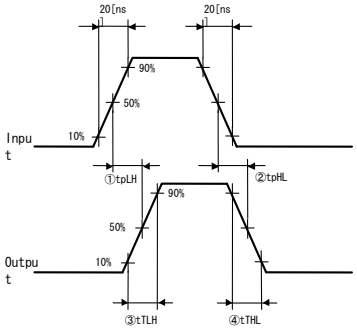

Description of Symbols

(1) tPLH: Time up to 50% of rise time of input waveform
~50% of rise time of output waveform
(2) tPHL: Time up to 50% of fall time of input waveform
~ 50% of fall time of output waveform
(3) tTLH: Time up to 10% ~ 90% of rise time of output waveform
(4) tTHL: Time up to 90% ~ 10% of fall time of output waveform

© 2011 ROHM Co., Ltd. All rights reserved.

●Electrical Characteristics Curves(BU4001B)

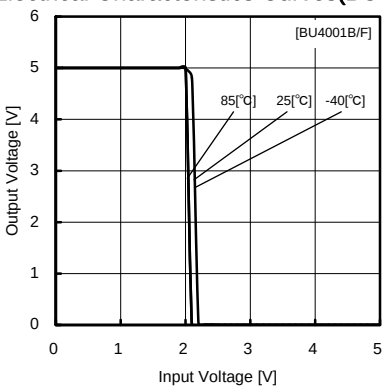

Fig.1
Output voltage－Input voltage characteristics
（VDD=5[V] / VSS=0[V]）

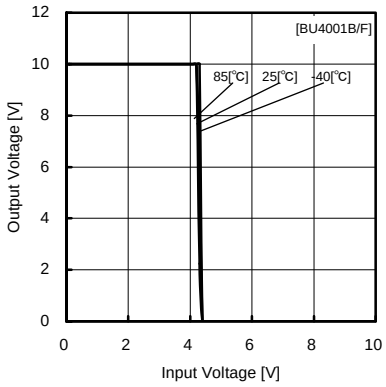

Fig.2
Output voltage－Input voltage characteristics
（VDD=10[V] / VSS=0[V]）

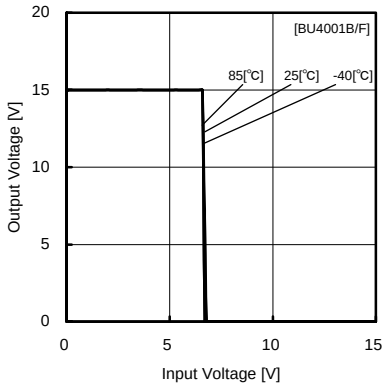

Fig.3
Output voltage－Input voltage characteristics
（VDD=15[V] / VSS=0[V]）

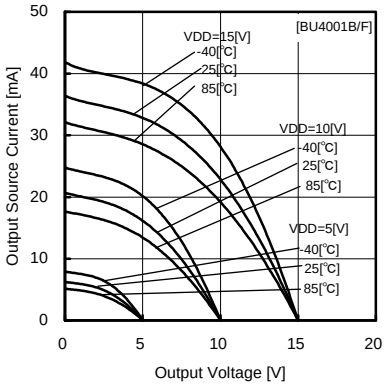

Fig.4
Output source current－voltage characteristics

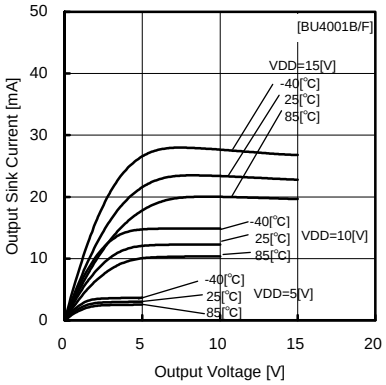

Fig.5
Output sink current－voltage characteristics

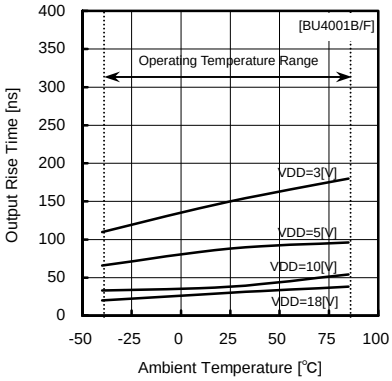

Fig.6
Rising time tTLH

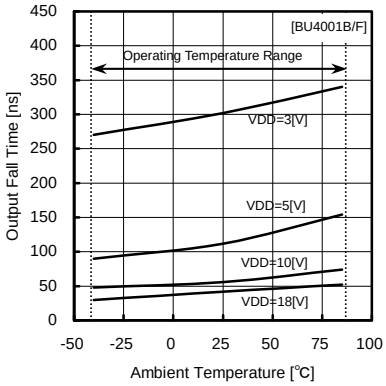

Fig.7
Falling time tTHL

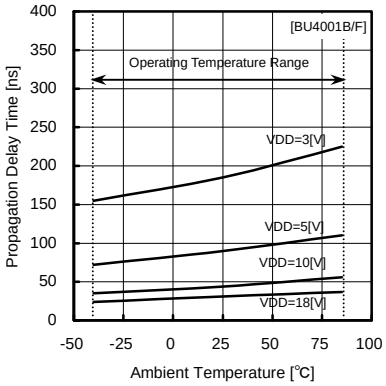

Fig.8
Rising propagation delay tPLH

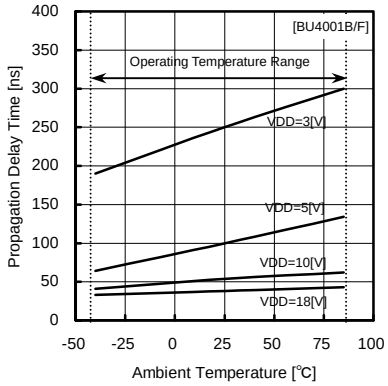

Fig.9
Falling propagation delay tPHL

© 2011 ROHM Co., Ltd. All rights reserved.

●Electrical Characteristics Curves(BU4011B)

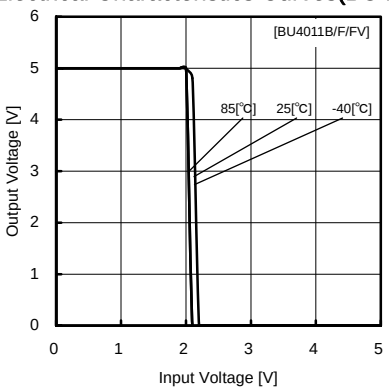

Fig.10
Output voltage－Input voltage characteristics
（VDD=5[V] / VSS=0[V]）

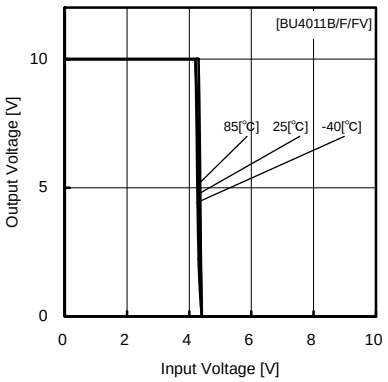

Fig.11
Output voltage－Input voltage characteristics
（VDD=10[V] / VSS=0[V]）

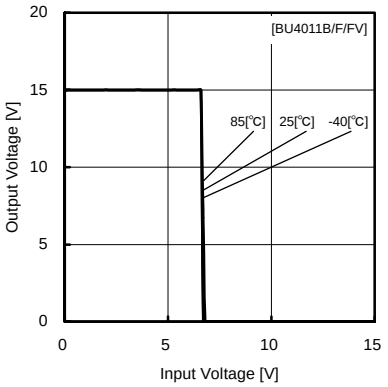

Fig.12
Output voltage－Input voltage characteristics
（VDD=15[V] / VSS=0[V]）

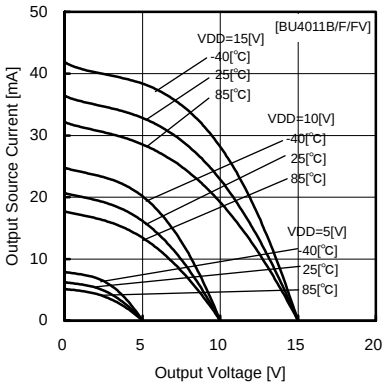

Fig.13
Output source current－voltage characteristics

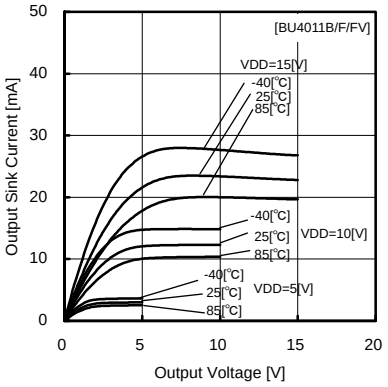

Fig.14
Output sink current－voltage characteristics

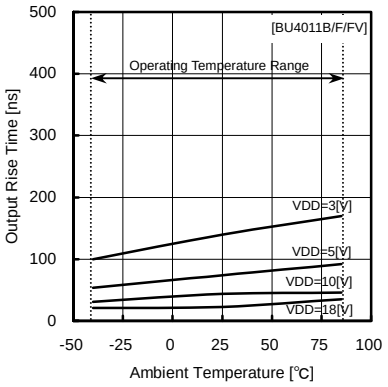

Fig.15
Rising time tTLH

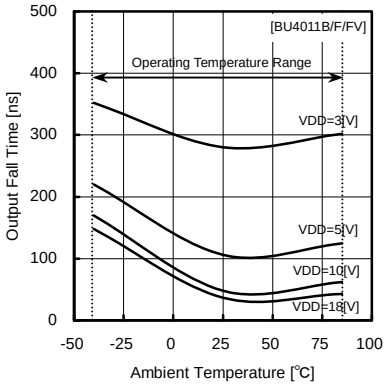

Fig.16
Falling time tTHL

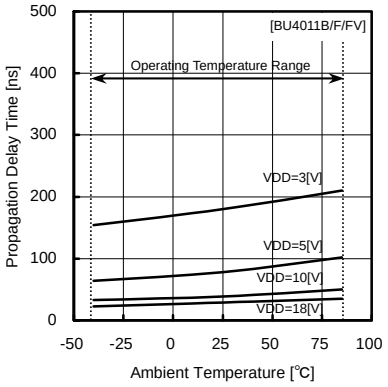

Fig.17
Rising propagation delay tPLH

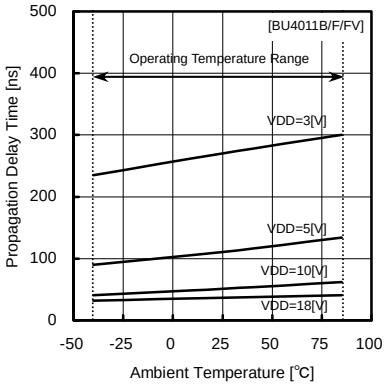

Fig.18
Falling propagation delay tPHL

© 2011 ROHM Co., Ltd. All rights reserved.

●Electrical Characteristics Curves(BU4030B / BU4070B)

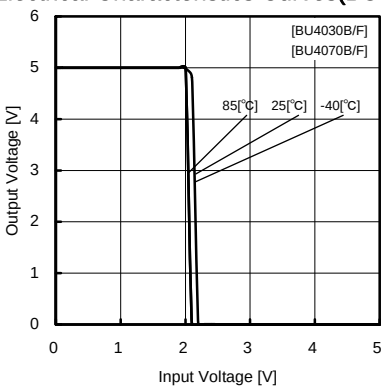

Fig.19
Output voltage－Input voltage characteristics
（VDD=5[V] / VSS=0[V]）

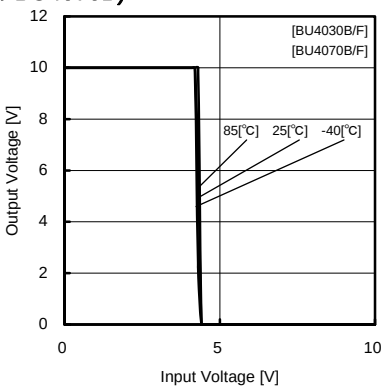

Fig.20
Output voltage－Input voltage characteristics
（VDD=10[V] / VSS=0[V]）

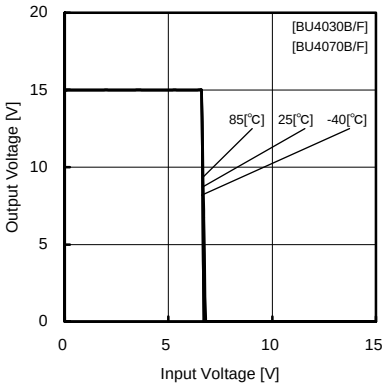

Fig.21
Output voltage－Input voltage characteristics
（VDD=15[V] / VSS=0[V]）

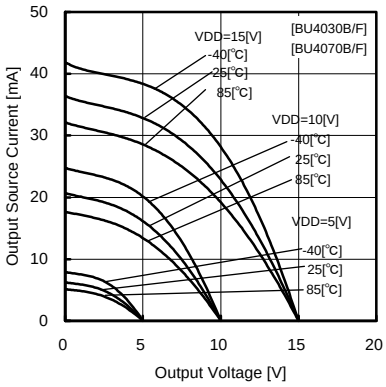

Fig.22
Output source current－voltage characteristics

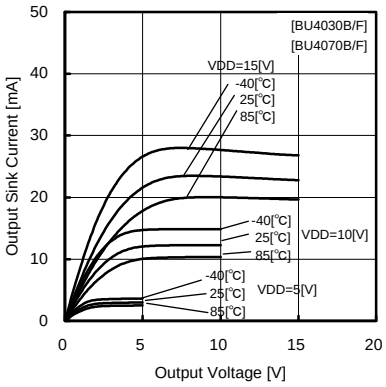

Fig.23
Output sink current－voltage characteristics

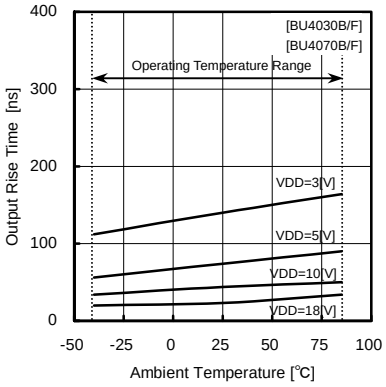

Fig.24
Rising time tTLH

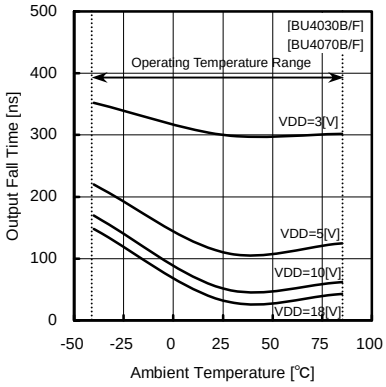

Fig.25
Falling time tTHL

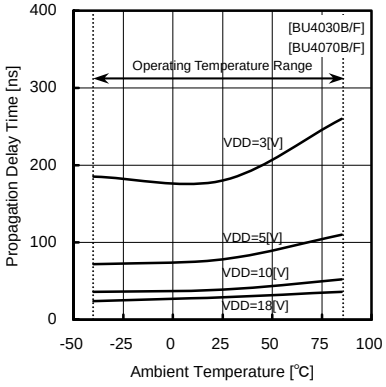

Fig.26
Rising propagation delay tPLH

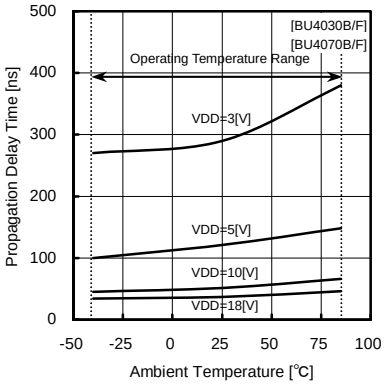

Fig.27
Falling propagation delay tPHL

© 2011 ROHM Co., Ltd. All rights reserved.

●Electrical Characteristics Curves(BU4081B)

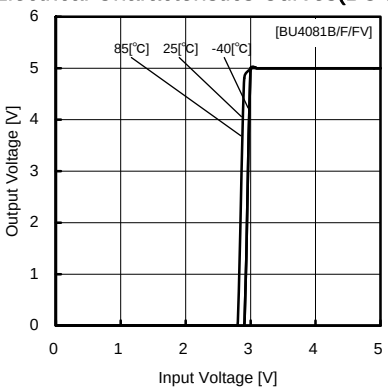

Fig.28
Output voltage－Input voltage characteristics
（VDD=5[V] / VSS=0[V]）

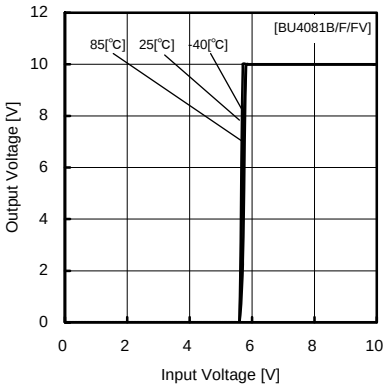

Fig.29
Output voltage－Input voltage characteristics
（VDD=10[V] / VSS=0[V]）

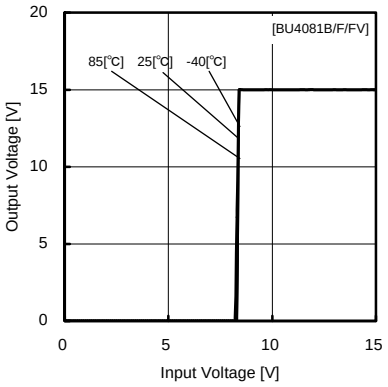

Fig.30
Output voltage－Input voltage characteristics
（VDD=15[V] / VSS=0[V]）

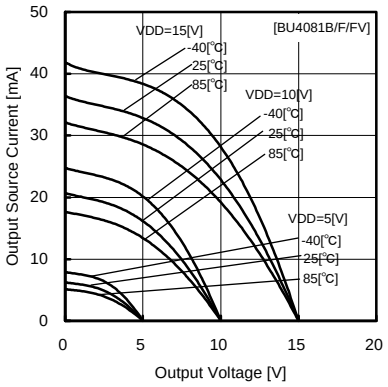

Fig.31
Output source current－voltage characteristics

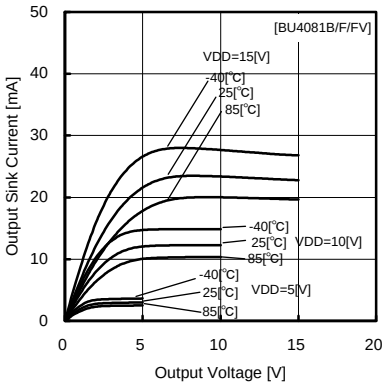

Fig.32
Output sink current－voltage characteristics

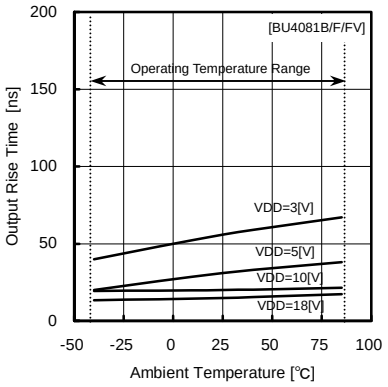

Fig.33
Rising time tTLH

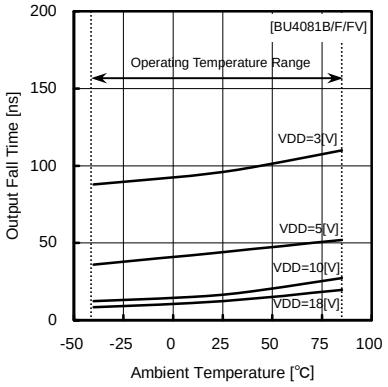

Fig.34
Falling time tTHL

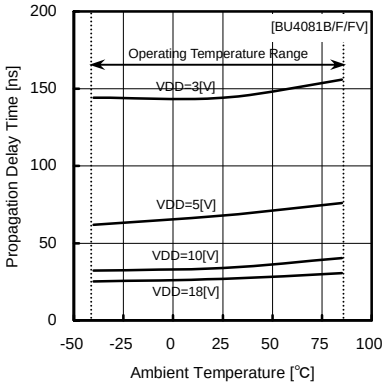

Fig.35
Rising propagation delay tPLH

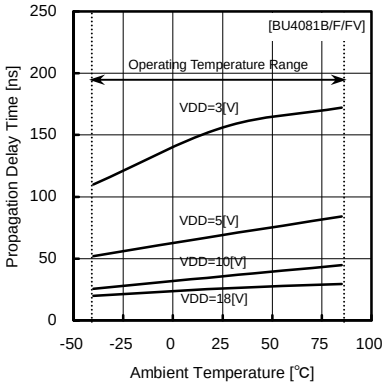

Fig.36
Falling propagation delay tPHL

© 2011 ROHM Co., Ltd. All rights reserved.

●Electrical Characteristics Curves(BU4093B)

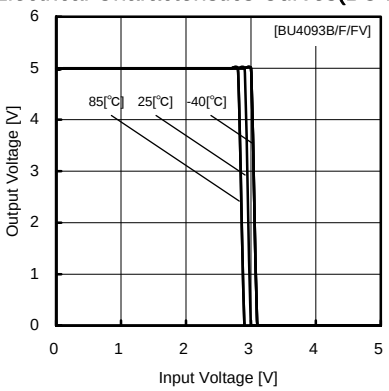

Fig.37
Output voltage－Input voltage characteristics
（VDD=5[V] / VSS=0[V]）

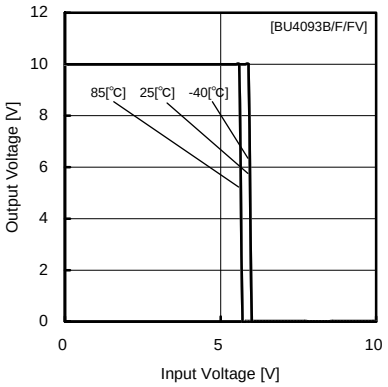

Fig.38
Output voltage－Input voltage characteristics
（VDD=10[V] / VSS=0[V]）

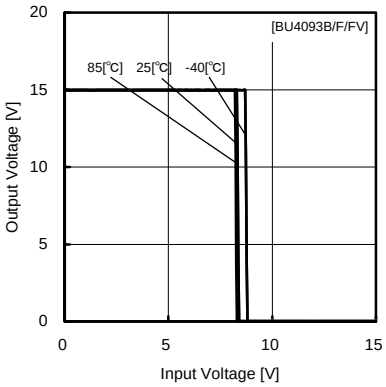

Fig.39
Output voltage－Input voltage characteristics
（VDD=15[V] / VSS=0[V]）

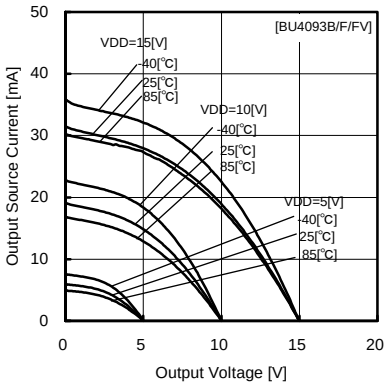

Fig.40
Output source current－voltage characteristics

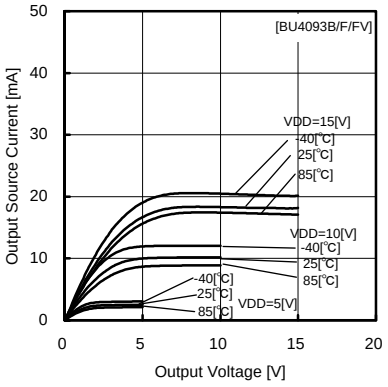

Fig.41
Output sink current－voltage characteristics

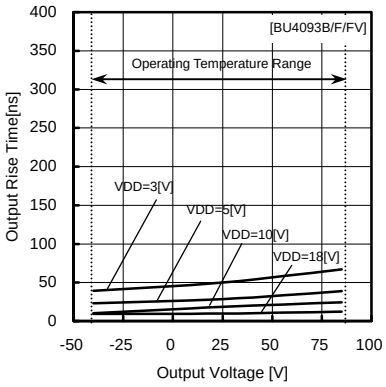

Fig.42
Rising time tTLH

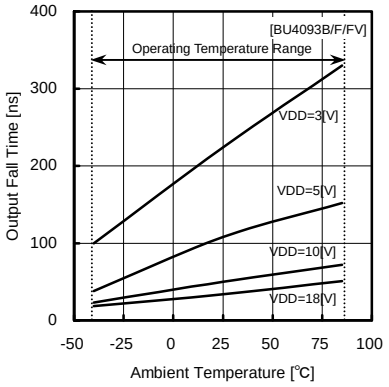

Fig.43
Falling time tTHL

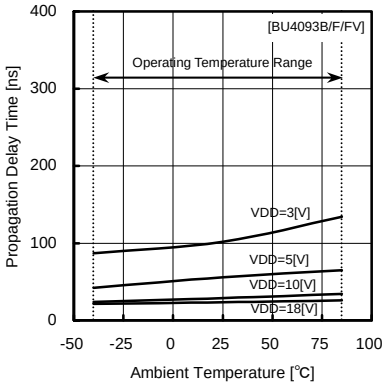

Fig.44
Rising propagation delay tPLH

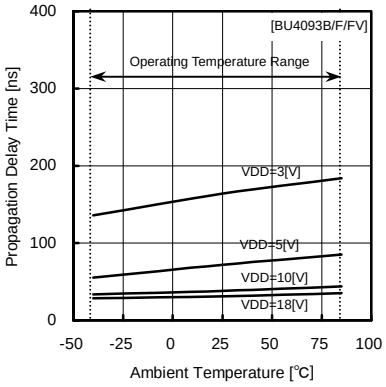

Fig.45
Falling propagation delay tPHL

© 2011 ROHM Co., Ltd. All rights reserved.

●Electrical Characteristics Curves(BU4069UB)

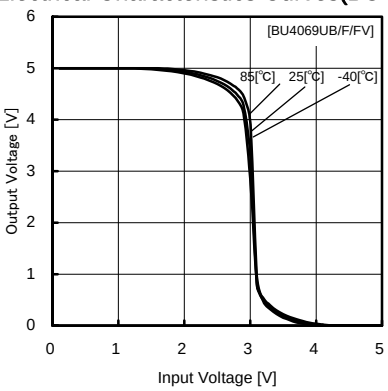

Fig.46
Output voltage－Input voltage characteristics
（VDD=5[V] / VSS=0[V]）

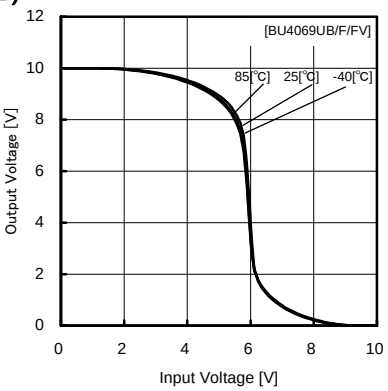

Fig.47
Output voltage－Input voltage characteristics
（VDD=10[V] / VSS=0[V]）

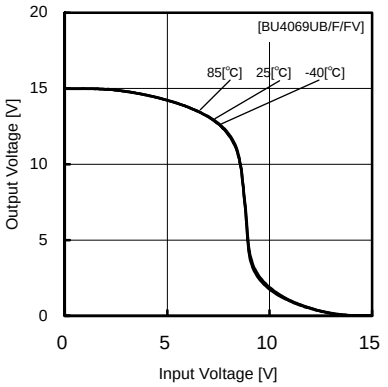

Fig.48
Output voltage－Input voltage characteristics
（VDD=15[V] / VSS=0[V]）

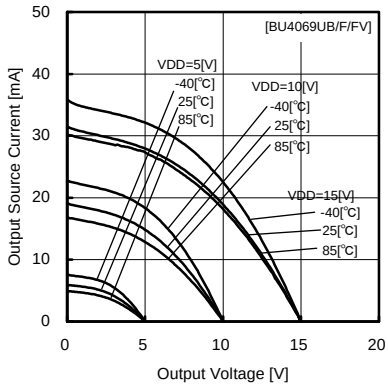

Fig.49
Output source current－voltage characteristics

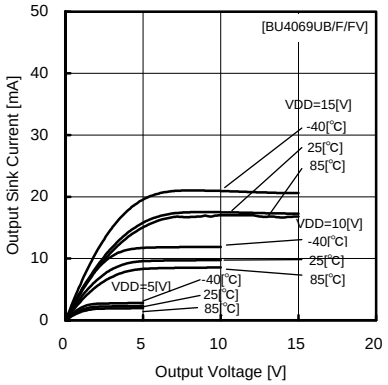

Fig.50
Output sink current－voltage characteristics

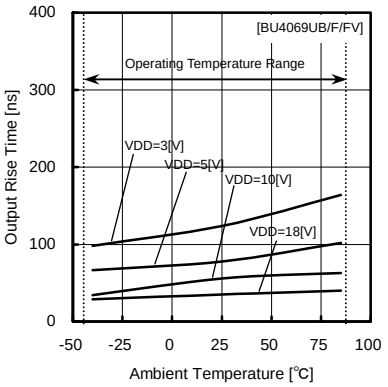

Fig.51
Rising time tTLH

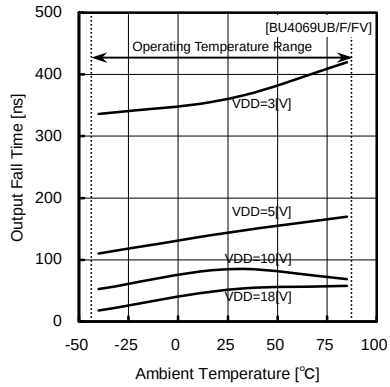

Fig.52
Falling time tTHL

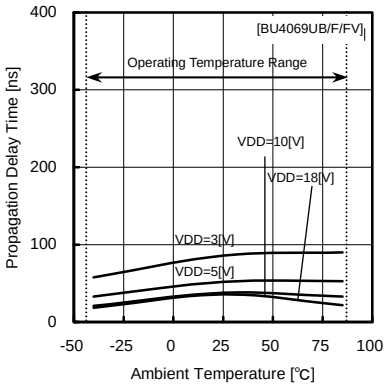

Fig.53
Rising propagation delay tPLH

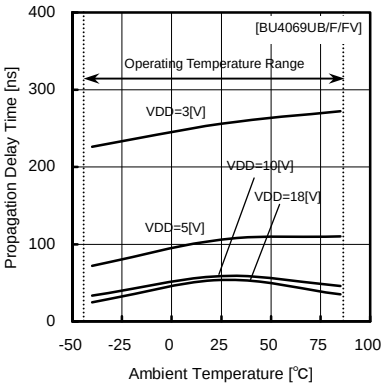

Fig.54
Falling propagation delay tPHL

© 2011 ROHM Co., Ltd. All rights reserved.

●Electrical Characteristics Curves(BU4584B)

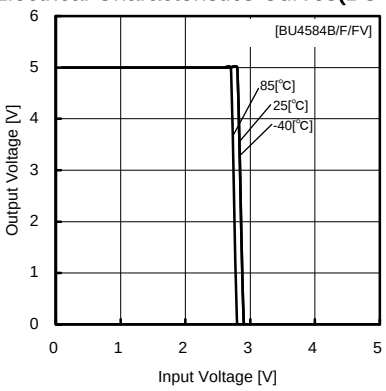

Fig.55
Output voltage－Input voltage characteristics
（VDD=5[V] / VSS=0[V]）

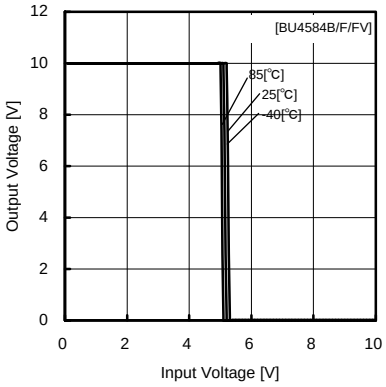

Fig.56
Output voltage－Input voltage characteristics
（VDD=10[V] / VSS=0[V] ）

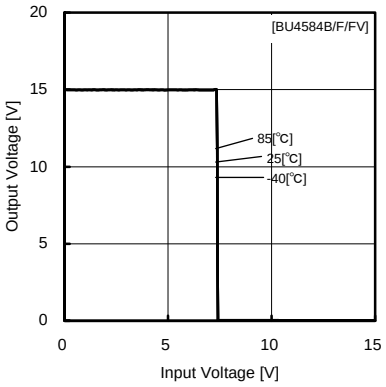

Fig.57
Output voltage－Input voltage characteristics
（VDD=15[V] / VSS=0[V]）

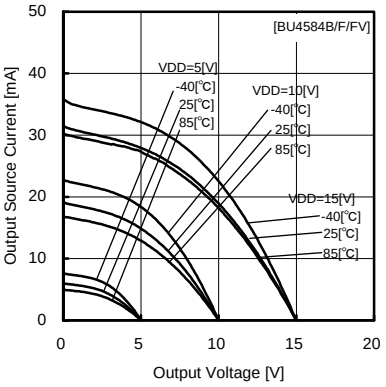

Fig.58
Output source current－voltage characteristics

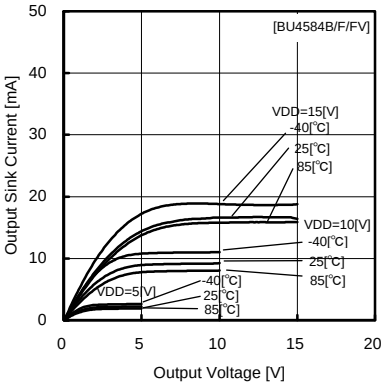

Fig.59
Output sink current－voltage characteristics

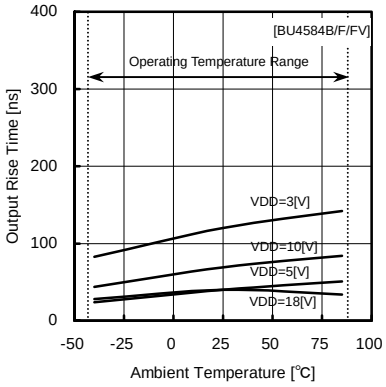

Fig.60
Rising time tTLH

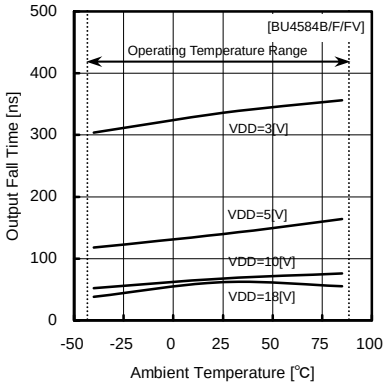

Fig.61
Falling time tTHL

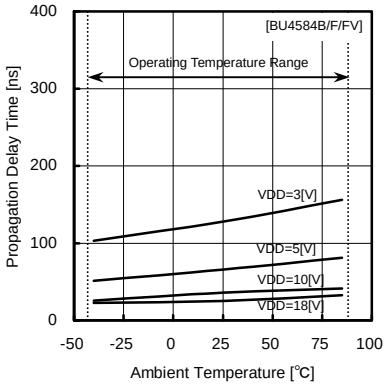

Fig.62
Rising propagation delay tPLH

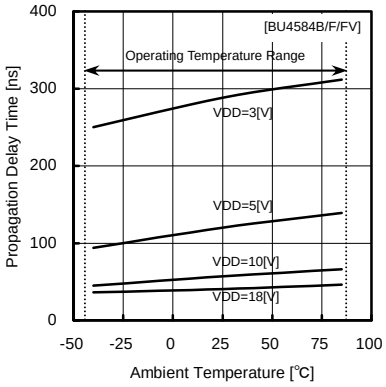

Fig.63
Falling propagation delay tPHL

© 2011 ROHM Co., Ltd. All rights reserved.

●Pinout Diagrams・Pin Description

1) BU4001B Series

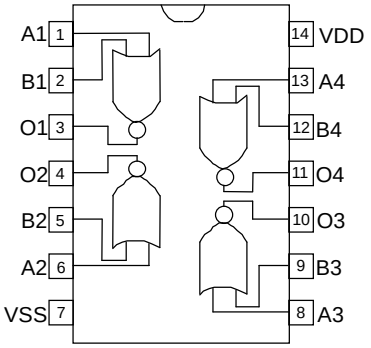

PIN No.	PIN NAME	I/O	PIN FUNCTION
1	A1	I	INPUT1
2	B1	I	INPUT1
3	O1	O	OUTPUT1
4	O2	O	OUTPUT2
5	B2	I	INPUT2
6	A2	I	INPUT2
7	VSS	—	Power Supply(-)
8	A3	I	INPUT3
9	B3	I	INPUT3
10	O3	O	OUTPUT3
11	O4	O	OUTPUT4
12	B4	I	INPUT4
13	A4	I	INPUT4
14	VDD	—	Power Supply(+)

TRUTH TABLE

A	B	OUT
L	L	H
L	H	L
H	L	L
H	H	L

2) BU4011B Series

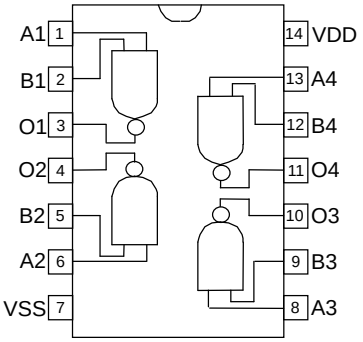

PIN No.	PIN NAME	I/O	PIN FUNCTION
1	A1	I	INPUT1
2	B1	I	INPUT1
3	O1	O	OUTPUT1
4	O2	O	OUTPUT2
5	B2	I	INPUT2
6	A2	I	INPUT2
7	VSS	—	Power Supply(-)
8	A3	I	INPUT3
9	B3	I	INPUT3
10	O3	O	OUTPUT3
11	O4	O	OUTPUT4
12	B4	I	INPUT4
13	A4	I	INPUT4
14	VDD	—	Power Supply(+)

TRUTH TABLE

A	B	OUT
L	L	H
L	H	H
H	L	H
H	H	L

3) BU4030B Series

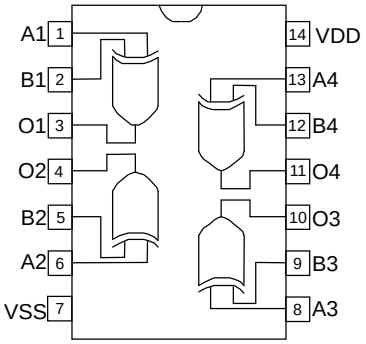

PIN No.	PIN NAME	I/O	PIN FUNCTION
1	A1	I	INPUT1
2	B1	I	INPUT1
3	O1	O	OUTPUT1
4	O2	O	OUTPUT2
5	B2	I	INPUT2
6	A2	I	INPUT2
7	VSS	—	Power Supply(-)
8	A3	I	INPUT3
9	B3	I	INPUT3
10	O3	O	OUTPUT3
11	O4	O	OUTPUT4
12	B4	I	INPUT4
13	A4	I	INPUT4
14	VDD	—	Power Supply(+)

TRUTH TABLE

A	B	OUT
L	L	L
L	H	H
H	L	H
H	H	L

4) BU4070B Series

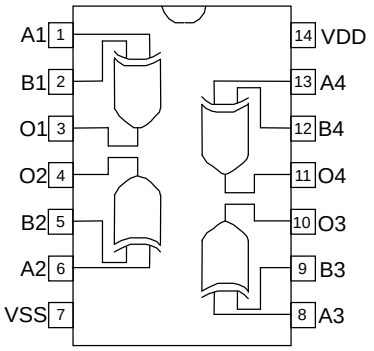

PIN No.	PIN NAME	I/O	PIN FUNCTION
1	A1	I	INPUT1
2	B1	I	INPUT1
3	O1	O	OUTPUT1
4	O2	O	OUTPUT2
5	B2	I	INPUT2
6	A2	I	INPUT2
7	VSS	—	Power Supply(-)
8	A3	I	INPUT3
9	B3	I	INPUT3
10	O3	O	OUTPUT3
11	O4	O	OUTPUT4
12	B4	I	INPUT4
13	A4	I	INPUT4
14	VDD	—	Power Supply(+)

TRUTH TABLE

A	B	OUT
L	L	L
L	H	H
H	L	H
H	H	L

5) BU4081B Series

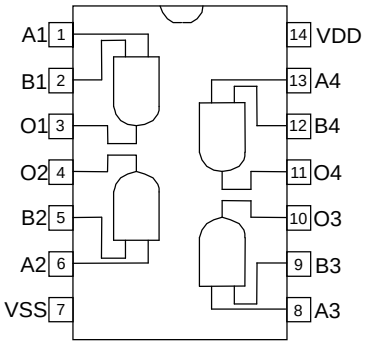

PIN No.	PIN NAME	I/O	PIN FUNCTION
1	A1	I	INPUT1
2	B1	I	INPUT1
3	O1	O	OUTPUT1
4	O2	O	OUTPUT2
5	B2	I	INPUT2
6	A2	I	INPUT2
7	VSS	—	Power Supply(-)
8	A3	I	INPUT3
9	B3	I	INPUT3
10	O3	O	OUTPUT3
11	O4	O	OUTPUT4
12	B4	I	INPUT4
13	A4	I	INPUT4
14	VDD	—	Power Supply(+)

TRUTH TABLE

A	B	OUT
L	L	L
L	H	L
H	L	L
H	H	H

6) BU4093B Series

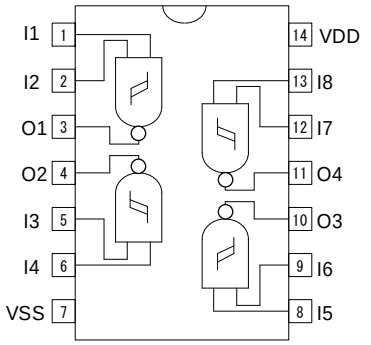

PIN No.	PIN NAME	I/O	PIN FUNCTION
1	I1	I	INPUT1
2	I2	I	INPUT2
3	O1	O	OUTPUT1
4	O2	O	OUTPUT2
5	I3	I	INPUT3
6	I4	I	INPUT4
7	VSS	—	Power Supply(-)
8	I5	I	INPUT5
9	I6	I	INPUT6
10	O3	O	OUTPUT3
11	O4	O	OUTPUT4
12	I7	I	INPUT7
13	I8	I	INPUT8
14	VDD	—	Power Supply(+)

TRUTH TABLE

A	B	OUT
L	L	H
L	H	H
H	L	H
H	H	L

© 2011 ROHM Co., Ltd. All rights reserved.

7) BU4069UB Series

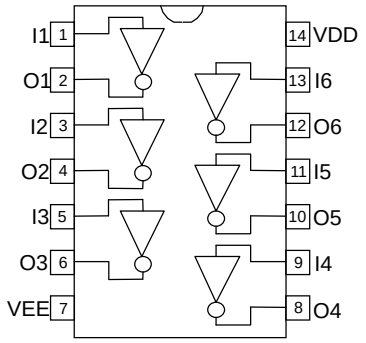

PIN No.	PIN NAME	I/O	PIN FUNCYION
1	I1	I	INPUT1
2	O1	O	OUTPUT1
3	I2	I	INPUT2
4	O2	O	OUTPUT2
5	I3	I	INPUT3
6	O3	O	OUTPUT3
7	VSS	—	Power Supply(-)
8	I4	O	OUTPUT4
9	O4	I	INPUT4
10	I5	O	OUTPUT5
11	O5	I	INPUT5
12	I6	O	OUTPUT6
13	O6	I	INPUT6
14	VDD	—	Power Supply(+)

TRUTH TABLE

IN	OUT
H	L
L	H

8) BU4584B Series

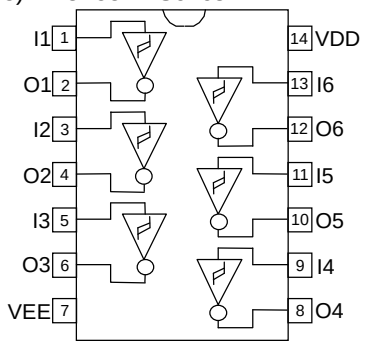

PIN No.	PIN NAME	I/O	PIN FUNCYION
1	I1	I	INPUT1
2	O1	O	OUTPUT1
3	I2	I	INPUT2
4	O2	O	OUTPUT2
5	I3	I	INPUT3
6	O3	O	OUTPUT3
7	VSS	—	Power Supply(-)
8	I4	O	OUTPUT4
9	O4	I	INPUT4
10	I5	O	OUTPUT5
11	O5	I	INPUT5
12	I6	O	OUTPUT6
13	O6	I	INPUT6
14	VDD	—	Power Supply(+)

TRUTH TABLE

IN	OUT
H	L
L	H

●Notes for use

1. Absolute maximum ratings
   An excess in the absolute maximum ratings, such as supply voltage, temperature range of operating conditions, etc., can break down the devices, thus making impossible to identify breaking mode, such as a short circuit or an open circuit. If any over rated values will expect to exceed the absolute maximum ratings, consider adding circuit protection devices, such as fuses.
2. Connecting the power supply connector backward
   Connecting of the power supply in reverse polarity can damage IC. Take precautions when connecting the power supply lines. An external direction diode can be added.
3. Power supply lines
   Design PCB layout pattern to provide low impedance GND and supply lines. To obtain a low noise ground and supply line, separate the ground section and supply lines of the digital and analog blocks. Furthermore, for all power supply terminals to ICs, connect a capacitor between the power supply and the GND terminal. When applying electrolytic capacitors in the circuit, not that capacitance characteristic values are reduced at low temperatures.
4. GND voltage
   The potential of GND pin must be minimum potential in all operating conditions.
5. Thermal design
   Use a thermal design that allows for a sufficient margin in light of the power dissipation (Pd) in actual operating conditions.
6. Inter-pin shorts and mounting errors
   Use caution when positioning the IC for mounting on printed circuit boards. The IC may be damaged if there is any connection error or if pins are shorted together.
7. Actions in strong electromagnetic field
   Use caution when using the IC in the presence of a strong electromagnetic field as doing so may cause the IC to malfunction.
8. Testing on application boards
   When testing the IC on an application board, connecting a capacitor to a pin with low impedance subjects the IC to stress. Always discharge capacitors after each process or step. Always turn the IC's power supply off before connecting it to or removing it from a jig or fixture during the inspection process. Ground the IC during assembly steps as an antistatic measure. Use similar precaution when transporting or storing the IC.
9. Ground Wiring Pattern
   When using both small signal and large current GND patterns, it is recommended to isolate the two ground patterns, placing a single ground point at the ground potential of application so that the pattern wiring resistance and voltage variations caused by large currents do not cause variations in the small signal ground voltage. Be careful not to change the GND wiring pattern of any external components, either.
10. Unused input terminals
    Connect all unused input terminals to VDD or VSS in order to prevent excessive current or oscillation.
    Insertion of a resistor (100kΩ approx.) is also recommended

© 2011 ROHM Co., Ltd. All rights reserved.

●Ordering part number

B	U	4	0	0	1	B	F	V	-	E	2

Part No.

Part No.

4001B	4081B
4011B	4093B
4030B	4069UB
4070B	4584B

Package
None: DIP14
F : SOP14
FV : SSOP-B14

Packaging and forming specification
E2: Embossed tape and reel
None:Tray,Tube

SOP14

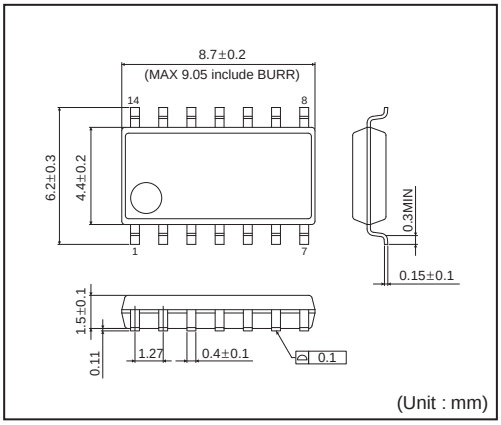

<Tape and Reel information>

Tape	Embossed carrier tape
Quantity	2500pcs
Direction of feed	E2 (The direction is the 1pin of product is at the upper left when you hold reel on the left hand and you pull out the tape on the right hand)

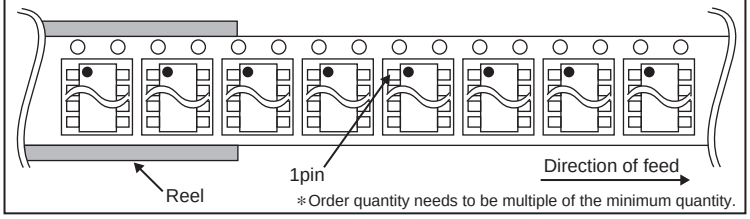

∗Order quantity needs to be multiple of the minimum quantity.

SSOP-B14

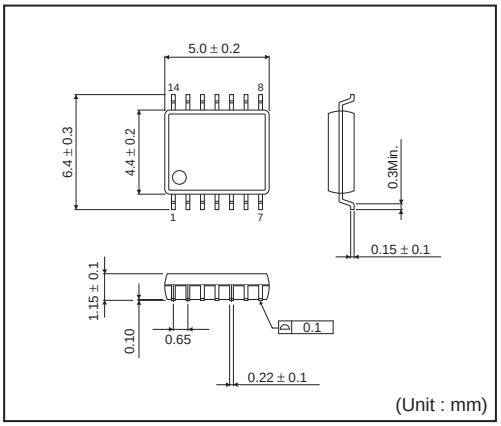

<Tape and Reel information>

Tape	Embossed carrier tape
Quantity	2500pcs
Direction of feed	E2 (The direction is the 1pin of product is at the upper left when you hold reel on the left hand and you pull out the tape on the right hand)

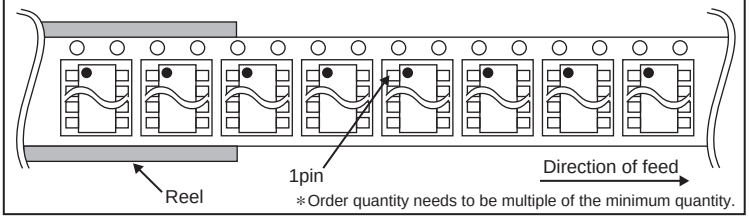

∗Order quantity needs to be multiple of the minimum quantity.

© 2011 ROHM Co., Ltd. All rights reserved.

DIP14

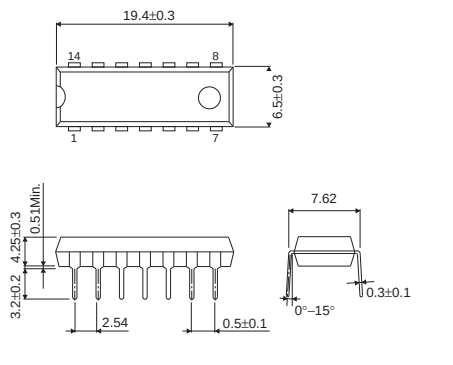

(Unit : mm)

<Tape and Reel information>

Container	Tube
Quantity	1000pcs
Direction of feed	Direction of products is fixed in a container tube

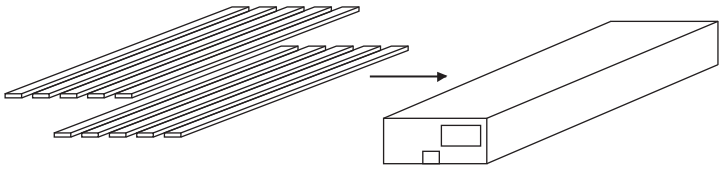

∗Order quantity needs to be multiple of the minimum quantity.

© 2011 ROHM Co., Ltd. All rights reserved.

Notice

Precaution on using ROHM Products

1. Our Products are designed and manufactured for application in ordinary electronic equipments (such as AV equipment, OA equipment, telecommunication equipment, home electronic appliances, amusement equipment, etc.). If you intend to use our Products in devices requiring extremely high reliability (such as medical equipment (Note 1), transport equipment, traffic equipment, aircraft/spacecraft, nuclear power controllers, fuel controllers, car equipment including car accessories, safety devices, etc.) and whose malfunction or failure may cause loss of human life, bodily injury or serious damage to property ("Specific Applications"), please consult with the ROHM sales representative in advance. Unless otherwise agreed in writing by ROHM in advance, ROHM shall not be in any way responsible or liable for any damages, expenses or losses incurred by you or third parties arising from the use of any ROHM's Products for Specific Applications.

(Note1) Medical Equipment Classification of the Specific Applications

JAPAN	USA	EU	CHINA
CLASSⅢ	CLASSⅢ	CLASSⅡb	CLASSⅢ
CLASSⅣ		CLASSⅢ	

2. ROHM designs and manufactures its Products subject to strict quality control system. However, semiconductor products can fail or malfunction at a certain rate. Please be sure to implement, at your own responsibilities, adequate safety measures including but not limited to fail-safe design against the physical injury, damage to any property, which a failure or malfunction of our Products may cause. The following are examples of safety measures:
   [a] Installation of protection circuits or other protective devices to improve system safety
   [b] Installation of redundant circuits to reduce the impact of single or multiple circuit failure

3. Our Products are designed and manufactured for use under standard conditions and not under any special or extraordinary environments or conditions, as exemplified below. Accordingly, ROHM shall not be in any way responsible or liable for any damages, expenses or losses arising from the use of any ROHM's Products under any special or extraordinary environments or conditions. If you intend to use our Products under any special or extraordinary environments or conditions (as exemplified below), your independent verification and confirmation of product performance, reliability, etc, prior to use, must be necessary:
   [a] Use of our Products in any types of liquid, including water, oils, chemicals, and organic solvents
   [b] Use of our Products outdoors or in places where the Products are exposed to direct sunlight or dust
   [c] Use of our Products in places where the Products are exposed to sea wind or corrosive gases, including Cl_2, H_2S, NH_3, SO_2, and NO_2
   [d] Use of our Products in places where the Products are exposed to static electricity or electromagnetic waves
   [e] Use of our Products in proximity to heat-producing components, plastic cords, or other flammable items
   [f] Sealing or coating our Products with resin or other coating materials
   [g] Use of our Products without cleaning residue of flux (even if you use no-clean type fluxes, cleaning residue of flux is recommended); or Washing our Products by using water or water-soluble cleaning agents for cleaning residue after soldering
   [h] Use of the Products in places subject to dew condensation

4. The Products are not subject to radiation-proof design.

5. Please verify and confirm characteristics of the final or mounted products in using the Products.

6. In particular, if a transient load (a large amount of load applied in a short period of time, such as pulse. is applied, confirmation of performance characteristics after on-board mounting is strongly recommended. Avoid applying power exceeding normal rated power; exceeding the power rating under steady-state loading condition may negatively affect product performance and reliability.

7. De-rate Power Dissipation (Pd) depending on Ambient temperature (Ta). When used in sealed area, confirm the actual ambient temperature.

8. Confirm that operation temperature is within the specified range described in the product specification.

9. ROHM shall not be in any way responsible or liable for failure induced under deviant condition from what is defined in this document.

Precaution for Mounting / Circuit board design

1. When a highly active halogenous (chlorine, bromine, etc.) flux is used, the residue of flux may negatively affect product performance and reliability.

2. In principle, the reflow soldering method must be used; if flow soldering method is preferred, please consult with the ROHM representative in advance.

For details, please refer to ROHM Mounting specification

© 2014 ROHM Co., Ltd. All rights reserved.

Precautions Regarding Application Examples and External Circuits

1. If change is made to the constant of an external circuit, please allow a sufficient margin considering variations of the characteristics of the Products and external components, including transient characteristics, as well as static characteristics.

2. You agree that application notes, reference designs, and associated data and information contained in this document are presented only as guidance for Products use. Therefore, in case you use such information, you are solely responsible for it and you must exercise your own independent verification and judgment in the use of such information contained in this document. ROHM shall not be in any way responsible or liable for any damages, expenses or losses incurred by you or third parties arising from the use of such information.

Precaution for Electrostatic

This Product is electrostatic sensitive product, which may be damaged due to electrostatic discharge. Please take proper caution in your manufacturing process and storage so that voltage exceeding the Products maximum rating will not be applied to Products. Please take special care under dry condition (e.g. Grounding of human body / equipment / solder iron, isolation from charged objects, setting of Ionizer, friction prevention and temperature / humidity control).

Precaution for Storage / Transportation

1. Product performance and soldered connections may deteriorate if the Products are stored in the places where:
   [a] the Products are exposed to sea winds or corrosive gases, including Cl2, H2S, NH3, SO2, and NO2
   [b] the temperature or humidity exceeds those recommended by ROHM
   [c] the Products are exposed to direct sunshine or condensation
   [d] the Products are exposed to high Electrostatic

2. Even under ROHM recommended storage condition, solderability of products out of recommended storage time period may be degraded. It is strongly recommended to confirm solderability before using Products of which storage time is exceeding the recommended storage time period.

3. Store / transport cartons in the correct direction, which is indicated on a carton with a symbol. Otherwise bent leads may occur due to excessive stress applied when dropping of a carton.

4. Use Products within the specified time after opening a humidity barrier bag. Baking is required before using Products of which storage time is exceeding the recommended storage time period.

Precaution for Product Label

QR code printed on ROHM Products label is for ROHM's internal use only.

Precaution for Disposition

When disposing Products please dispose them properly using an authorized industry waste company.

Precaution for Foreign Exchange and Foreign Trade act

Since our Products might fall under controlled goods prescribed by the applicable foreign exchange and foreign trade act, please consult with ROHM representative in case of export.

Precaution Regarding Intellectual Property Rights

1. All information and data including but not limited to application example contained in this document is for reference only. ROHM does not warrant that foregoing information or data will not infringe any intellectual property rights or any other rights of any third party regarding such information or data. ROHM shall not be in any way responsible or liable for infringement of any intellectual property rights or other damages arising from use of such information or data.:

2. No license, expressly or implied, is granted hereby under any intellectual property rights or other rights of ROHM or any third parties with respect to the information contained in this document.

Other Precaution

1. This document may not be reprinted or reproduced, in whole or in part, without prior written consent of ROHM.

2. The Products may not be disassembled, converted, modified, reproduced or otherwise changed without prior written consent of ROHM.

3. In no event shall you use in any way whatsoever the Products and the related technical information contained in the Products or this document for any military purposes, including but not limited to, the development of mass-destruction weapons.

4. The proper names of companies or products described in this document are trademarks or registered trademarks of ROHM, its affiliated companies or third parties.

© 2014 ROHM Co., Ltd. All rights reserved.

General Precaution

1. Before you use our Products, you are requested to carefully read this document and fully understand its contents. ROHM shall not be in any way responsible or liable for failure, malfunction or accident arising from the use of any ROHM's Products against warning, caution or note contained in this document.

2. All information contained in this document is current as of the issuing date and subject to change without any prior notice. Before purchasing or using ROHM's Products, please confirm the latest information with a ROHM sales representative.

3. The information contained in this document is provided on an "as is" basis and ROHM does not warrant that all information contained in this document is accurate and/or error-free. ROHM shall not be in any way responsible or liable for any damages, expenses or losses incurred by you or third parties resulting from inaccuracy or errors of or concerning such information.

© 2014 ROHM Co., Ltd. All rights reserved.