# Silicon N-Channel Power MOSFET

# CRTK032N03L2P

## General Description:

CRTK032N03L2P the silicon N-channel Enhanced VDMOSFETs, is obtained by the high density Trench technology which reduce the conduction loss, improve switching performance and enhance the avalanche energy. This device is suitable for use as a load switch and PWM applications. The package form is PDFN3.3*3.3, which accords with the RoHS standard.

| | | |
|---|---|---|
| $V_{DSS}$ | 30 | V |
| $I_D$（Silicon limited current） | 90 | A |
| $I_D$（Package limited current） | 50 | A |
| $P_D$ | 48 | W |
| $R_{DS(ON)Typ}$ | 2.5 | mΩ |

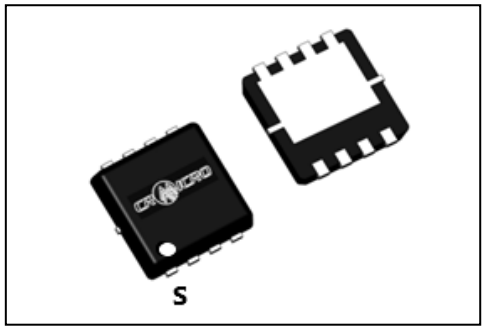


## Features:

- **Fast Switching**
- **Low ON Resistance（Rdson≤3.2mΩ）**
- **Low Gate Charge**
- **Low Reverse transfer capacitances**
- **100% Single Pulse avalanche energy Test**
- **Halogen Free**

Inner Equivalent Principium Chart

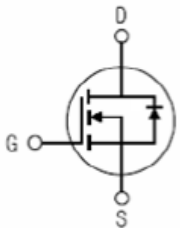


## Applications:

Power switch circuit of adaptor and charger.

E-cigarette,Electric Tool

**Absolute**（$T_j$= 25℃ unless otherwise specified）

| Symbol | Parameter | Rating | Units |
|---|---|---|---|
| $V_{DSS}$ | Drain-to-Source Voltage | 30 | V |
| $I_D$ | Continuous Drain Current $T_C$ = 25 ℃（Silicon limited） | 90 | A |
| | Continuous Drain Current $T_C$ = 25 ℃（Package limited）[a1] | 50 | A |
| | Continuous Drain Current $T_C$ = 100 ℃（Package limited）[a1] | 50 | A |
| $I_{DM}$ [a1] | Pulsed Drain Current $T_C$ = 25 ℃ | 200 | A |
| $V_{GS}$ | Gate-to-Source Voltage | ±20 | V |
| $E_{AS}$ [a2] | Avalanche Energy | 266 | mJ |
| $P_D$ | Power Dissipation $T_C$ = 25 ℃ | 48 | W |
| | Derating Factor above 25 ℃ | 0.384 | W/℃ |
| $T_J$，$T_{stg}$ | Operating Junction and Storage Temperature Range | 150，–55 to 150 | ℃ |

## Electrical Characteristics（$T_j$= 25℃ unless otherwise specified）:

| OFF Characteristics | | | | | | |
|---|---|---|---|---|---|---|
| Symbol | Parameter | Test Conditions | Rating | | | Units |
| | | | Min. | Typ. | Max. | |
| $V_{DSS}$ | Drain to Source Breakdown Voltage | $V_{GS}$=0V, $I_D$=250μA | 30 | -- | -- | V |
| $I_{DSS}$ | Drain to Source Leakage Current | $V_{DS}$ =30V, $V_{GS}$= 0V, Tj = 25℃ | -- | -- | 1 | μA |
| | | $V_{DS}$ =24V, $V_{GS}$= 0V, Tj = 125℃ | -- | -- | 100 | |
| $I_{GSS(F)}$ | Gate to Source Forward Leakage | $V_{GS}$=20V | -- | -- | 100 | nA |
| $I_{GSS(R)}$ | Gate to Source Reverse Leakage | $V_{GS}$ =-20V | -- | -- | -100 | nA |

| ON Characteristics | | | | | | |
|---|---|---|---|---|---|---|
| Symbol | Parameter | Test Conditions | Rating | | | Units |
| | | | Min. | Typ. | Max. | |
| $R_{DS(ON)}$ | Drain-to-Source On-Resistance | $V_{GS}$=10V,$I_D$=19A | -- | 2.5 | 3.2 | mΩ |
| | | $V_{GS}$=4.5V,$I_D$=19A | -- | 4.3 | 6.5 | mΩ |
| $V_{GS(TH)}$ | Gate Threshold Voltage | $V_{DS}$ = $V_{GS}$, $I_D$ = 250μA | 0.9 | 1.3 | 2.0 | V |
| Pulse width tp≤300μs,δ≤2% | | | | | | |

| Dynamic Characteristics | | | | | | |
|---|---|---|---|---|---|---|
| Symbol | Parameter | Test Conditions | Rating | | | Units |
| | | | Min. | Typ. | Max. | |
| $R_g$ | Gate resistance | $V_{GS}$=0V, $V_{DS}$=0V, f=1MHz | -- | 2.8 | -- | Ω |
| $C_{iss}$ | Input Capacitance | $V_{GS}$ = 0V $V_{DS}$ =15V f = 1.0MHz | -- | 3173 | -- | pF |
| $C_{oss}$ | Output Capacitance | | -- | 475 | -- | |
| $C_{rss}$ | Reverse Transfer Capacitance | | -- | 460 | -- | |

| Resistive Switching Characteristics | | | | | | |
|---|---|---|---|---|---|---|
| Symbol | Parameter | Test Conditions | Rating | | | Units |
| | | | Min. | Typ. | Max. | |
| $t_{d(ON)}$ | Turn-on Delay Time | $V_{GS}$=10V，$R_G$=3.0Ω $V_{DD}$=15V，$I_D$=19A | -- | 17.2 | -- | ns |
| tr | Rise Time | | -- | 21 | -- | |
| $t_{d(OFF)}$ | Turn-Off Delay Time | | -- | 117 | -- | |
| $t_f$ | Fall Time | | -- | 71.8 | -- | |
| $Q_g$ | Total Gate Charge | $I_D$ =19A $V_{DD}$ =15V $V_{GS}$ = 10V | -- | 66.4 | -- | nC |
| $Q_{gs}$ | Gate to Source Charge | | -- | 8.2 | -- | |
| $Q_{gd}$ | Gate to Drain (“Miller”)Charge | | -- | 15.5 | -- | |

| Source-Drain Diode Characteristics | | | | | | |
|---|---|---|---|---|---|---|
| Symbol | Parameter | Test Conditions | Rating | | | Units |
| | | | Min. | Typ. | Max. | |
| $I_S$ | Continuous Source Current (Body Diode) | $T_C$ = 25 ℃ | -- | -- | 50 | A |
| $I_{SM}$ | Maximum Pulsed Current (Body Diode) | | -- | -- | 200 | A |
| $V_{SD}$ | Diode Forward Voltage | $I_S$=19A,$V_{GS}$=0V | -- | -- | 1.2 | V |
| trr | Reverse Recovery Time | di/dt=100A/us IF=19A | -- | 55 | -- | ns |
| Qrr | Reverse Recovery Charge | | -- | 48.6 | -- | nC |
| Pulse width tp≤300μs, δ ≤2% | | | | | | |

| Symbol | Parameter | Max. | Units |
|---|---|---|---|
| $R_{\theta JC}$ | Junction-to-Case | 2.6 | ℃/W |
| $R_{\theta JA}$ | Junction-to-Ambient | 55 | ℃/W |

[a1]: Repetitive rating; pulse width limited by maximum junction temperature
[a2]: L=0.5mH, $I_D$=32.6A, Start $T_J$=25℃
[a3]: Recommend soldering temperature defined by IPC/JEDEC J-STD 020

# Characteristics Curve:

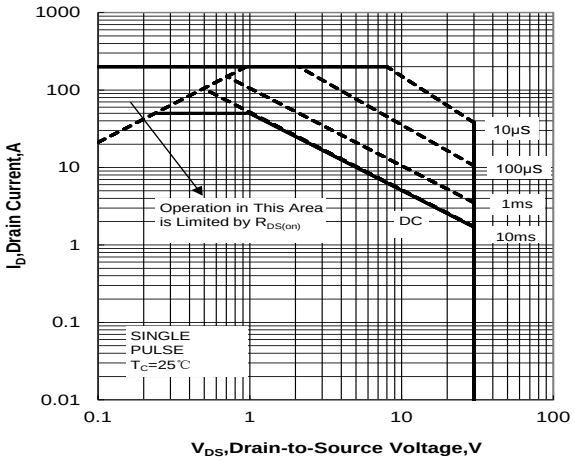


Figure 1 . Maximum Safe Operating

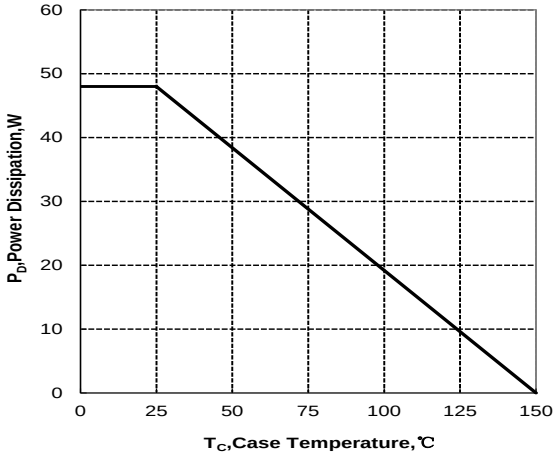


Figure 2. Maximum Power Dissipation vs Case Temperature

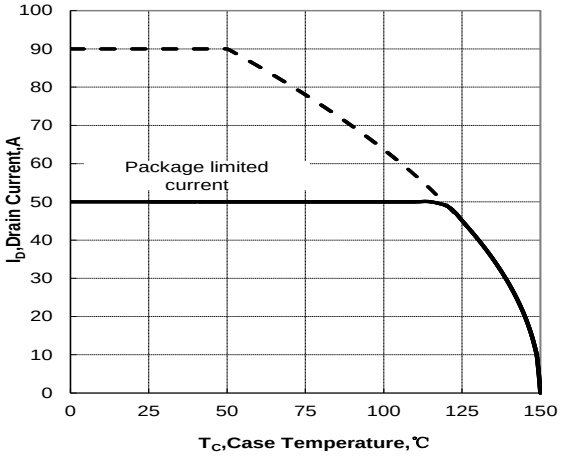


Figure 3. Maximum Continuous Drain Current vs Case Temperature

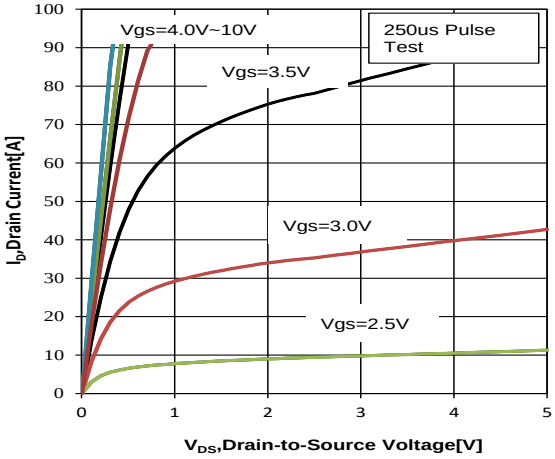


Figure 4. Typical output Characteristics

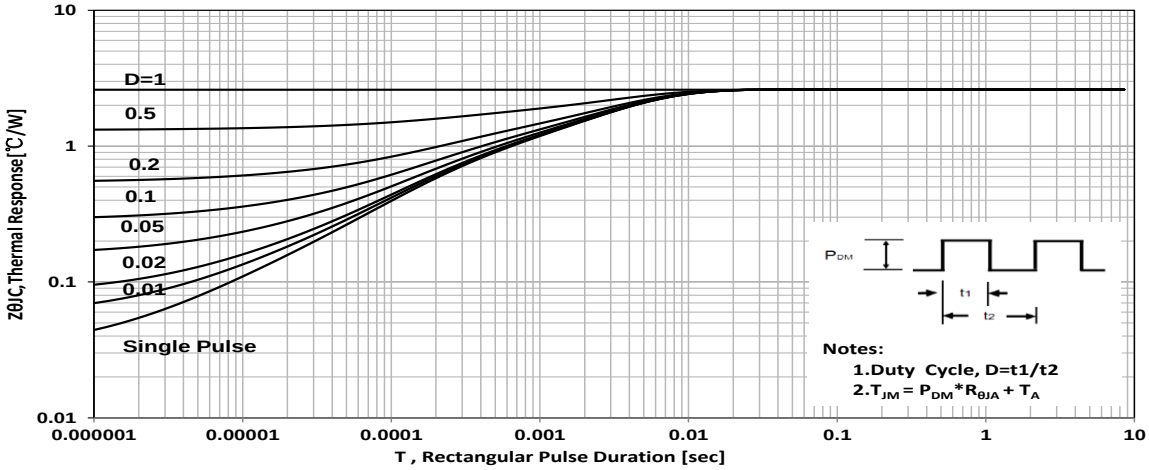


Figure 5 Maximum Effective Thermal Impedance , Junction to Case

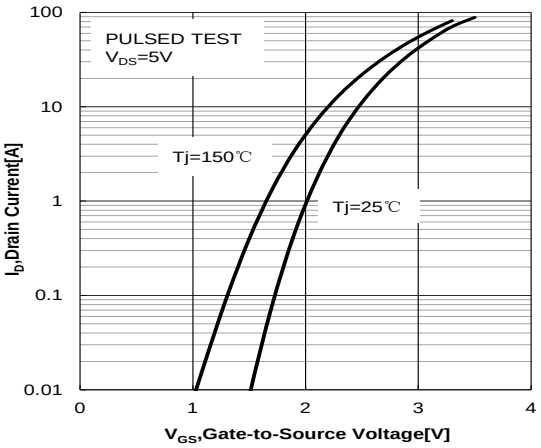


**Figure 6 Typical Transfer**

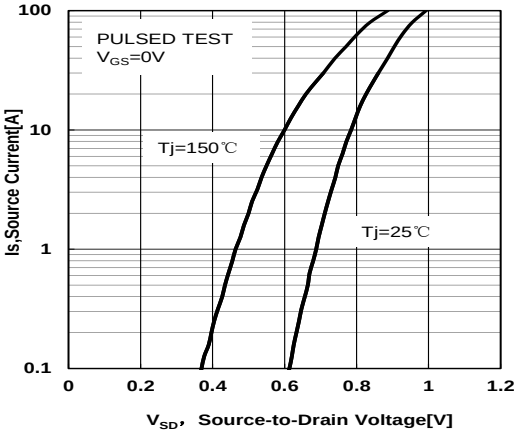


**Figure 7 Typical Body Diode Transfer**

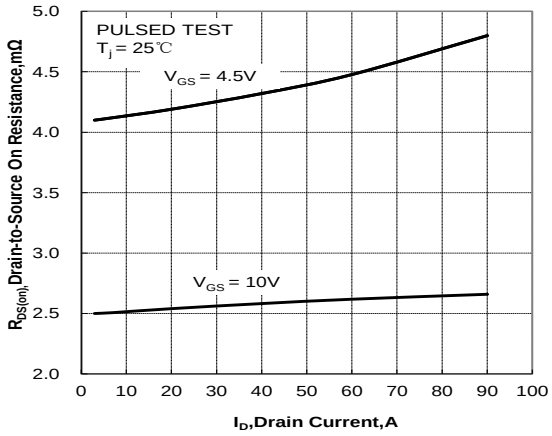


**Figure 8. Drain-to-Source On Resistance vs Drain Current**

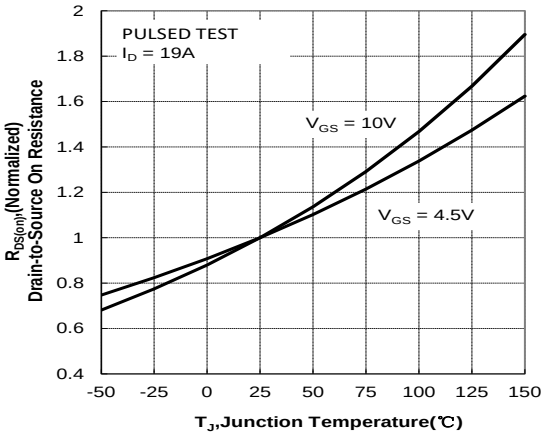


**Figure 9. Normalized On Resistance vs Junction Temperature**

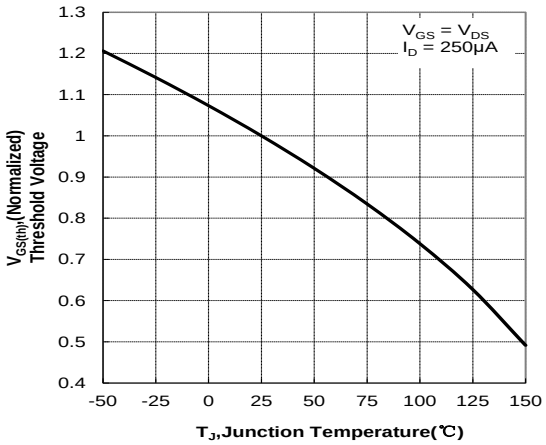


**Figure10. Normalized Threshold Voltage vs Junction Temperature**

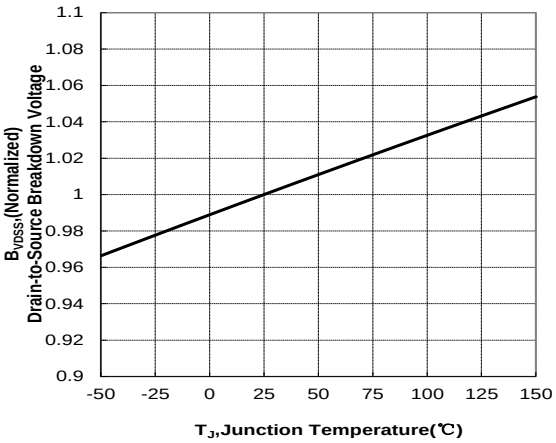


**Figure 11. Normalized Breakdown Voltage vs Junction Temperature**

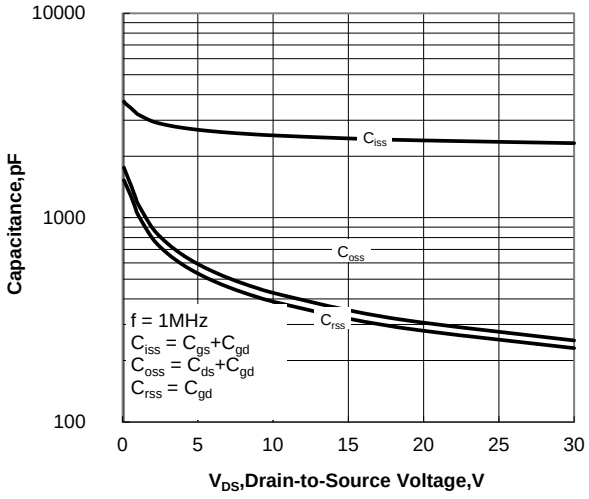


Figure 12. Capacitance Characteristics

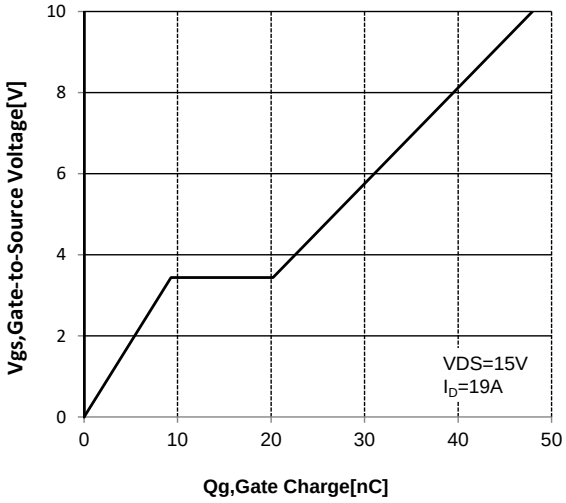


Figure 13 Typical Gate Charge vs Gate to Source Voltage

## Test Circuit and Waveform

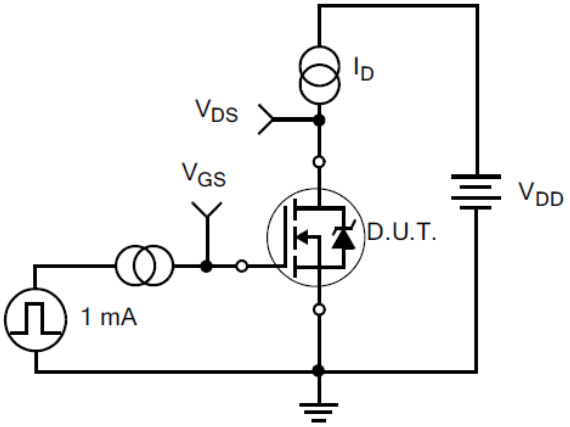


Figure 14. Gate Charge Test Circuit

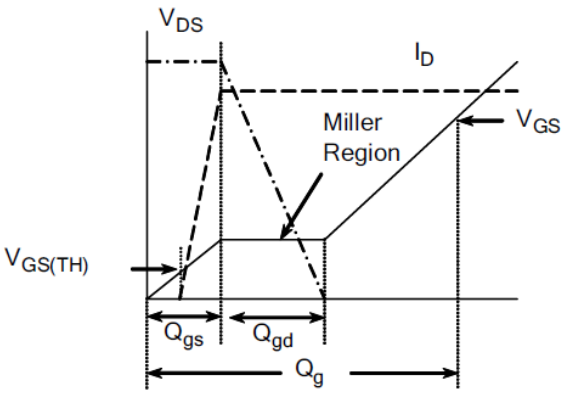


Figure 15. Gate Charge Waveforms

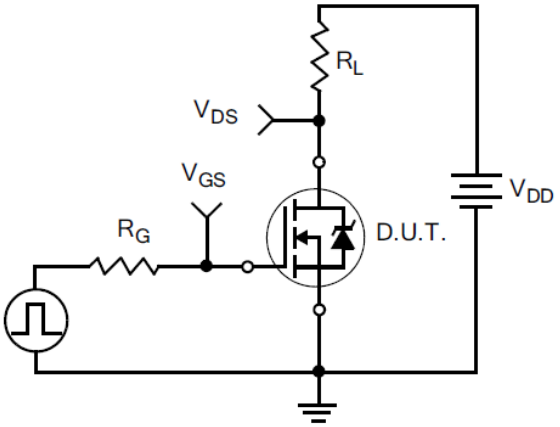


Figure 16. Resistive Switching Test Circuit

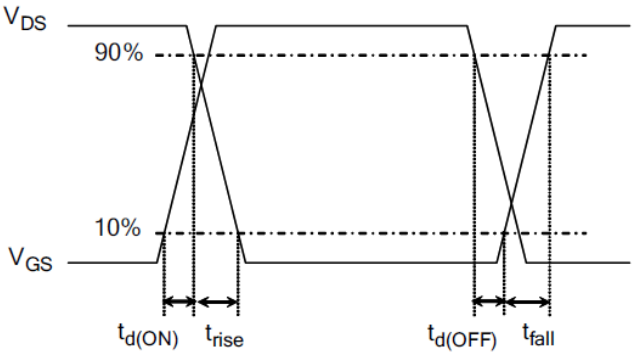


Figure 17. Resistive Switching Waveforms

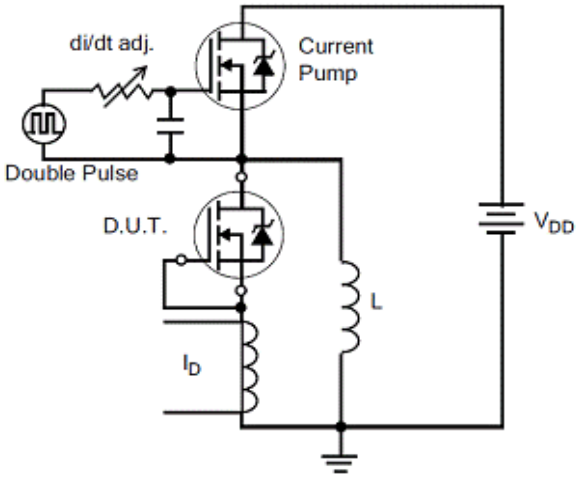


Figure 18. Diode Reverse Recovery Test Circuit

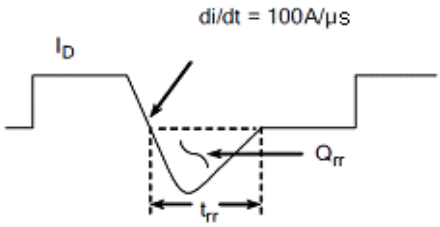


Figure 19. Diode Reverse Recovery Waveform

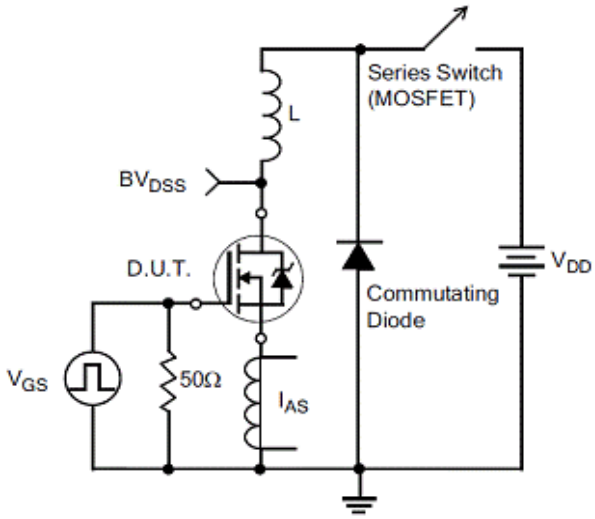


Figure20.Unclamped Inductive Switching Test Circuit

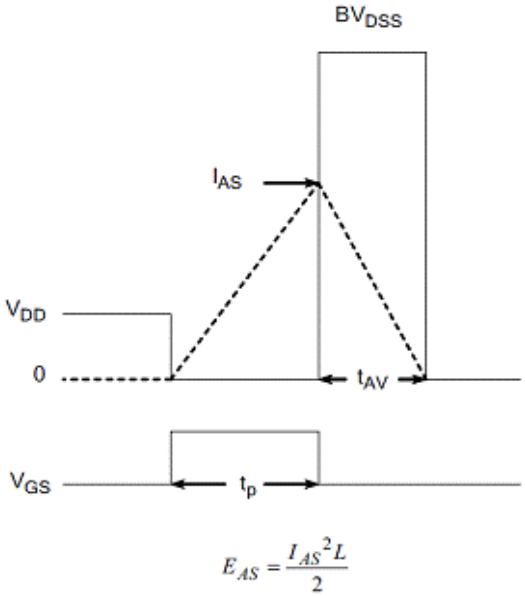


Figure21.Unclamped Inductive Switching Waveform

## Package Information：

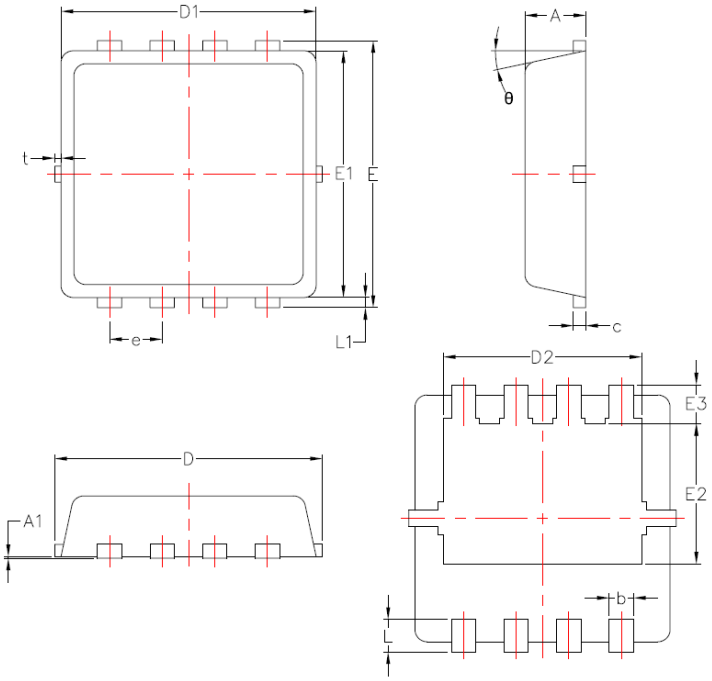


| Items | Values(mm) | |
|---|---|---|
| | MIN | MAX |
| A | 0.7 | 0.9 |
| A1 | / | 0.05 |
| b | 0.2 | 0.4 |
| c | 0.1 | 0.25 |
| D | 3.05 | 3.55 |
| D1 | 2.90 | 3.35 |
| D2 | 2.15 | 2.65 |
| E | 3.05 | 3.55 |
| E1 | 2.80 | 3.30 |
| E2 | 1.54 | 1.94 |
| E3 | 0.18 | 0.65 |
| e | 0.55 | 0.75 |
| L | 0.2 | 0.6 |
| L1 | 0.05 | 0.25 |
| t | / | 0.15 |
| θ | 8° | 14° |

PDFN3.3×3.3Package

**The name and content of poisonous and harmful material in products**

| | Hazardous Substance | | | | | | | | | |
|---|---|---|---|---|---|---|---|---|---|---|
| | Pb | Hg | Cd | Cr(VI) | PBB | PBDE | DIBP | DEHP | DBP | BBP |
| Limit | ≤0.1% | ≤0.1% | ≤ 0.01% | ≤0.1% | ≤0.1% | ≤0.1% | ≤0.1% | ≤0.1% | ≤0.1% | ≤0.1% |
| Lead Frame | ○ | ○ | ○ | ○ | ○ | ○ | ○ | ○ | ○ | ○ |
| Molding | ○ | ○ | ○ | ○ | ○ | ○ | ○ | ○ | ○ | ○ |
| Chip | ○ | ○ | ○ | ○ | ○ | ○ | ○ | ○ | ○ | ○ |
| Wire Bonding | ○ | ○ | ○ | ○ | ○ | ○ | ○ | ○ | ○ | ○ |
| Solder | × | ○ | ○ | ○ | ○ | ○ | ○ | ○ | ○ | ○ |
| Note | ○: Means the hazardous material is under the criterion of 2011/65/EU.<br>×: Means the hazardous material exceeds the criterion of 2011/65/EU.<br>The plumbum element of solder exist in products presently, but within the allowed range of Eurogroup's RoHS. | | | | | | | | | |

## Warnings

1. Exceeding the maximum ratings of the device in performance may cause damage to the device, even the permanent failure, which may affect the dependability of the machine. It is suggested to be used under 80 percent of the maximum ratings of the device.
2. When installing the heatsink, please pay attention to the torsional moment and the smoothness of the heatsink.
3. VDMOSFETs is the device which is sensitive to the static electricity, it is necessary to protect the device from being damaged by the static electricity when using it.
4. This publication is made by Huajing Microelectronics and subject to regular change without notice.

**WUXI CHINA RESOURCES HUAJING MICROELECTRONICS CO., LTD.**

**Add: No.14 Liangxi RD. Wuxi, Jiangsu, China Mail:214061 https://www.crmicro.com**
**Tel: +86 0510-85807228 Fax: +86- 0510-85800864**

**Marketing Part: Post: 214061 Tel: +86 0510-81805277/81805336**
**Fax: +86 0510-85800360/85803016**

**Application and Service: Post: 214061 Tel / Fax: +86- 0510-81805243/81805110**