Silicon N-Channel Power MOSFET

CRTM045N04L2P

General Description:

CRTM045N04L2P the silicon N-channel Enhanced VDMOSFETs, is obtained by the high density Trench technology which reduce the conduction loss, improve switching performance and enhance the avalanche energy. This device is suitable for use as a load switch and PWM applications. The package form is PDFN5*6, which accords with the RoHS standard.

V_{DSS}	40	V
I_D（Silicon limited current）	80	A
I_D（Package limited current）	60	A
P_D	59.5	W
$R_{DS(ON)Typ}$	3.5	mΩ

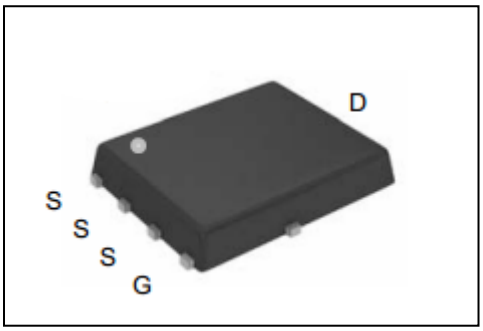

Inner Equivalent Principium Chart

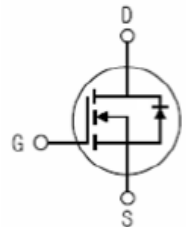

Features:

- **Fast Switching**
- **Low ON Resistance（Rdson≤4.5mΩ）**
- **Low Gate Charge**
- **Low Reverse transfer capacitances**
- **100% Single Pulse avalanche energy Test**
- **Halogen Free**

Applications:

Power switch circuit of adaptor and charger.

E-cigarette,Electric Tool

Absolute（T_j= 25℃ unless otherwise specified）

Symbol	Parameter	Rating	Units
V_{DSS}	Drain-to-Source Voltage	40	V
I_D	Continuous Drain Current T_C = 25 ℃（Silicon limited）	80	A
	Continuous Drain Current T_C = 25 ℃（Package limited）[a1]	60	A
	Continuous Drain Current T_C = 100 ℃（Package limited）[a1]	56.5	A
I_{DM} [a1]	Pulsed Drain Current T_C = 25 ℃	240	A
V_{GS}	Gate-to-Source Voltage	±20	V
E_{AS} [a2]	Avalanche Energy	192	mJ
P_D	Power Dissipation T_C = 25 ℃	59.5	W
	Derating Factor above 25 ℃	0.476	W/℃
T_J，T_{stg}	Operating Junction and Storage Temperature Range	150，–55 to 150	℃

Electrical Characteristics（T_j= 25℃ unless otherwise specified）:

OFF Characteristics						
Symbol	Parameter	Test Conditions	Rating			Units
			Min.	Typ.	Max.	
V_{DSS}	Drain to Source Breakdown Voltage	V_{GS}=0V, I_D=250μA	40	--	--	V
I_{DSS}	Drain to Source Leakage Current	V_{DS} =40V, V_{GS}= 0V, Tj = 25℃	--	--	1	μA
		V_{DS} =32V, V_{GS}= 0V, Tj = 125℃	--	--	100	
$I_{GSS(F)}$	Gate to Source Forward Leakage	V_{GS}=20V	--	--	100	nA
$I_{GSS(R)}$	Gate to Source Reverse Leakage	V_{GS} =-20V	--	--	-100	nA

ON Characteristics						
Symbol	Parameter	Test Conditions	Rating			Units
			Min.	Typ.	Max.	
$R_{DS(ON)}$	Drain-to-Source On-Resistance	V_{GS}=10V,I_D=19A	--	3.5	4.5	mΩ
		V_{GS}=4.5V,I_D=19A	--	4.4	6.5	mΩ
$V_{GS(TH)}$	Gate Threshold Voltage	V_{DS} = V_{GS}, I_D = 250μA	1.0	1.4	2.0	V
Pulse width tp≤300μs,δ≤2%						

Dynamic Characteristics						
Symbol	Parameter	Test Conditions	Rating			Units
			Min.	Typ.	Max.	
R_g	Gate resistance	V_{GS}=0V, V_{DS}=0V, f=1MHz	--	3.06	--	Ω
C_{iss}	Input Capacitance	V_{GS} = 0V, V_{DS} =20V f = 1.0MHz	--	3006	--	pF
C_{oss}	Output Capacitance		--	328.8	--	
C_{rss}	Reverse Transfer Capacitance		--	295.6	--	

Resistive Switching Characteristics						
Symbol	Parameter	Test Conditions	Rating			Units
			Min.	Typ.	Max.	
$t_{d(ON)}$	Turn-on Delay Time	V_{GS}=10V，R_G=3.0Ω V_{DD}=20V，I_D=19A	--	13	--	ns
tr	Rise Time		--	12.4	--	
$t_{d(OFF)}$	Turn-Off Delay Time		--	73.8	--	
t_f	Fall Time		--	9.2	--	
Q_g	Total Gate Charge	I_D =19A V_{DD} =20V V_{GS} = 10V	--	57.4	--	nC
Q_{gs}	Gate to Source Charge		--	7.07	--	
Q_{gd}	Gate to Drain (“Miller”)Charge		--	12.67	--	

Source-Drain Diode Characteristics						
Symbol	Parameter	Test Conditions	Rating			Units
			Min.	Typ.	Max.	
I_S	Continuous Source Current (Body Diode)	T_C = 25 ℃	--	--	60	A
I_{SM}	Maximum Pulsed Current (Body Diode)		--	--	240	A
V_{SD}	Diode Forward Voltage	I_S=19A,V_{GS}=0V	--	--	1.2	V
trr	Reverse Recovery Time	di/dt=100A/us IF=19A	--	36	--	ns
Qrr	Reverse Recovery Charge		--	30.8	--	nC
Pulse width tp≤300μs, δ ≤2%						

Symbol	Parameter	Max.	Units
$R_{\theta JC}$	Junction-to-Case	2.1	℃/W
$R_{\theta JA}$	Junction-to-Ambient	60	℃/W

[a1]: Repetitive rating; pulse width limited by maximum junction temperature
[a2]: L=0.5mH, I_D=27.7A, Start T_J=25℃
[a3]: Recommend soldering temperature defined by IPC/JEDEC J-STD 020

Characteristics Curve:

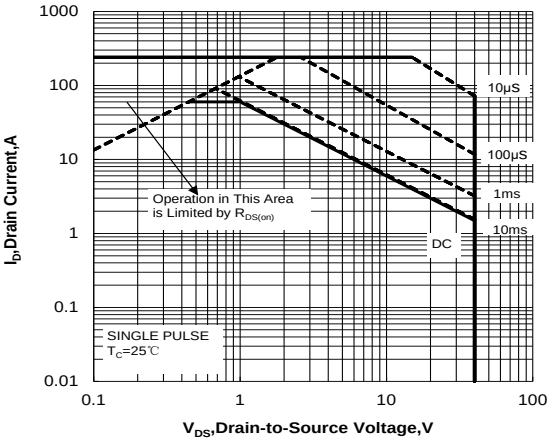

Figure 1 . Maximum Safe Operating Area

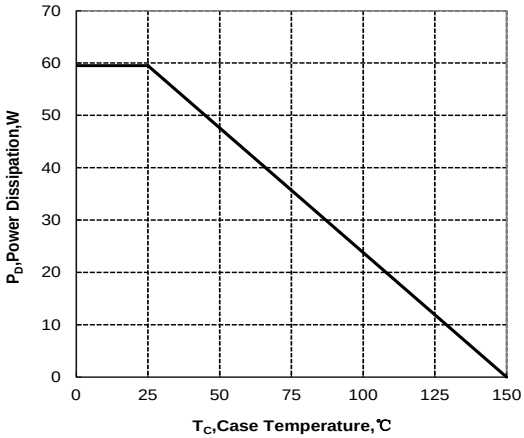

Figure 2. Maximum Power Dissipation vs Case Temperature

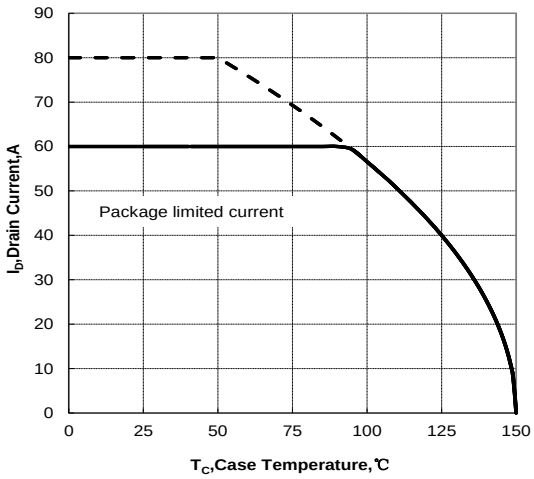

Figure 3. Maximum Continuous Drain Current vs Case Temperature

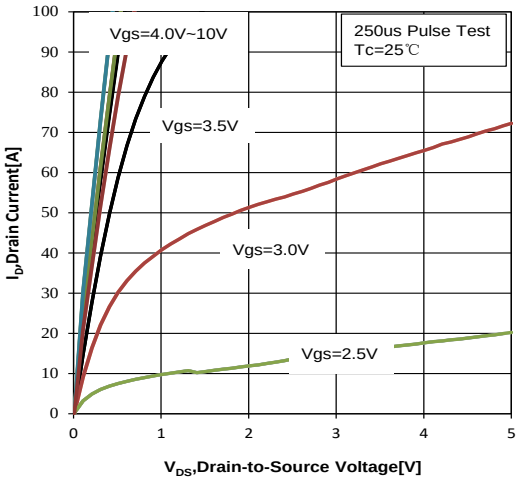

Figure 4. Typical output Characteristics

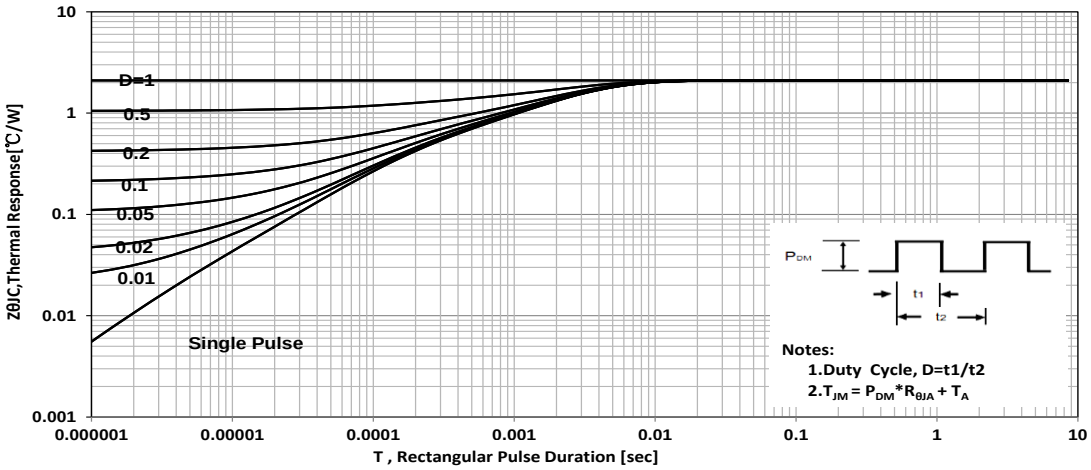

Figure 5 Maximum Effective Thermal Impedance , Junction to Case

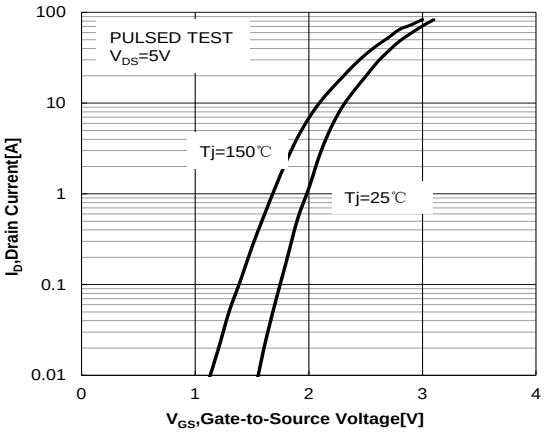

Figure 6 Typical Transfer Characteristics

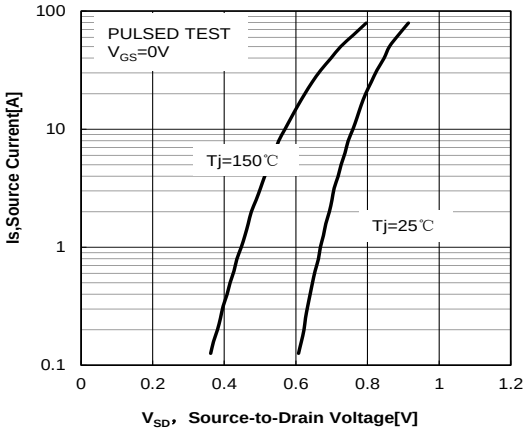

Figure 7 Typical Body Diode Transfer Characteristics

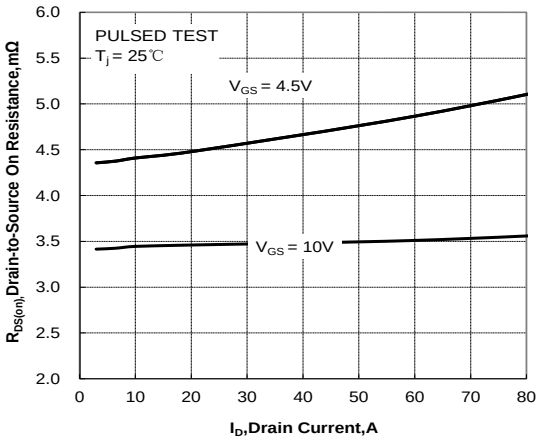

Figure 8. Drain-to-Source On Resistance vs Drain Current

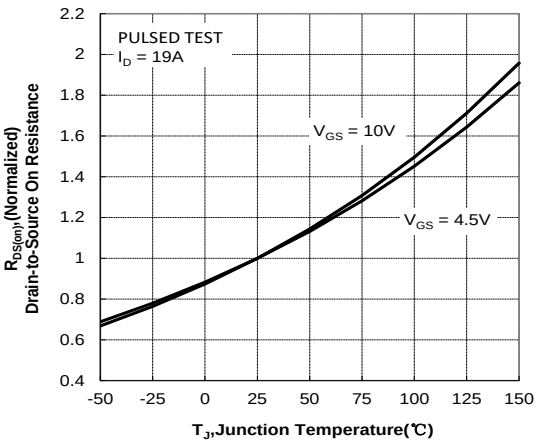

Figure 9. Normalized On Resistance vs Junction Temperature

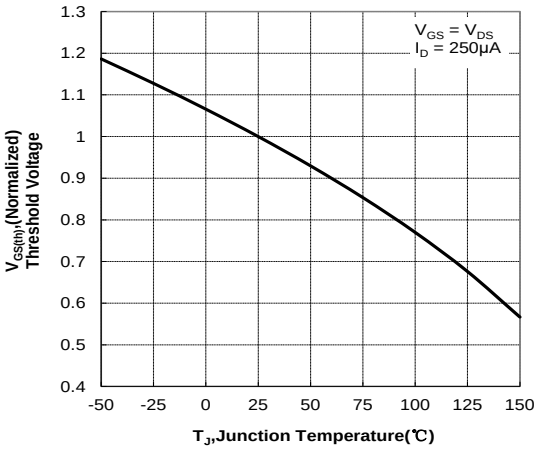

Figure10. Normalized Threshold Voltage vs Junction Temperature

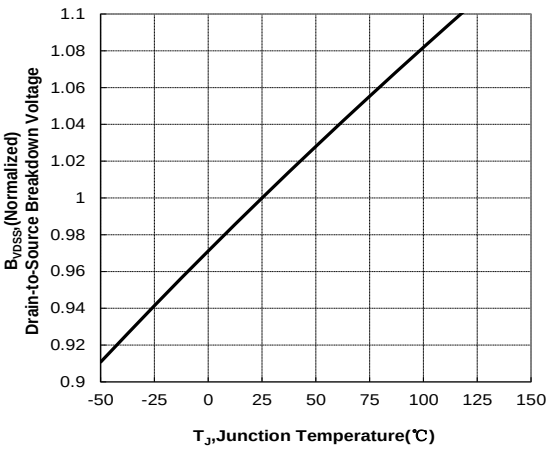

Figure 11. Normalized Breakdown Voltage vs Junction Temperature

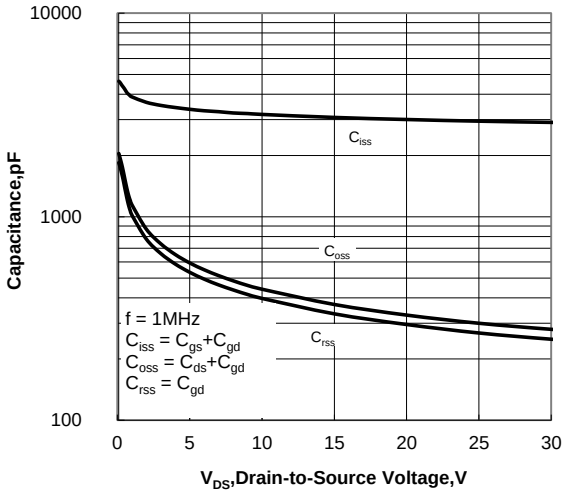

Figure 12. Capacitance Characteristics

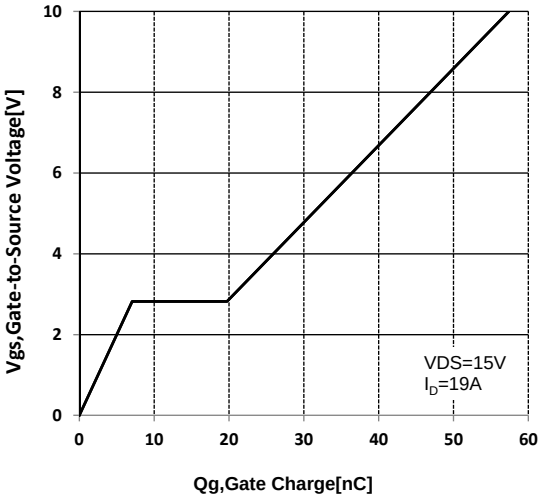

Figure 13 Typical Gate Charge vs Gate to Source Voltage

Test Circuit and Waveform

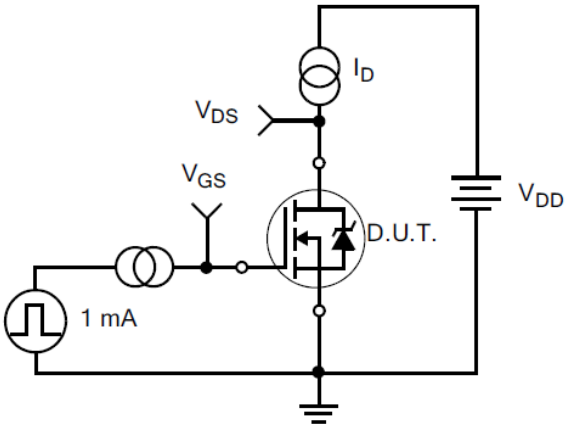

Figure 14. Gate Charge Test Circuit

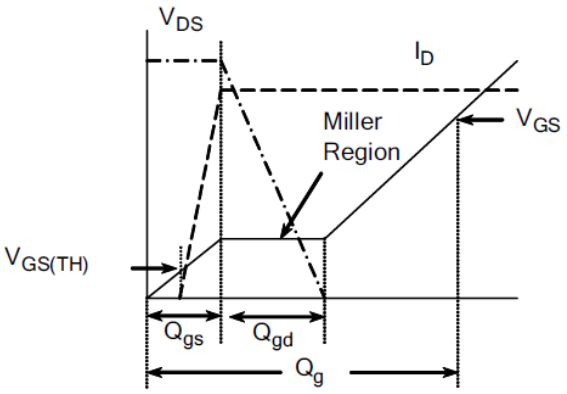

Figure 15. Gate Charge Waveforms

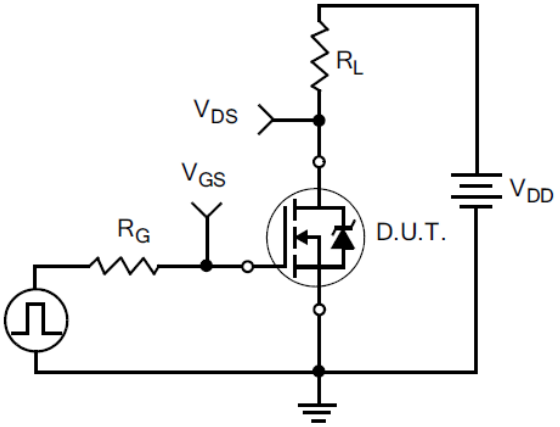

Figure 16. Resistive Switching Test Circuit

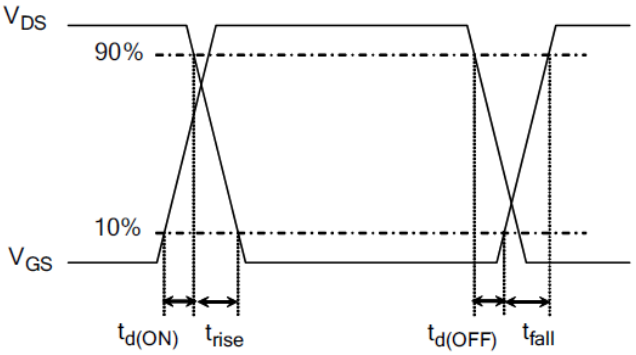

Figure 17. Resistive Switching Waveforms

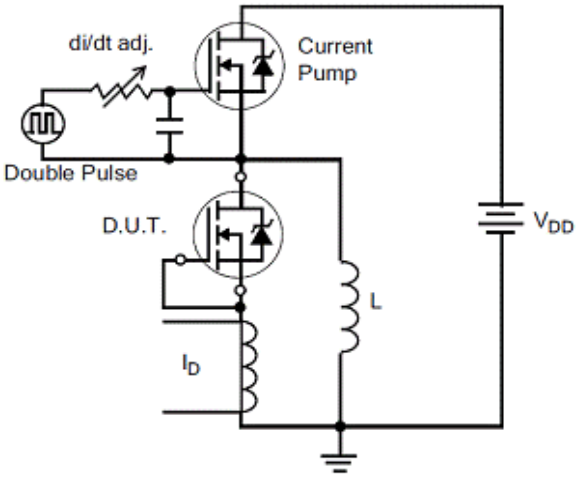

Figure 18. Diode Reverse Recovery Test Circuit

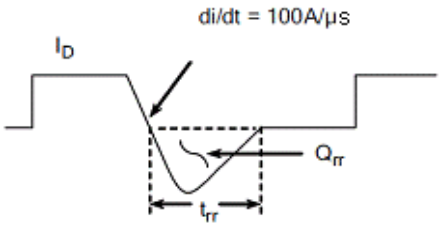

Figure 19. Diode Reverse Recovery Waveform

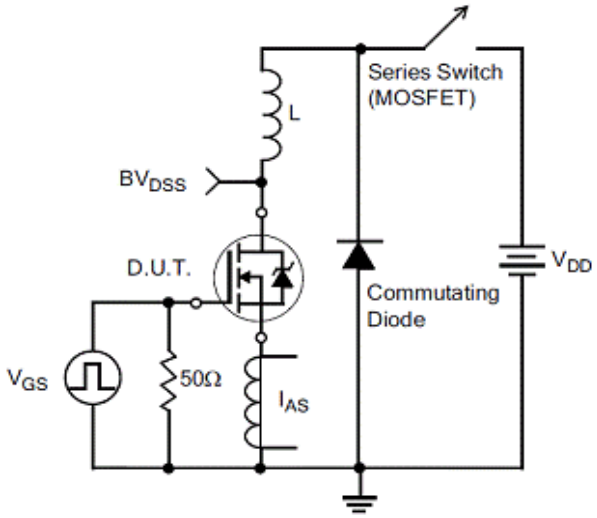

Figure20.Unclamped Inductive Switching Test Circuit

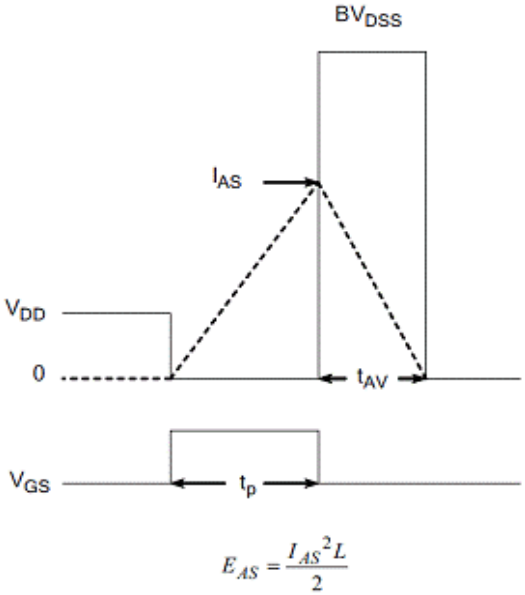

Figure21.Unclamped Inductive Switching Waveform

Package Information:

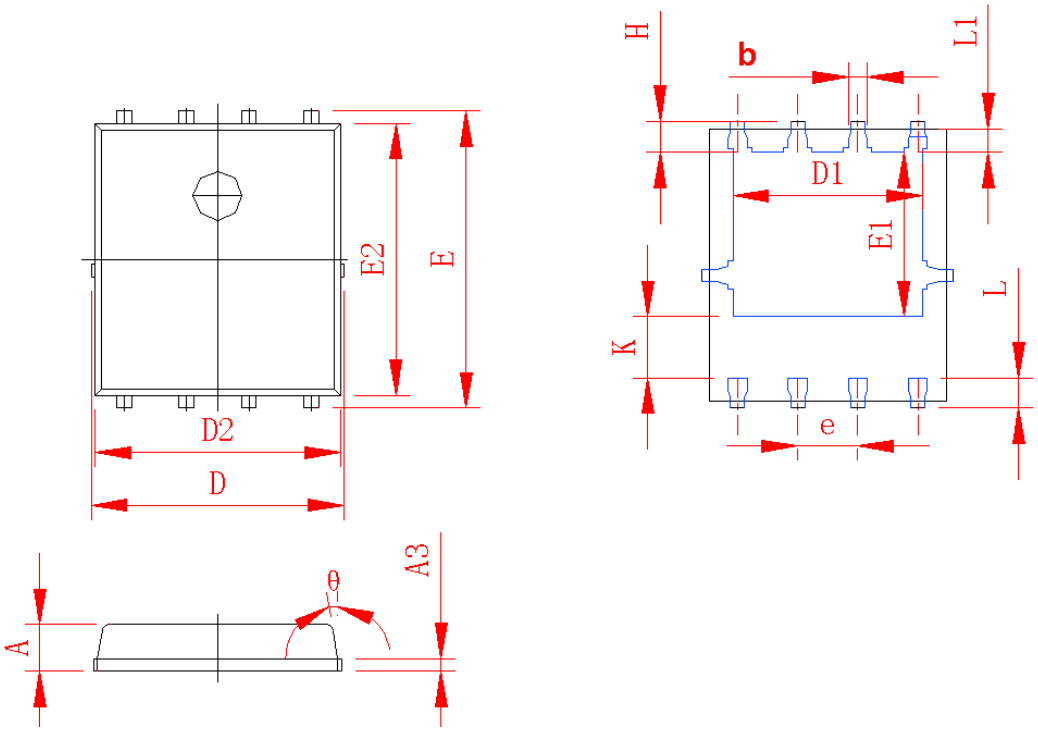

Symbol	Values(mm)	
	MIN	MAX
A	0.80	1.20
A3	0.15	0.35
D	5.00	5.35
E	5.85	6.25
D1	3.81	4.21
E1	3.33	3.63
D2	4.85	5.30
E2	5.60	6.05
k	1.1	1.5
b	0.2	0.6
e	1.07	1.47
L	0.42	0.82
L1	0.35	0.65
H	0.45	0.85
θ	8°	12°

PDFN5×6 Package

The name and content of poisonous and harmful material in products

	Hazardous Substance									
	Pb	Hg	Cd	Cr(VI)	PBB	PBDE	DIBP	DEHP	DBP	BBP
Limit	≤0.1%	≤0.1%	≤ 0.01%	≤0.1%	≤0.1%	≤0.1%	≤0.1%	≤0.1%	≤0.1%	≤0.1%
Lead Frame	○	○	○	○	○	○	○	○	○	○
Molding	○	○	○	○	○	○	○	○	○	○
Chip	○	○	○	○	○	○	○	○	○	○
Wire Bonding	○	○	○	○	○	○	○	○	○	○
Solder	×	○	○	○	○	○	○	○	○	○
Note	○: Means the hazardous material is under the criterion of 2011/65/EU. ×: Means the hazardous material exceeds the criterion of 2011/65/EU. The plumbum element of solder exist in products presently, but within the allowed range of Eurogroup's RoHS.									

Warnings

1. Exceeding the maximum ratings of the device in performance may cause damage to the device, even the permanent failure, which may affect the dependability of the machine. It is suggested to be used under 80 percent of the maximum ratings of the device.
2. When installing the heatsink, please pay attention to the torsional moment and the smoothness of the heatsink.
3. VDMOSFETs is the device which is sensitive to the static electricity, it is necessary to protect the device from being damaged by the static electricity when using it.
4. This publication is made by Huajing Microelectronics and subject to regular change without notice.

WUXI CHINA RESOURCES HUAJING MICROELECTRONICS CO., LTD.

Add: No.14 Liangxi RD. Wuxi, Jiangsu, China Mail:214061 http://www. crhj.com.cn
Tel: +86 0510-85807228 Fax: +86- 0510-85800864

Marketing Part: Post: 214061 Tel: +86 0510-81805277/81805336
Fax: +86 0510-85800360/85803016

Application and Service: Post: 214061 Tel / Fax: +86- 0510-81805243/81805110