www.DataSheet4U.com

****

C-MOS BUS EXCHANGER
-TOP VIEW-

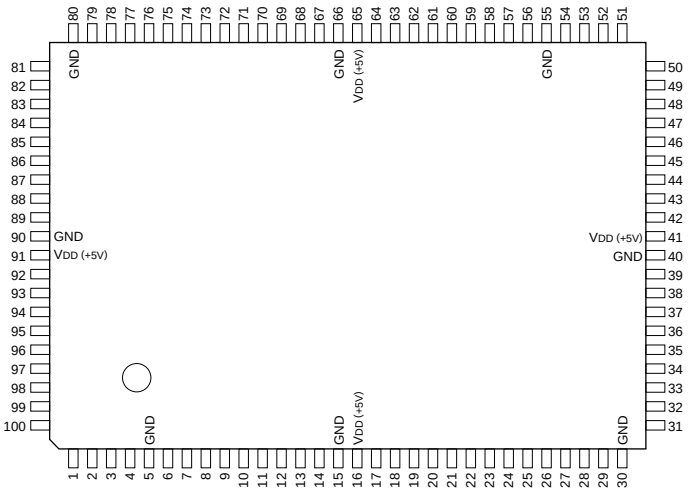

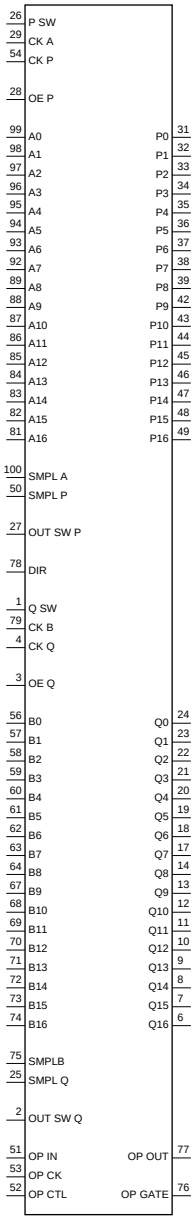

(VDD = +5V)

PIN No.	I/O	SIGNAL	PIN No.	I/O	SIGNAL	PIN No.	I/O	SIGNAL	PIN No.	I/O	SIGNAL
1	I	O SW	26	I	P SW	51	I	OP IN	76	O	OP GATE
2	I	OUT SW O	27	I	OUT SW P	52	I	OP CTL	77	O	OP OUT
3	I	OE Q	28	I	OE P	53	I	OP CK	78	I	DIR
4	I	CK Q	29	I	CK A	54	I	CK P	79	I	CK B
5	—	GND	30	—	GND	55	—	GND	80	—	GND
6	O	Q16	31	O	P0	56	I	B0	81	I	A16
7	O	Q15	32	O	P1	57	I	B1	82	I	A15
8	O	Q14	33	O	P2	58	I	B2	83	I	A14
9	O	Q13	34	O	P3	59	I	B3	84	I	A13
10	O	Q12	35	O	P4	60	I	B4	85	I	A12
11	O	Q11	36	O	P5	61	I	B5	86	I	A11
12	O	Q10	37	O	P6	62	I	B6	87	I	A10
13	O	Q9	38	O	P7	63	I	B7	88	I	A9
14	O	Q8	39	O	P8	64	I	B8	89	I	A8
15	—	GND	40	—	GND	65	—	VDD	90	—	GND
16	—	VDD	41	—	VDD	66	—	GND	91	—	VDD
17	O	Q7	42	O	P9	67	I	B9	92	I	A7
18	O	Q6	43	O	P10	68	I	B10	93	I	A6
19	O	Q5	44	O	P11	69	I	B11	94	I	A5
20	O	Q4	45	O	P12	70	I	B12	95	I	A4
21	O	Q3	46	O	P13	71	I	B13	96	I	A3
22	O	Q2	47	O	P14	72	I	B14	97	I	A2
23	O	Q1	48	O	P15	73	I	B15	98	I	A1
24	O	Q0	49	O	P16	74	I	B16	99	I	A0
25	I	SMPL Q	50	I	SMPL P	75	I	SMPL B	100	I	SMPL A

www.DataSheet4U.com

www.DataSheet4U.com

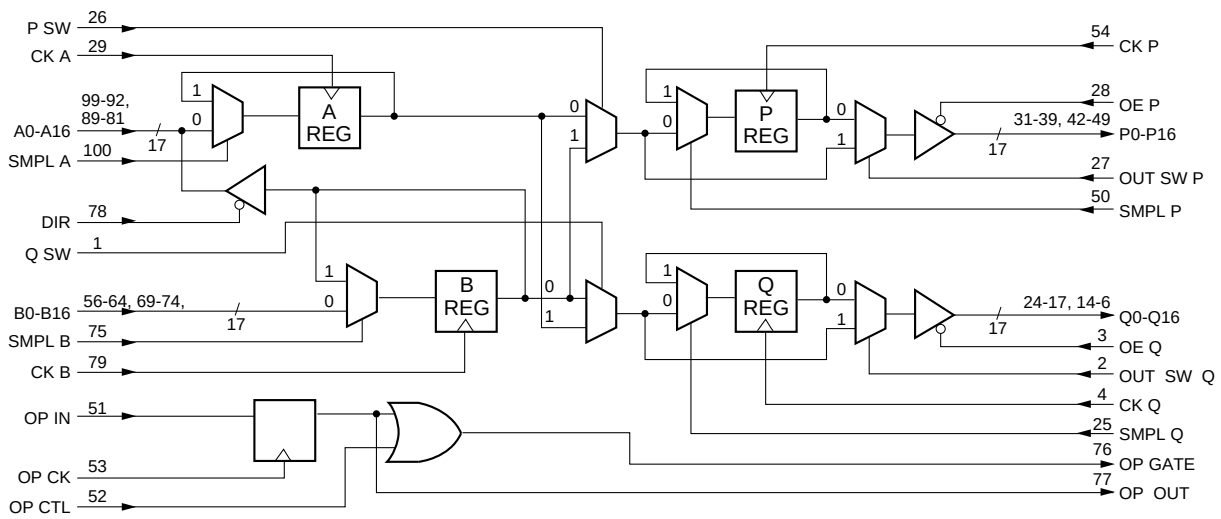

www.DataSheet4U.com