DG12128-02 128 X 128 Dots

■ Mechanical Data

Item	Standard Value	Unit
Module Size	88.4(W) x 88.4(H) x 10.8(T)	mm
Viewing Area	69.0(W) x 69.0(H)	mm
Dot Pixels	128 x 128	dots
Dot Size	0.46 x 0.46	mm
Dot Pitch	0.50 x 0.50	mm

■ Absolute Maximum Ratings

Item	Symbol	Standard Value			Unit
		Min.	Typ.	Max.	
Supply Voltage for Logic	V_{DD}-V_{SS}	0	--	7.0	V
Supply Voltage for LCD Drive	V_{DD}-V_{EE}	0	--	26.0	V
Input Voltage	V_I	V_{SS}	--	V_{DD}	V
Operation Temperature	Topr	0	--	50	°C
Storage Temperature	Tstg	-20	--	70	°C

■ Electrical Characteristics

Item	Symbol	Condition	Standard Value			Unit
			Min.	Typ.	Max.	
LCD Supply Voltage	V_{DD}-V_{SS}	--	4.75	5.0	5.25	V
LCD Driver Circuit Power Supply Voltage	V_{DD}-V_{EE}	25°C	17.7	18.4	19.1	V
Input Voltage	V_{IH}	V_{DD} = 5+0.25V	0.7xV_{DD}	--	V_{DD}	V
Input Voltage	V_{IL}	V_{DD} = 5+0.25V	0	--	0.3xV_{DD}	V
Output Voltage	V_{OH}					V
Output Voltage	V_{OL}					V
Input Leakage Current	I_U					V
Supply Current	I_{DD}	V_{DD} = 5.0V	--	13	30.0	mA
EL Backlight	I_{EL}					

■ Pin Assignment

No.	Symbol	Level	Function
1	V_{SS}	--	Power Supply(0V,GND)
2	N.C	--	
3	AUDIO I/P	H/L	Audio Signal Input
4	RS	H/L	H: Instruction L: Data
5	R/W	H/L	H: Data Read L: Data Write
6	E	H/L	Enable
7	N.C	--	
8~15	DB0~DB7	H/L	Data Bus Line
16~17	N.C	--	No Connection
18	V_{DD}	--	Power Supply for Logic Circuit
19	AUDIO	--	Audio Ground

■ Block Diagram

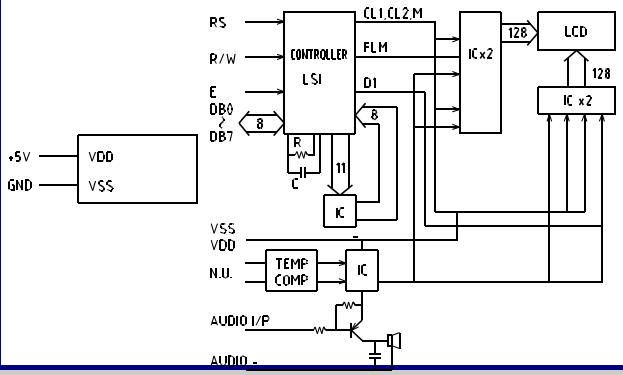

■ External Dimensions

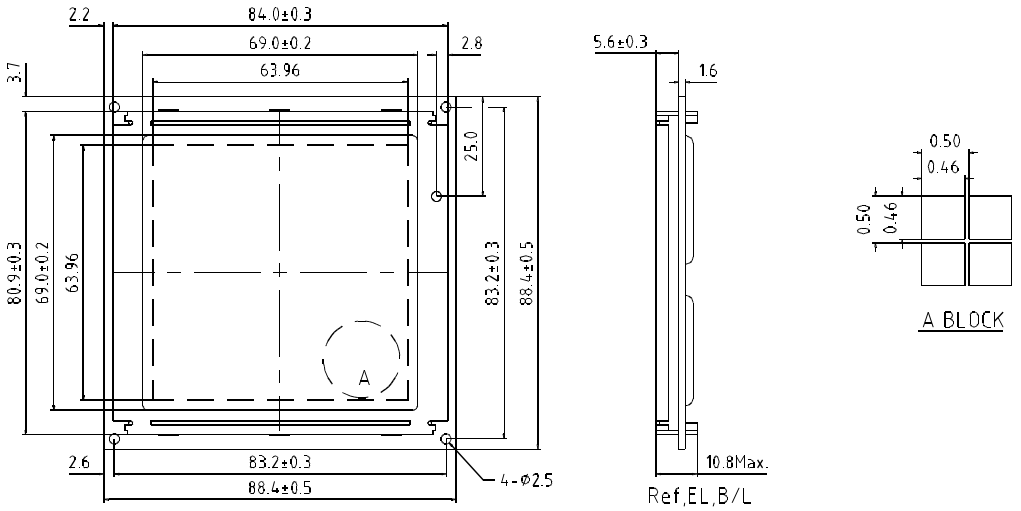

Rte de Vevey 105 , CH-1618 Châtel St.-Denis, Tel: +41 21 948 20 80, Fax: +41 21 948 20 88

E-Mail: optologic-office@optologic.ch - Web-Site: www.optologic.ch