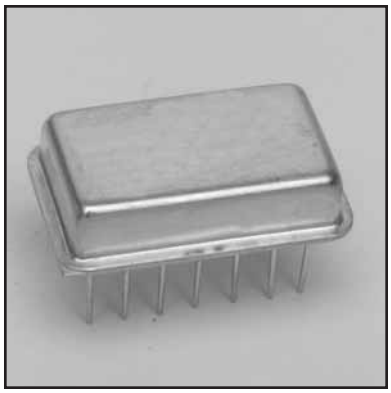

MODEL NUMBER DSW22023

GaAs SP2T

FEATURES

- 20-550 MHz
- Low Insertion Loss
- Low VSWR
- Broad Frequency Range
- Low DC Power

SP2T

www.Data

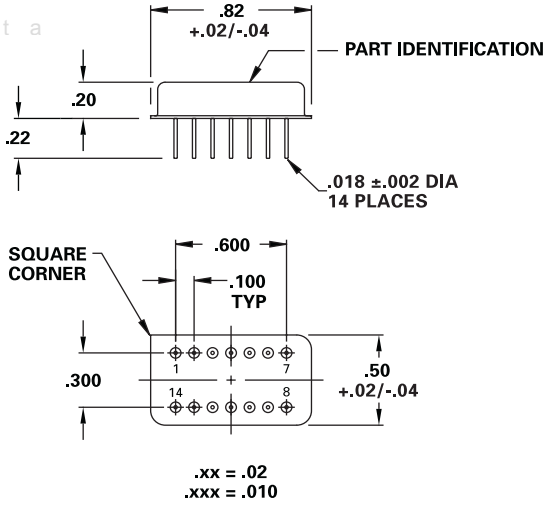

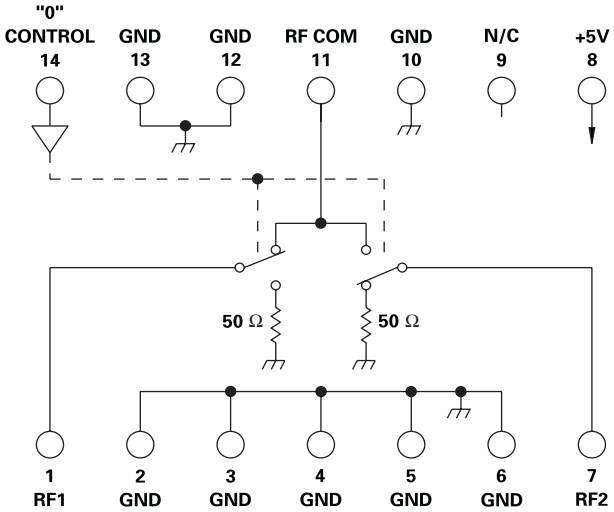

N/C = NO INTERNAL CONNECTION

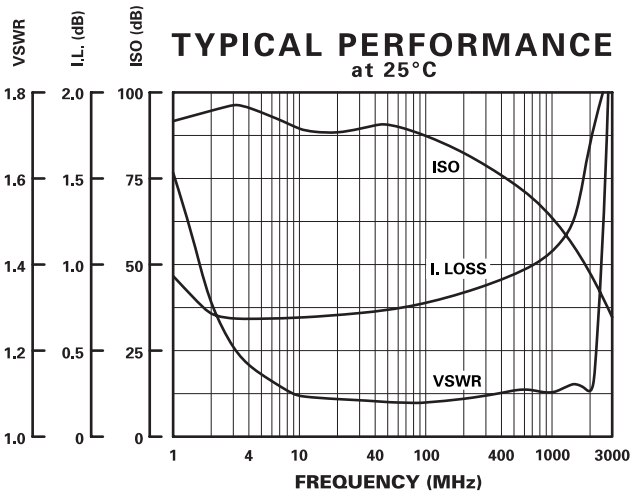

GUARANTEED PERFORMANCE

Parameter		Min	Typ	Max	Units	Conditions
Operating Frequency		20		550	MHz	
DC Current			0.2	5	mA	At +5 VDC Supply
Control Type			TTL			1 Line "0" = Pin 11 To Pin 1 "1" = Pin 11 To Pin 7
Control Current	*High*		±0.1		µA	VIH = +2.7V
	Low		±0.1		µA	VIL = +0.5V
Isolation		55	72		dB	
Insertion Loss			0.90	1.3	dB	
VSWR	*Thru*		1.11/1	1.3/1		
	Termination		1.06/1	2/1		
Impedance			50		OHMS	
Switching Speed			0.25	6	µSec	50% TTL to 90% / 10% RF
Transition (Rise/Fall) Time			20		nSec	10% / 90% or 90% / 10% RF
Switching (Video) Transients			40		mV	Peak Value
Intercept Points	*2nd*		+82		dBm	70 MHz / 50 MHz
	3rd	+30	+50		dBm	35 MHz / 50 MHz
RF Power	*Operate*		+19	+5	dBm	0.1 dB Compression
	No Damage			+30	dBm	
Operating Temperature		-55	+25	+125	°C	TA

LOGIC TABLE

CONTROL LINE	RF PATH
"0"	RF COM TO RF 1 (PIN 11 TO PIN 1)
"1"	RF COM TO RF 2 (PIN 11 TO PIN 7)

DAICO *Industries*

310.507.3242 • FAX 310.507.5701 • www.daico.com

www.DataSheet4U.com