FOXCONN®

SPECIFICATIONS

D-SUB Connector

DV Series
Right Angle High Rise
Type, T/H
2.286mm [.090"] Pitch
15 Pin

Mechanical

Mating Force: *4.54kgf max.*
Unmating Force: *0.34kgf min.*
Durability: *500 Cycles*

Electrical

Current Rating: *2A*
Contact Resistance: *35mΩ max.*
Dielectric Withstanding Voltage: *1000V AC/1min min.*
Insulation Resistance: *5000MΩ min.*

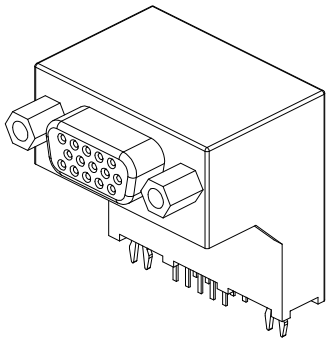

Physical

Housing: *Thermoplastic, UL 94V-0 rated in Blue 661C Color*
Contact: *Copper alloy*
Plating: *See "ORDERING INFORMATION"*
Operating Temperature: *-55℃ to +105℃*

DRAWING

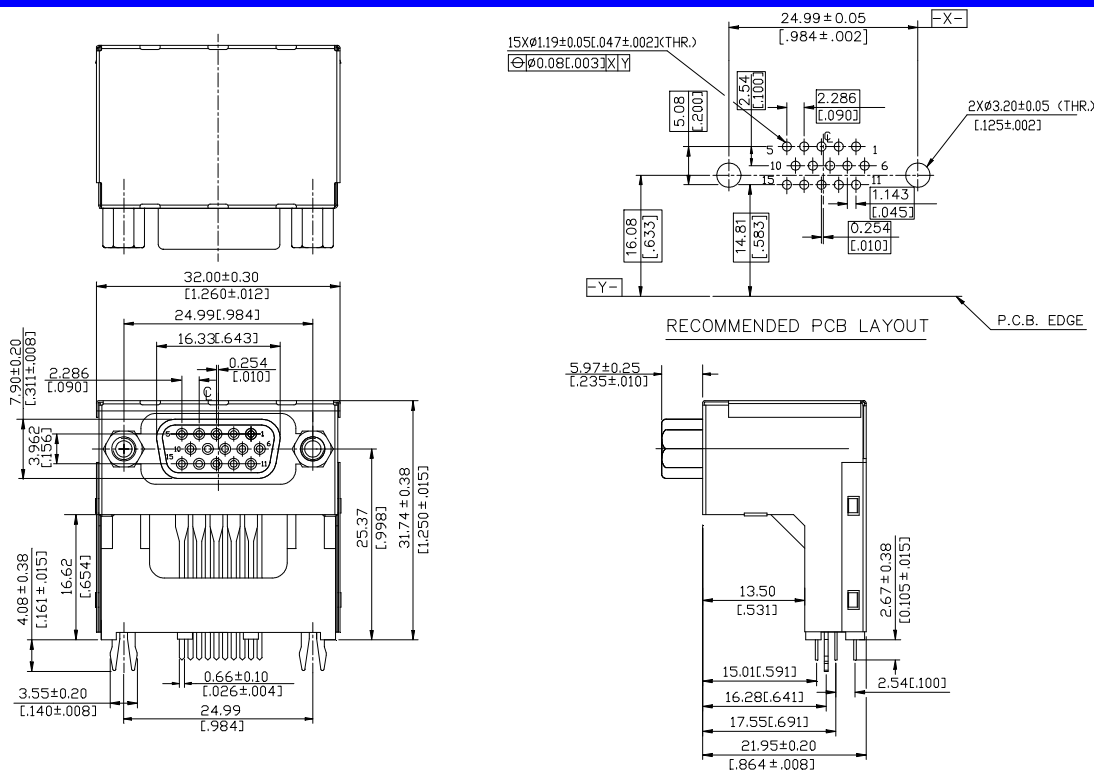

ORDERING INFORMATION

PRODUCT NO.: DV 1 1 2 6 * - 25WD - 4 F

- VGA Series
- Body Type
  1=Right Angle
- Termination Type
  1=Female
- No. of Pos.
  2=H/D 15 Pin
- Body Length
- Contact Area Plating
  1=Gold Flash
- Extension Code
- Tray Packing
- Lead Free Code

All specification & dimensions are subject to change, please call your nearest Foxconn sales representative for update information.