EF20 SERIES POWER TRANSFORMER MODULES

PRODUCT OVERVIEW:THT POWER THANSFORMERS

Characteristics

High insulation type High efficiency

IEC60950 Compatible

Operating temperature range:-40℃to +85℃

Applications

Lighting

metering

industrial Controls

White Goods

Telecom

DC/DC Converter

Bobbin Winding Area

Width(mm)	Build(mm)	Perimeter(mm)
12.5	3.3	30.3

CORE DATA

Ae(mm^2)	Ve(mm^3)	Le(mm)
32	1472	46

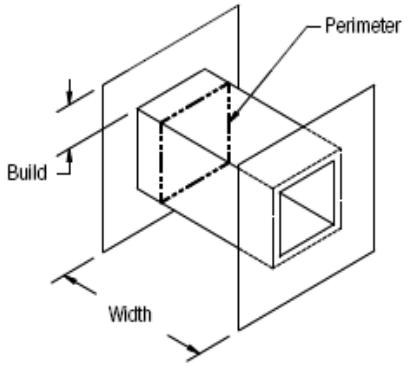

POWER LEVEL(W)

Flyback	Forward	Push-pull
32	47	95

Test frequency:100KHz

THT Vertical

Dimensions & Footprint

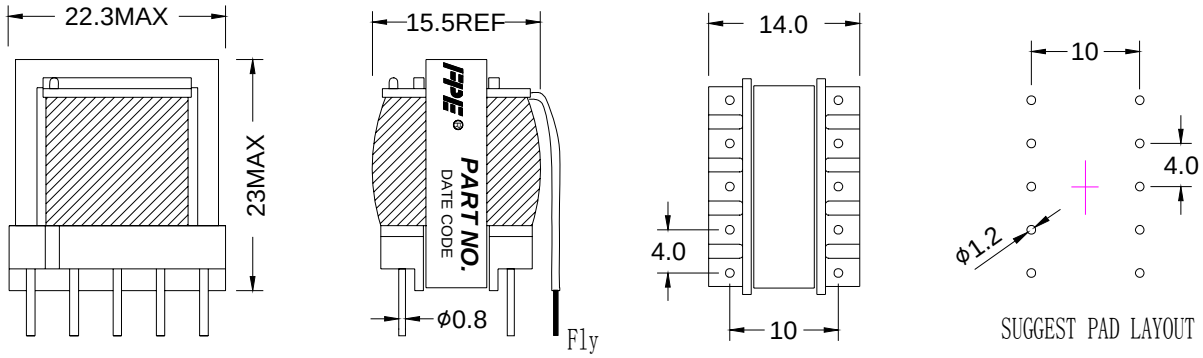

THT Horizontal

Dimensions & Footprint

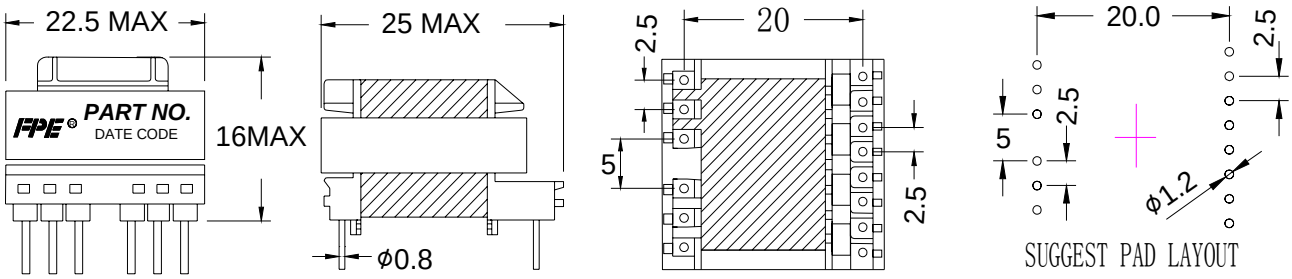

TaiWan Kinji Technology Limited
TEL:+886-3-3310896
FAX:+886-3-3310865

DongGuan Meixin Technology Co.,Ltd
TEL:+86-769-86761589
FAX:+ 86-769-86761549

ShangHai Qinshen Technology Co.,Ltd
TEL:+86-798-2620089
FAX:+ 86-798-2620186