JIANGSU CHANGJIANG ELECTRONICS TECHNOLOGY CO., LTD

SOD-523 Plastic-Encapsulate Diodes

ESDBVD5V0D5 Bi-direction ESD Protection Diode

DESCRIPTION

Designed to protect voltage sensitive electronic components from ESD and other transients. Excellent clamping capability, low leakage, low capacitance, and fast response time provide best in class protection on designs that are exposed to ESD.

The combination of small size, low capacitance, and high level of ESD protection makes them a flexible solution for applications such as HDMI, Display Port TM, and MDDI interfaces. It is designed to replace multiplayer varistors (MLV) in consumer equipments applications such as mobile phone, notebook, PAD, STB, LCD TV etc.

SOD-523

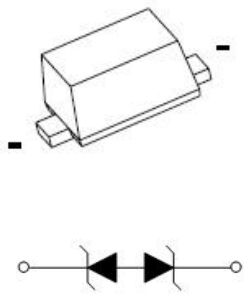

FEATURES

- Bi-directional ESD protection of one line
- Low capacitance: 3pF(Typ.)
- Low reverse stand−off voltage: 5V
- Low reverse clamping voltage
- Low leakage current
- Excellent package:1.2mm×0.8mm×0.6mm
- Fast response time
- JESD22-A114-B ESD Rating of class 3B per human body model
- IEC 61000-4-2 Level 4 ESD protection

APPLICATIONS

- Computers and peripherals
- High speed data lines
- Audio and video equipment
- Cellular handsets and accessories
- Subscriber identity module(SIM) card protection
- Portable electronics
- FireWire
- Other electronics equipments communi-cation systems

MARKING

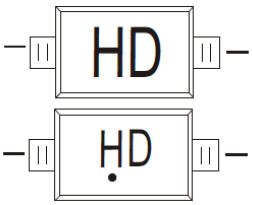

Front side

HD = Device code

Solid dot = Green molding compound device,if none, the normal device

MAXIMUM RATINGS (T_a=25℃ unless otherwise noted)

Parameter		Symbol	Limit	Unit
IEC 61000-4-2 ESD Voltage	Air Model	V_{ESD}(1)	±15	kV
	Contact Model		±15	
JESD22-A114-B ESD Voltage	Per Human Body Model		±16	
ESD Voltage	Machine Model		±0.4	
Peak Pulse Power		P_{PP}(2)	52	W
Peak Pulse Current		I_{PP}(2)	4	A
Lead Solder Temperature − Maximum (10 Second Duration)		T_L	260	℃
Junction Temperature		T_j	150	℃
Storage Temperature Range		T_{stg}	-55 ~ +150	℃

(1).Device stressed with ten non-repetitive ESD pulses.

(2).Non-repetitive current pulse 8/20μs exponential decay waveform according to IEC61000-4-5.

ESD standards compliance

IEC61000-4-2 Standard

Contact Discharge		Air Discharge	
Level	Test Voltage kV	Level	Test Voltage kV
1	2	1	2
2	4	2	4
3	6	3	8
4	8	4	15

JESD22-A114-B Standard

ESD Class	Human Body Discharge V
0	0～249
1A 1B 1C	250～499 500～999 1000～1999
2	2000～3999
3A 3B	4000～7999 8000～15999

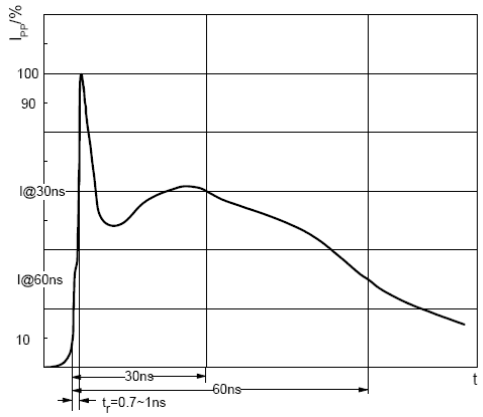

ESD pulse waveform according to IEC61000-4-2

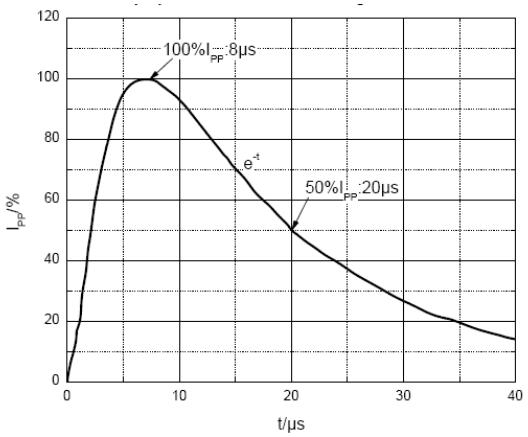

8/20μs pulse waveform according to IEC 61000-4-5

ELECTRICAL PARAMETER

Symbol	Parameter
V_C	Clamping Voltage @ I_{PP}
I_{PP}	Peak Pulse Current
V_{BR}	Breakdown Voltage @ I_T
I_T	Test Current
I_R	Reverse Leakage Current @ V_{RWM}
V_{RWM}	Reverse Standoff Voltage

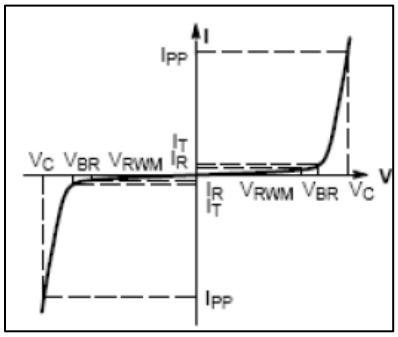

V-I characteristics for a Bi-directional TVS

ELECTRICAL CHARACTERISTICS(T_a=25℃ unless otherwise specified)

Parameter	Symbol	Test conditions	Min	Typ	Max	Unit
Reverse stand off voltage	V_{RWM} (1)				5	V
Reverse leakage current	I_R	V_{RWM}=5V			1	μA
Breakdown voltage	$V_{(BR)}$	I_T=1mA	5.6		8	V
Clamping voltage	V_C (2)	I_{PP}=4A			13	V
Junction capacitance	C_J	V_R=0V,f=1MHz		3		pF

(1).Other voltages available upon request.

(2).Non-repetitive current pulse 8/20μs exponential decay waveform according to IEC61000-4-5

TYPICAL CHARACTERISTICS

Reverse Characteristics

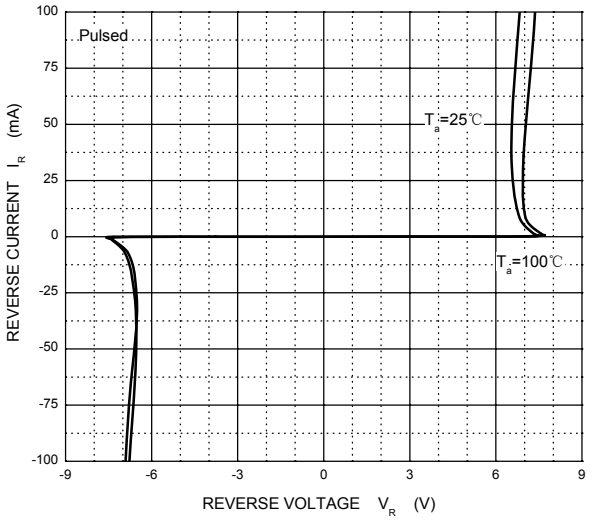

Capacitance Characteristics

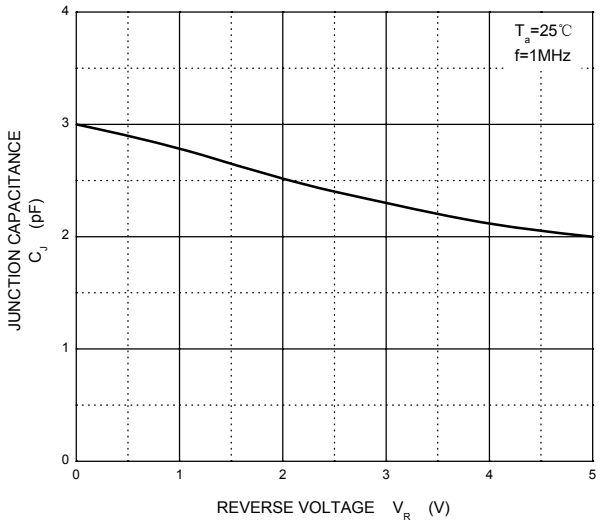

V_C ---- I_{PP}

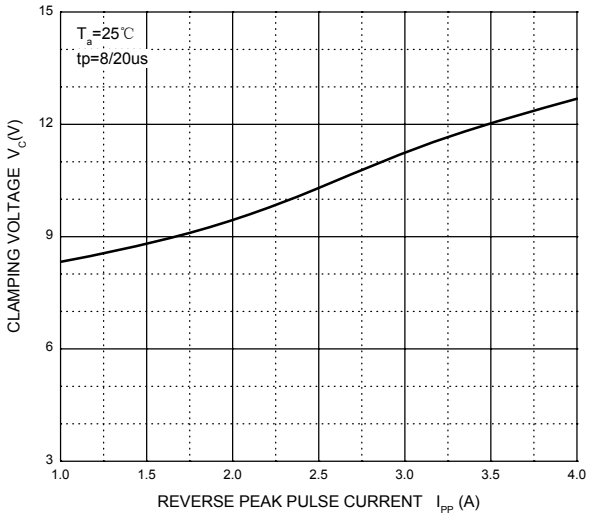

PACKAGE OUTLINE AND PAD LAYOUT INFORMATION

SOD-523 Package Outline Dimensions

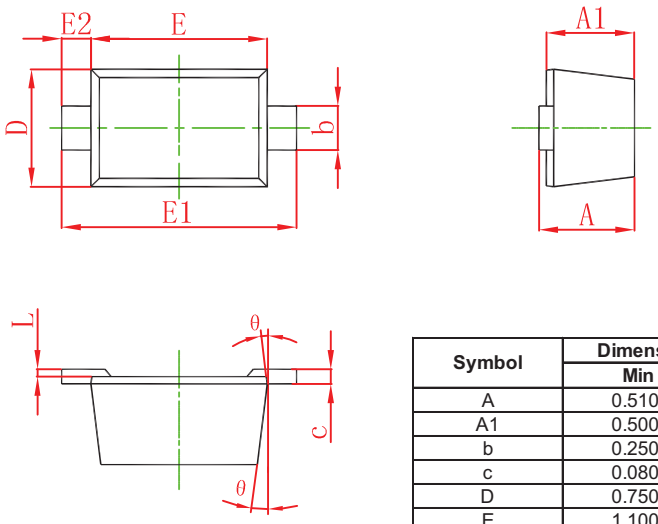

Symbol	Dimensions In Millimeters		Dimensions In Inches	
	Min	Max	Min	Max
A	0.510	0.770	0.020	0.031
A1	0.500	0.700	0.020	0.028
b	0.250	0.350	0.010	0.014
c	0.080	0.150	0.003	0.006
D	0.750	0.850	0.030	0.033
E	1.100	1.300	0.043	0.051
E1	1.500	1.700	0.059	0.067
E2	0.200 REF		0.008 REF	
L	0.010	0.070	0.001	0.003
θ	7° REF		7° REF	

SOD-523 Suggested Pad Layout

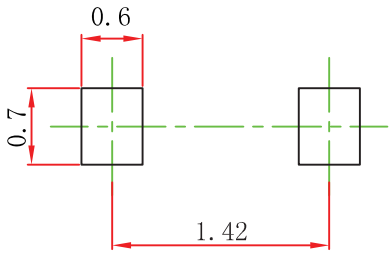

Note:
1.Controlling dimension:in millimeters.
2.General tolerance:± 0.05mm.
3.The pad layout is for reference purposes only.

NOTICE

JCET reserve the right to make modifications,enhancements, improvements, corrections or other changes without further notice to any product herein.JCET does not assume any liability arising out of the application or use of any product described herein.

TAPE AND REEL INFORMATION

SOD-523 Embossed Carrier Tape

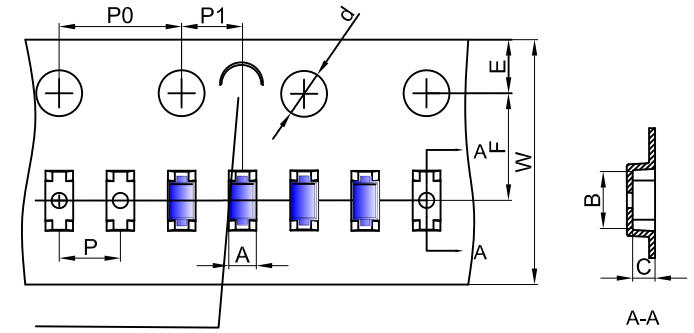

NOTE:TO CAVE 'C' ON CARRIER TAPE PER 120MM

Packaging Description:

SOD-523 parts are shipped in tape. The carrier tape is made from a dissipative (carbon filled) polycarbonate resin. The cover tape is a multilayer film (Heat Activated Adhesive in nature) primarily composed of polyester film, adhesive layer, sealant, and anti-static sprayed agent. These reeled parts in standard option are shipped with 8,000 units per 7" or 17.8cm diameter reel. The reels are clear in color and is made of polystyrene plastic (anti-static coated).

Dimensions are in millimeter										
Pkg type	A	B	C	d	E	F	P0	P	P1	W
SOD-523	0.9	1.94	0.73	Ø1.50	1.75	3.50	4.00	2.00	2.00	8.00

SOD-523 Tape Leader and Trailer

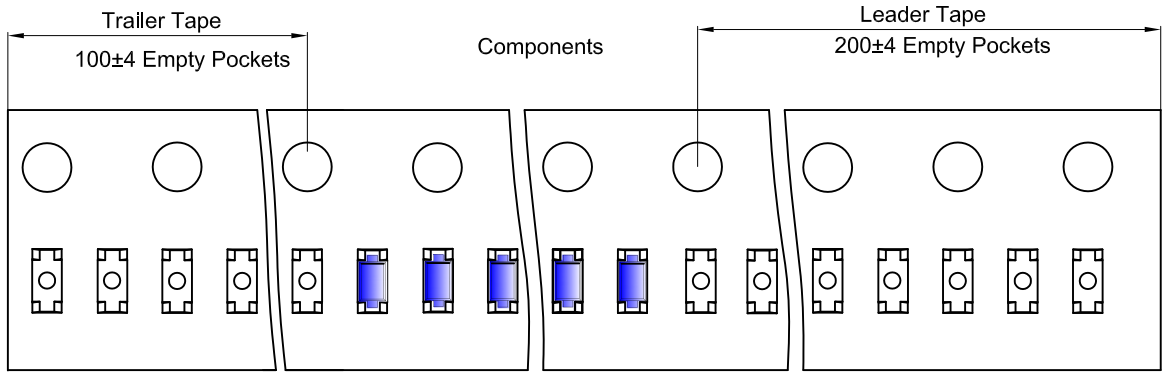

SOD-523 Reel

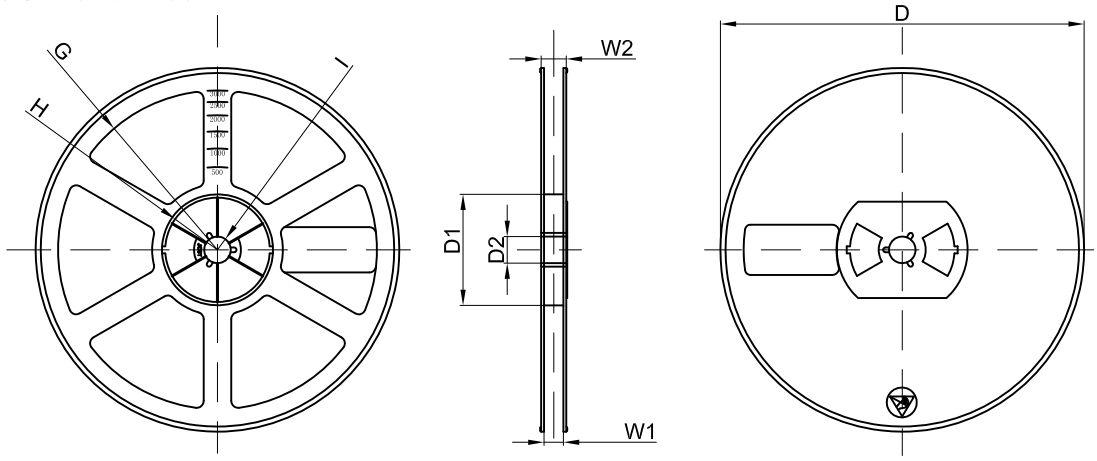

Dimensions are in millimeter								
Reel Option	D	D1	D2	G	H	I	W1	W2
7"Dia	Ø178.00	54.40	13.00	R78.00	R25.60	R6.50	9.50	12.30

REEL	Reel Size	Box	Box Size(mm)	Carton	Carton Size(mm)	G.W.(kg)
8000 pcs	7 inch	120,000 pcs	203×203×195	480,000 pcs	438×438×220	