TO :

Date :

HannStar Product Specification

Preliminary

Model : **HSD141PK11 -A**

Note:1.Please contact HannStar Display Corp. before designing your product based on this module specification.

2.The information contained herein is presented merely to indicate the characteristics and performance of our products. No responsibility is assumed by HannStar for any intellectual property claims or other problems that may result from application based on the module described herein.

The information contained in this document is the exclusive property of HannStar Display Corporation. It shall not be disclosed, distributed or reproduced in whole or in part without written permission of HannStar Display Corporation.

Datasheet4U.com

www.DataSheet4U.com

Record of Revisions

Rev.	Date	Description of change
1.0	Mar.08, 2001	● HSD141PK11-A specification was first issued.

The information contained in this document is the exclusive property of HannStar Display Corporation. It shall not be disclosed, distributed or reproduced in whole or in part without written permission of HannStar Display Corporation.

Contents

1.0 General descriptions ……. p.4

2.0 Absolute maximum ratings …….. p.5

3.0 Optical characteristics …….. p.6

4.0 Electrical characteristics …….. p.11

5.0 Block diagram ……. p.13

6.0 Interface pin connection …….. p.14

7.0 Interface timing ……. p.21

8.0 Outline dimension ……. p.26

9.0 Lot mark ……. p.28

10.0 General precaution …….. p.29

11.0 Visual inspection specification ……. p.31

The information contained in this document is the exclusive property of HannStar Display Corporation. It shall not be disclosed, distributed or reproduced in whole or in part without written permission of HannStar Display Corporation.

1.0 GENERAL DESCRIPTION

1.1 Introduction

HannStar Display model HSD141PK11-A is a color active matrix thin film transistor (TFT) liquid crystal display(LCD) that uses amorphous silicon TFT as a switching device. This model is composed of a TFT LCD panel, a driving circuit and a back light system. This TFT LCD has a 14.1 inch diagonally measured active display area with SXGA+ resolution (1050 vertical by 1400 horizontal pixel array) and can display up to 262,144 colors.

1.2 Features

- 14.1 SXGA+ for Notebook PC
- LVDS interface system

1.3 Applications

- Notebook PC
- Moniputers
- Display terminals for AV applications
- Monitors for industrial applications

1.4 General information

Item	Specification	Unit
Display area	285.6(H) x 214.2(V)	mm
Number of Pixel	1400(H) x 1050(V)	pixels
Pixel pitch	0.204(H) x 0.204(V)	mm
Pixel arrangement	RGB Vertical stripe	
Display color	262,144	colors
Display mode	Normally white	
Surface treatment	Antiglare, Hard-Coating(3H)	
Weight	540	g
Back-light	Single CCFL (Sidelight type)	
Input signal	2-ch LVDS	
Optimum viewing direction	6 o'clock	

The information contained in this document is the exclusive property of HannStar Display Corporation. It shall not be disclosed, distributed or reproduced in whole or in part without written permission of HannStar Display Corporation.

1.5 Mechanical Information

Item		Min.	Typ.	Max.	Unit
Module Size	Horizontal(H)	298.0	298.5	299.0	Mm
	Vertical(V)	226.0	226.5	227.0	Mm
	Depth(D)	---	5.8	6.1	Mm
Weight (Without inverter)		---	540	TBD	G

2.0 ABSOLUTE MAXIMUM RATING

2.1 Absolute Rating of Environment

Item	Symbol	Min.	Max.	Unit	Note
Storage temperature	T_{STG}	-20	65	°C	
Operating temperature	T_{OPR}	0	50	°C	
Vibration(non-operating)	V_{NOP}	--	1.5	G	(1)
Shock(non-operating)	S_{NOP}	--	210	G	(2)
Storage humidity	H_{STG}	10	80	%RH	(3)
Operating humidity	H_{OP}	10	80	%RH	(3)
Low pressure(operating)	P_{LOP}	697	--	hPa	(4)
Low pressure(non-operating)	P_{LNOP}	116	--	hPa	(5)

Note (1) 10-500-10Hz sweep/cycle, X,Y,Z each directions, 0.5hr each
(2) 3ms, ±X, ±Y, ±Z direction, one time each. For this shock test, it is necessary to fill the silicon rubber between the shock jig as buffer.
(3) Max wet bulb temp.=39°C
(4) 2hrs. (10000 feet)
(5) 24hrs. (50000 feet)

2.2 Electrical Absolute Rating

2.2.1 TFT LCD Module

Item	Symbol	Min.	Max.	Unit	Note
Power supply voltage	V_{DD}	-0.3	4.0	V	(1)
Logic input voltage	V_{IN}	-0.3	V_{DD}+0.3	V	(1)

2.2.2 Back-Light Unit

Item	Symbol	Min.	Max.	Unit	Note
Lamp voltage	V_{FL}	0	2000	$V_{(rms)}$	(1)
Lamp current	I_L	--	7.0	mA	(1)
Lamp frequency	f_L	0	100	kHz	(1)

The information contained in this document is the exclusive property of HannStar Display Corporation. It shall not be disclosed, distributed or reproduced in whole or in part without written permission of HannStar Display Corporation.

Note (1) Permanent damage may occur to the LCD module if beyond this specification. Functional operation should be restricted to the conditions described under normally operating conditions.

3.0 OPTICAL CHARACTERISTICS

3.1 Optical specification

Item		Symbol	Condition	Min.	Typ.	Max.	Unit	Note
Contrast		CR	Θ=0 Φ=0 Normal viewing angle	—	250	—		(1)(2)
Response time	Rising	T_R		—	15	—	msec	(1)(3)
	Falling	T_F		—	35	—		
White luminance (Average of 5 points)		Y_L		—	150	—	cd/m^2	(1)(4)(5) (I_L=6.0mA)
Color chromaticity (CIE1931)	Red	R_x		(0.580)	(0.610)	(0.640)		(1)(4)
		R_y		(0.307)	(0.337)	(0.367)		
	Green	G_x		(0.298)	(0.328)	(0.358)		
		G_y		(0.527)	(0.557)	(0.587)		
	Blue	B_x		(0.119)	(0.149)	(0.179)		
		B_y		(0.096)	(0.126)	(0.156)		
	White	W_x		(0.299)	(0.329)	(0.359)		
		W_y		(0.305)	(0.335)	(0.365)		
Viewing angle	Hor.	Θ_L	CR>10	--	(40)	—		
		Θ_R		--	(40)	—		
	Ver.	Θ_U		--	(20)	—		
		Θ_D		--	(30)	—		
Brightness uniformity		B_{UNI}	Θ=0 Φ=0	70	—	—	%	(6)
Crosstalk		CT(n)		--	—	1.3	%	(7)

3.2 Measuring Condition

- Measuring surrounding : dark room
- Lamp current I_{FL} : 6.0±0.1mA(rms), Inverter : HIU-757
- V_{DD}=3.3V±0.05V
- Surrounding temperature : 25±2°C
- 30min. warm-up time.

The information contained in this document is the exclusive property of HannStar Display Corporation. It shall not be disclosed, distributed or reproduced in whole or in part without written permission of HannStar Display Corporation.

3.3 Measuring Equipment

- LCD-7000 of Otsuka Electrics Corp., which utilized MCPD-7000 for Chromaticity and BM-7 for other optical characteristics.
- Measuring spot size : 2X500Xtan1°≒17.455

Note (1) Definition of Viewing Angle :

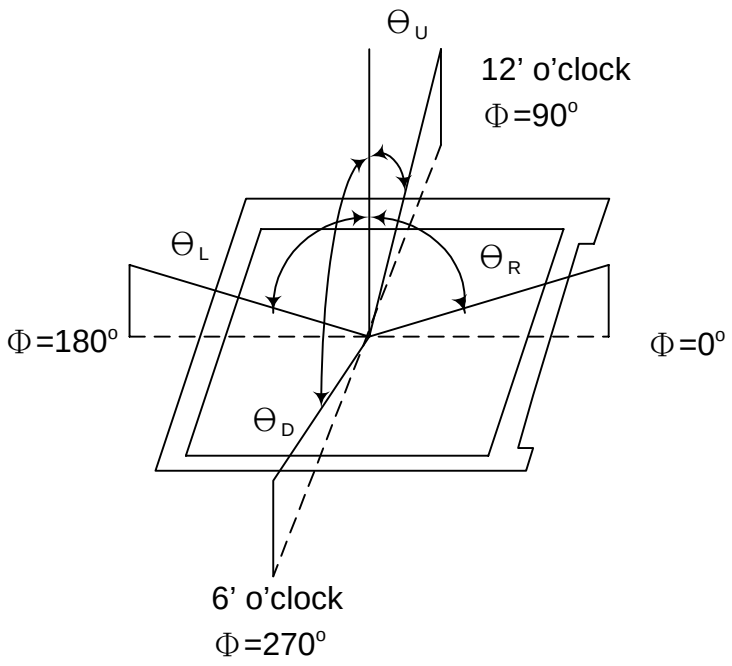

Note (2) Definition of Contrast Ratio(CR) :
measured at the center point of panel

$$CR = \frac{\text{Luminance with all pixels white (L63)}}{\text{Luminance with all pixels black (L0)}}$$

The information contained in this document is the exclusive property of HannStar Display Corporation. It shall not be disclosed, distributed or reproduced in whole or in part without written permission of HannStar Display Corporation.

Note (3) Definition of Response Time : Sum of T_R and T_F

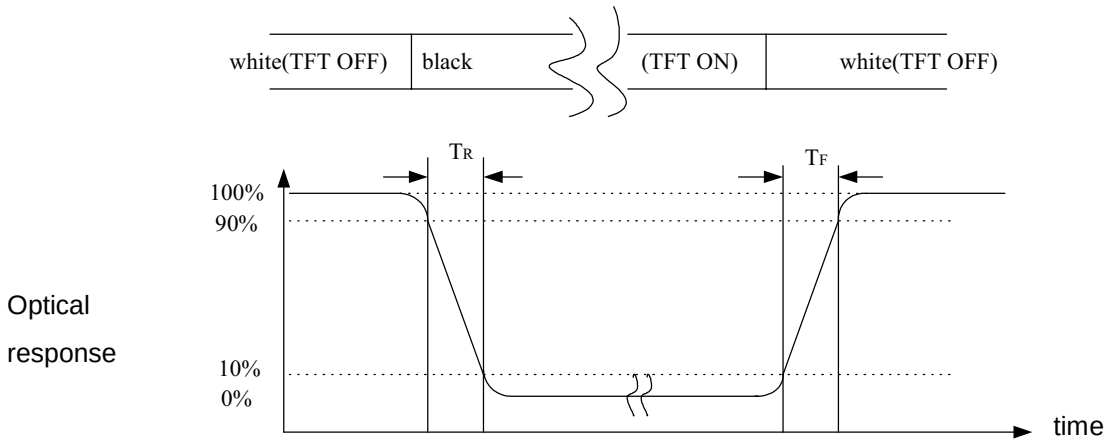

Note (4) Definition of brightness uniformity

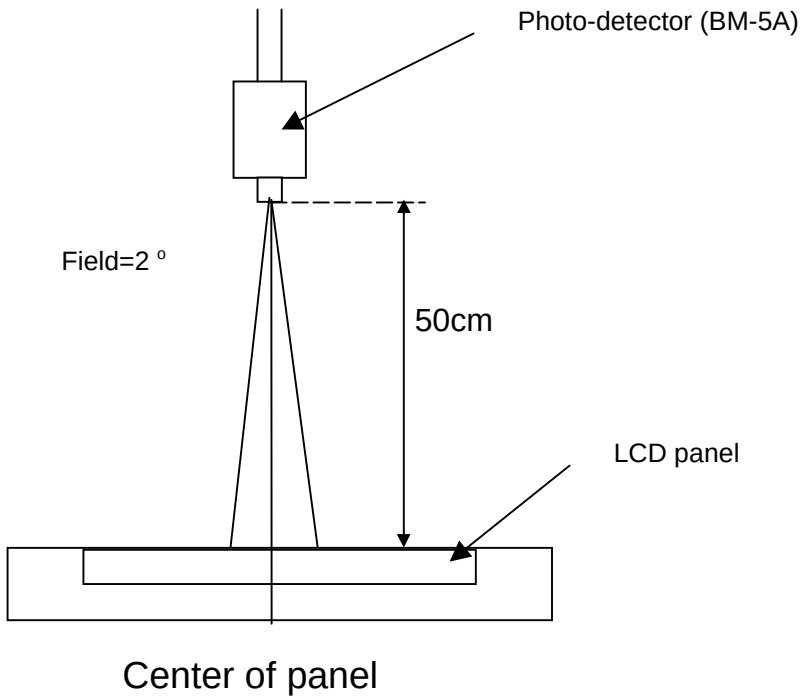

The information contained in this document is the exclusive property of HannStar Display Corporation. It shall not be disclosed, distributed or reproduced in whole or in part without written permission of HannStar Display Corporation.

Note (5) Definition of Average Luminance of White (5 Point)

$$\text{Average Luminance} = \frac{Y_1+Y_2+Y_3+Y_4+Y_5}{5}$$

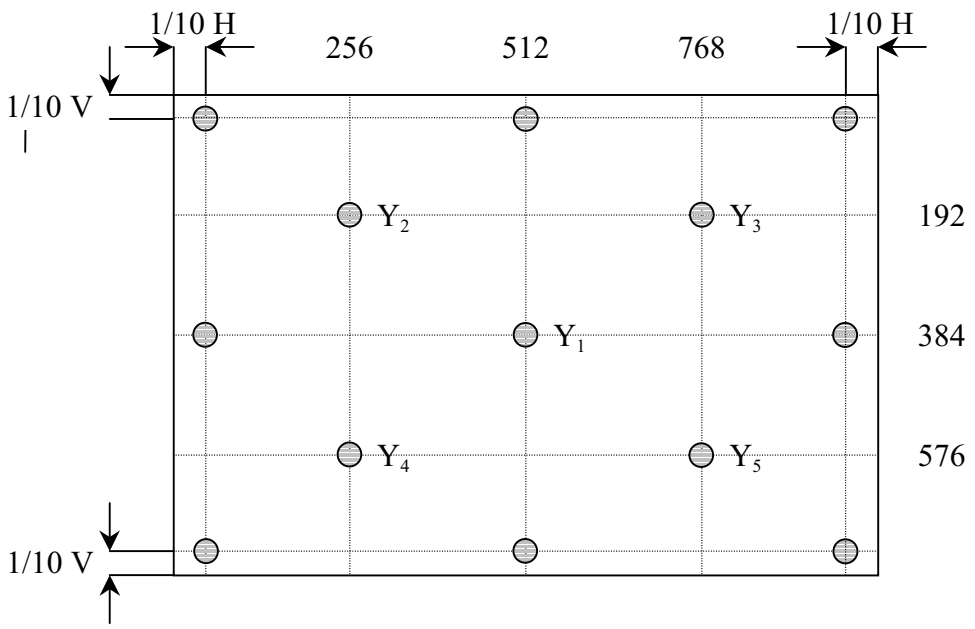

Note (6) Definition of brightness uniformity

$$\text{Luminance uniformity} = \frac{\text{(Min Luminance of 13 points)}}{\text{(Max Luminance of 13 points)}} \times 100\%$$

The information contained in this document is the exclusive property of HannStar Display Corporation. It shall not be disclosed, distributed or reproduced in whole or in part without written permission of HannStar Display Corporation.

Note (7) Definition of crosstalk CT(1) ~ CT(4)

$$CT(n) = \frac{|L(n) - LB(n)|}{L(n)} \times 100\% \text{ , } n = 1 \sim 4$$

Where L(n) = Luminance of point "n" at pattern A (cd/m^2) , n=1～4

LB(n) = Luminance of point "n" at pattern B (cd/m^2) , n=1～4

The location measured will be exactly the same in both patterns.

L0 : Luminance with all pixels black

L63 : Luminance with all pixels white

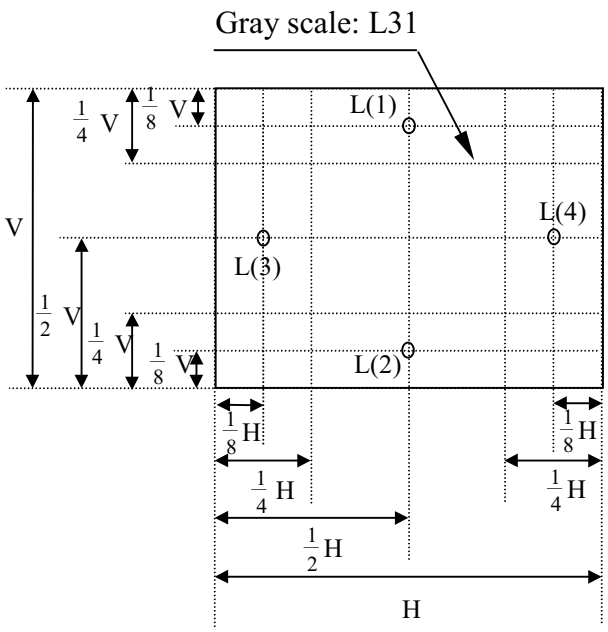

Pattern A

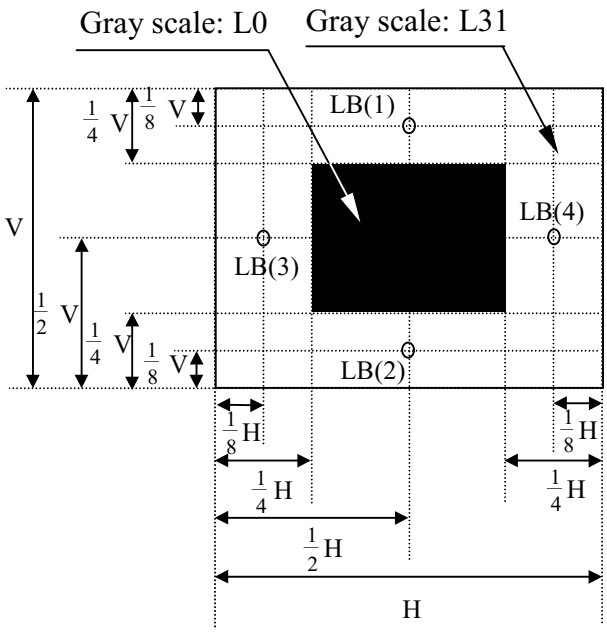

Pattern B

The information contained in this document is the exclusive property of HannStar Display Corporation. It shall not be disclosed, distributed or reproduced in whole or in part without written permission of HannStar Display Corporation.

4.0 ELECTRICAL CHARACTERISTICS

4.1 TFT LCD Module

Item		Symbol	Min.	Typ.	Max.	Unit	Note
Voltage of power supply		V_{DD}	3.0	3.3	3.6	V	
Input voitage	High	V_{IH}	2.4	--	3.6	V	
	Low	V_{IL}	0	--	0.9	V	
Current of power supply	Mosaic	I_{DD}	--	TBD (550)	--	mA	(1)
Vsync frequency		f_V	--	60.00	60.00	Hz	(2)
Hsync frequency		f_H	--	63.98	--	KHz	
Main frequency		f_{DCLK}	--	54.00	54.00	MHz	

Note (1) Mosaic : Dot checker image

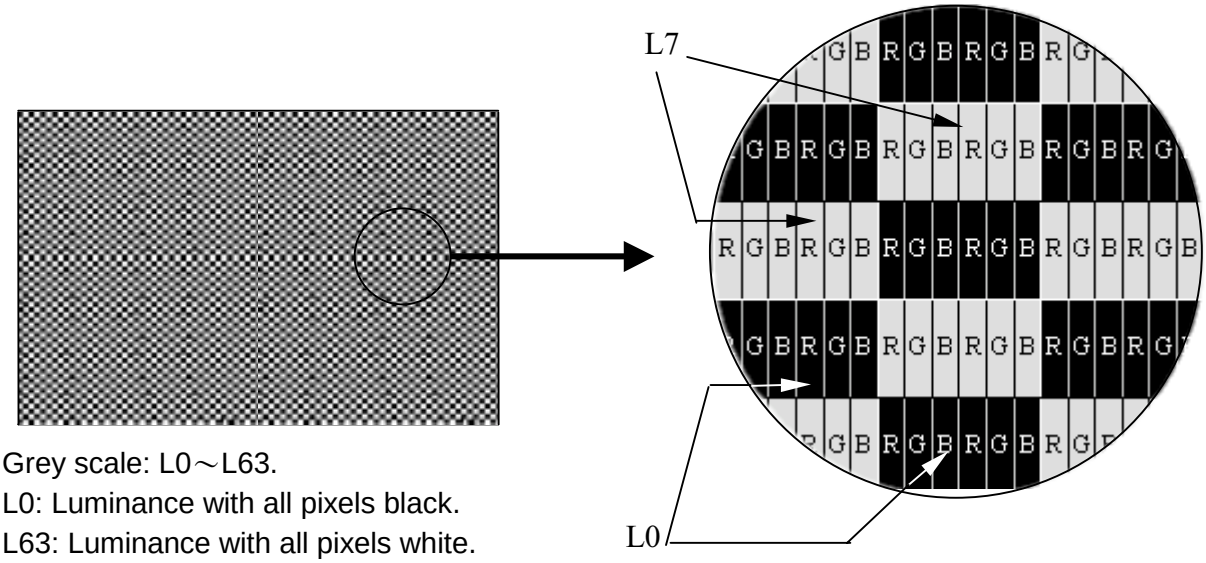

Grey scale: L0～L63.
L0: Luminance with all pixels black.
L63: Luminance with all pixels white.

Note (2) When f_v is too low, a flicker may be occurred on the display.

The information contained in this document is the exclusive property of HannStar Display Corporation. It shall not be disclosed, distributed or reproduced in whole or in part without written permission of HannStar Display Corporation.

4.2 Back-Light Unit

The back-light system is an edge-lighting type with 1 CCFL(Cold Cathode Fluorescent Lamp). The characteristics of the lamp1 is shown in the following tables.

Item	Symbol	Min.	Typ.	Max.	Unit	Note
Lamp current	IL	5.5	6.0	6.5	mA(rms)	(1)
Lamp voltage	VL	540	600	660	V(rms)	I_L=6.0mA
Frequency	fL	40	(51)	60	KHz	(2)
Operating life time	Hr	10,000	15,000	--	Hour	(3)
Startup voltage	Vs	--	--	700	V(rms)	at 25°C
				910		at 0°C

Note (1) Lamp current is measured with current meter for high frequency as shown below. Specified valued are for a lamp.

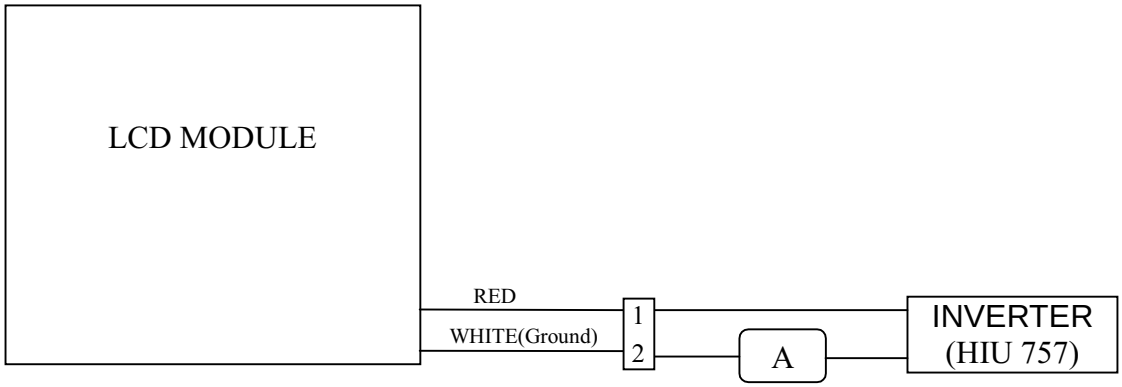

Note (2) Lamp frequency may produce interference with horizontal synchronous frequency and this may cause line flow on the display. Therefore lamp frequency shall be detached from the horizontal synchronous frequency and its harmonics as far as possible in order to avoid interference.

Note (3) Life time (Hr) can be defined as the time in which it continues to operate under the condition : Ta=25±3°C, I_L=6.0mA(rms) and f_L=51kHz until one of the following event occurs :

1. When the brightness becomes 50%
2. When the startup voltage(Vs) at 0°C becomes higher than the maximal Value of Vs specified above.

The information contained in this document is the exclusive property of HannStar Display Corporation. It shall not be disclosed, distributed or reproduced in whole or in part without written permission of HannStar Display Corporation.

5.0 BLOCK DIAGRAM

5.1 TFT LCD Module

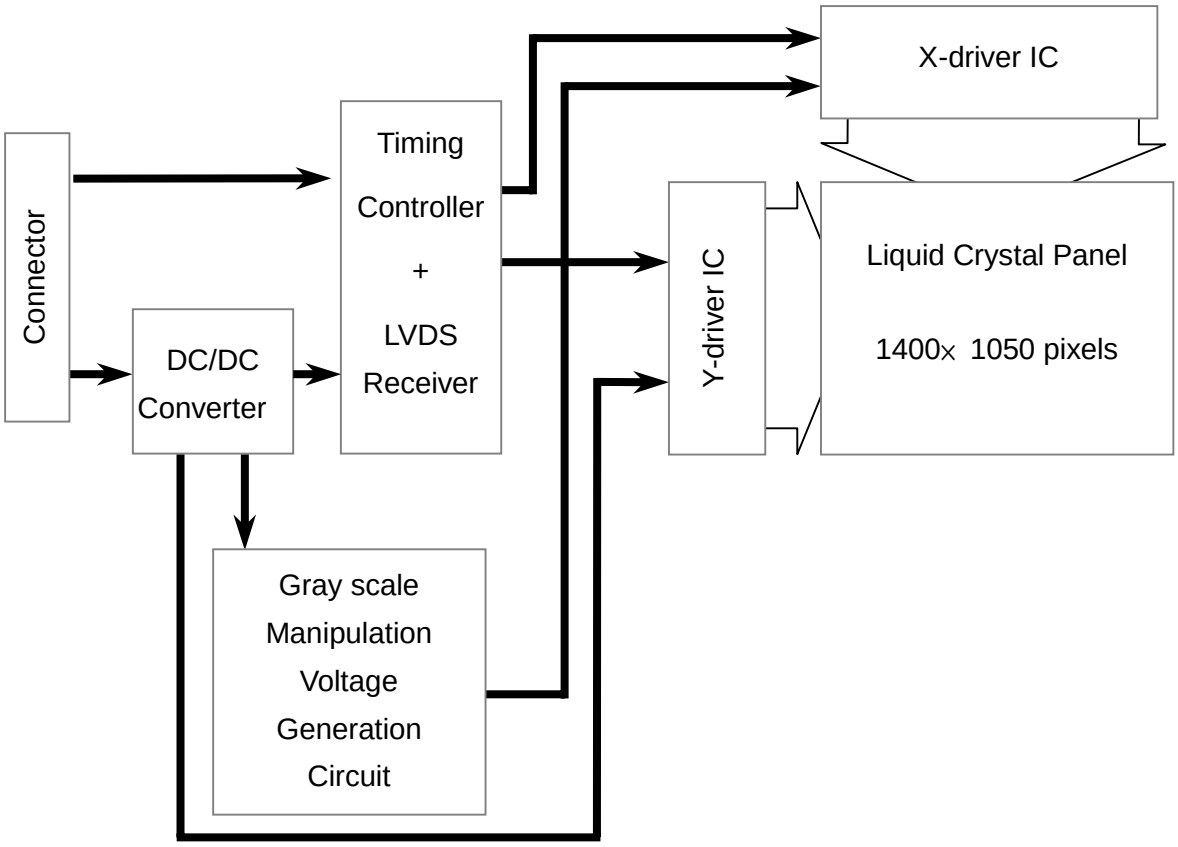

5.2 Back Light Unit

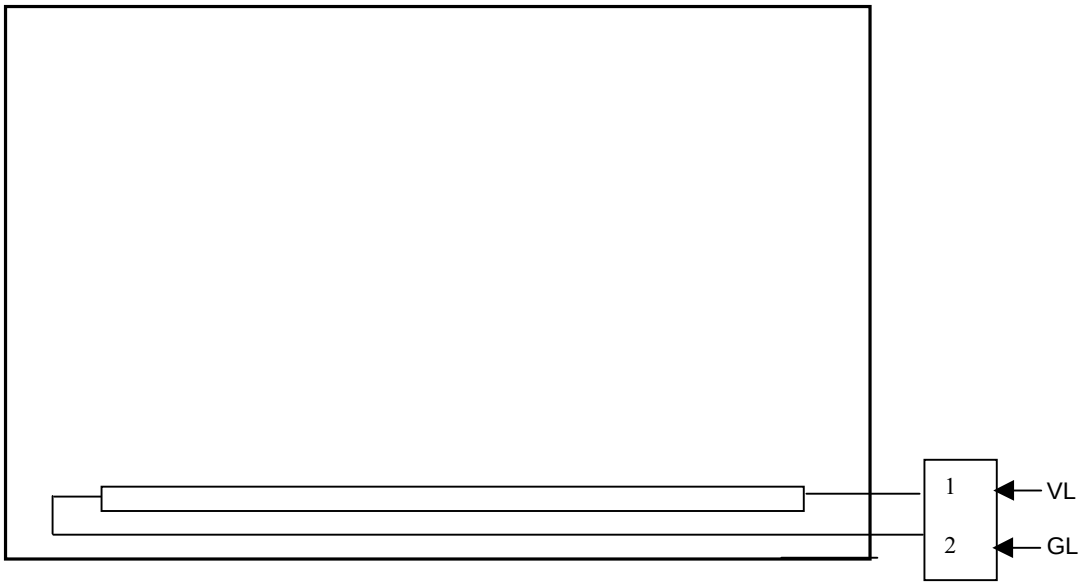

The information contained in this document is the exclusive property of HannStar Display Corporation. It shall not be disclosed, distributed or reproduced in whole or in part without written permission of HannStar Display Corporation.

6.0 INTERFACE PIN CONNECTION

6.1 TFT LCD Module

CN1[1)] INPUT SIGNAL (FI-XB30SR-HF11A/JAPAN AVIATION ELECTRONICS INDUSTRY,LTD.)[1)]

MATING CONNECTOR: FI-X30M,FI-X30MR

Terminal no.	Symbol	Function
1	GND	Ground
2	GND	Ground
3	VDD	Power Supply : +3.3V
4	VDD	Power Supply : +3.3V
5	NC	NC
6	NC	Reserved for supplier test point
7	NC	NC
8	NC	NC
9	EIN0-	EVEN Transmission Data of Pixels 0 (Negative : -)
10	EIN0+	EVEN Transmission Data of Pixels 0 (Positive : +)
11	GND	Ground
12	EIN1-	EVEN Transmission Data of Pixels 1 (Negative : -)
13	EIN1+	EVEN Transmission Data of Pixels 1 (Positive : +)
14	GND	Ground
15	EIN2-	EVEN Transmission Data of Pixels 2 (Negative : -)
16	EIN2+	EVEN Transmission Data of Pixels 2 (Positive : +)
17	GND	Ground
18	ECLK-	EVEN Sample Clock (Negative : -)
19	ECLK+	EVEN Sample Clock (Positive : +)
20	GND	Ground
21	OIN0-	ODD Transmission Data of Pixels 0 (Negative : -)
22	OIN0+	ODD Transmission Data of Pixels 0 (Positive : +)
23	GND	Ground
24	OIN1-	ODD Transmission Data of Pixels 1 (Negative : -)
25	OIN1+	ODD Transmission Data of Pixels 1 (Positive : +)
26	GND	Ground
27	OIN2-	ODD Transmission Data of Pixels 2 (Negative : -)
28	OIN2+	ODD Transmission Data of Pixels 2 (Positive : +)
29	GND	Ground
30	OCLK-	ODD Sample Clock (Negative : -)
31	OCLK+	ODD Sample Clock (Positive : +)
32	GND	Ground

Note 1) Please connect NC pin to nothing. Don't connect it to ground nor to other signal input. (NC pin should be open.)

6.2 Back-Light Unit

CN2 CCFL Power Source (BHTR-02VS-1) / JAPAN SOLDERLESS TERMINAL MFG CO., LTD.

Mating Connector : (SM02B-BHSS-1) / JAPAN SOLDERLESS TERMINAL MFG CO., LTD.

Terminal no.	Symbol	Function
1	V_L	CCFL power supply (high voltage)
2	G_L	CCFL power supply (low voltage)

The information contained in this document is the exclusive property of HannStar Display Corporation. It shall not be disclosed, distributed or reproduced in whole or in part without written permission of HannStar Display Corporation.

6.3 Relationship Between Displayed Color and Input

	Display	MSB R5	R4	R3	R2	R1	LSB R0	MSB G5	G4	G3	G2	G1	LSB G0	MSB B5	B4	B3	B2	B1	LSB B0	Gray scale level
Basic color	Black	L	L	L	L	L	L	L	L	L	L	L	L	L	L	L	L	L	L	-
	Blue	L	L	L	L	L	L	L	L	L	L	L	L	H	H	H	H	H	H	-
	Green	L	L	L	L	L	L	H	H	H	H	H	H	L	L	L	L	L	L	-
	Light Blue	L	L	L	L	L	L	H	H	H	H	H	H	H	H	H	H	H	H	-
	Red	H	H	H	H	H	H	L	L	L	L	L	L	L	L	L	L	L	L	-
	Purple	H	H	H	H	H	H	L	L	L	L	L	L	H	H	H	H	H	H	-
	Yellow	H	H	H	H	H	H	H	H	H	H	H	H	L	L	L	L	L	L	-
	White	H	H	H	H	H	H	H	H	H	H	H	H	H	H	H	H	H	H	-
Gray scale of Red	Black	L	L	L	L	L	L	L	L	L	L	L	L	L	L	L	L	L	L	L0
	Dark	L	L	L	L	L	H	L	L	L	L	L	L	L	L	L	L	L	L	L1
		L	L	L	L	H	L	L	L	L	L	L	L	L	L	L	L	L	L	L2
		:						:						:						L3…L60
	Light	H	H	H	H	L	H	L	L	L	L	L	L	L	L	L	L	L	L	L61
		H	H	H	H	H	L	L	L	L	L	L	L	L	L	L	L	L	L	L62
	Red	H	H	H	H	H	H	L	L	L	L	L	L	L	L	L	L	L	L	Red L63
Gray scale of Green	Black	L	L	L	L	L	L	L	L	L	L	L	L	L	L	L	L	L	L	L0
	Dark	L	L	L	L	L	L	L	L	L	L	L	H	L	L	L	L	L	L	L1
		L	L	L	L	L	L	L	L	L	L	H	L	L	L	L	L	L	L	L2
		:						:						:						L3…L60
	Light	L	L	L	L	L	L	H	H	H	H	L	H	L	L	L	L	L	L	L61
		L	L	L	L	L	L	H	H	H	H	H	L	L	L	L	L	L	L	L62
	Green	L	L	L	L	L	L	H	H	H	H	H	H	L	L	L	L	L	L	Green L63
Gray scale of Blue	Black	L	L	L	L	L	L	L	L	L	L	L	L	L	L	L	L	L	L	L0
	Dark	L	L	L	L	L	L	L	L	L	L	L	L	L	L	L	L	L	H	L1
		L	L	L	L	L	L	L	L	L	L	L	L	L	L	L	L	H	L	L2
		:						:						:						L3…L60
	Light	L	L	L	L	L	L	L	L	L	L	L	L	H	H	H	H	L	H	L61
		L	L	L	L	L	L	L	L	L	L	L	L	H	H	H	H	H	L	L62
	Blue	L	L	L	L	L	L	L	L	L	L	L	L	H	H	H	H	H	H	Blue L63
Gray scale of White & Black	Black	L	L	L	L	L	L	L	L	L	L	L	L	L	L	L	L	L	L	L0
	Dark	L	L	L	L	L	H	L	L	L	L	L	H	L	L	L	L	L	H	L1
		L	L	L	L	H	L	L	L	L	L	H	L	L	L	L	L	H	L	L2
		:						:						:						L3…L60
	Light	H	H	H	H	L	H	H	H	H	H	L	H	H	H	H	H	L	H	L61
		H	H	H	H	H	L	H	H	H	H	H	L	H	H	H	H	H	L	L62
	White	H	H	H	H	H	H	H	H	H	H	H	H	H	H	H	H	H	H	White L63

The information contained in this document is the exclusive property of HannStar Display Corporation. It shall not be disclosed, distributed or reproduced in whole or in part without written permission of HannStar Display Corporation.

6.4 Pixel Format

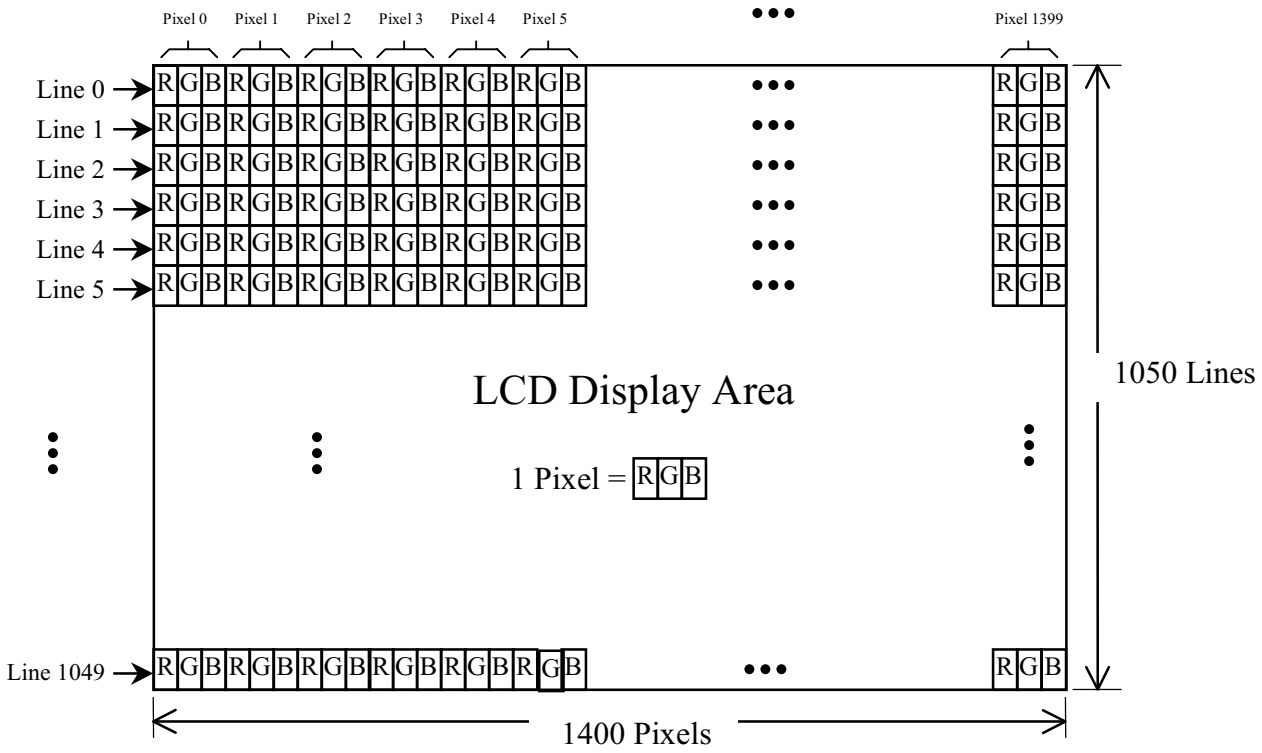

Note : The first pixel is Even pixel.

The information contained in this document is the exclusive property of HannStar Display Corporation. It shall not be disclosed, distributed or reproduced in whole or in part without written permission of HannStar Display Corporation.

6.5 RECOMMENDED TRANSMITTER TO HSD141PK11-A INTERFACE ASSIGNMENT

Case1: EVEN DATA (6bit transmitter)

THC63LVDM63A						
Input terminal no.		Input signal (Graphics controller output signal)		Output signal	HSD141PK11-A interface(CN1)	
Symbol	Terminal	Symbol	Function	Symbol	Terminal	Symbol
T1IN0/TA0	44	RE0	RED Pixels Display Data (LSB)	T1OUT0- T1OUT0+	No. 9 No. 10	EIN0- EIN0+
T1IN1/TA1	45	RE1	RED Pixels Display Data			
T1IN2/TA2	47	RE2	RED Pixels Display Data			
T1IN3/TA3	48	RE3	RED Pixels Display Data			
T1IN4/TA4	1	RE4	RED Pixels Display Data			
T1IN5/TA5	3	RE5	RED Pixels Display Data (MSB)			
T1IN6/TA6	4	GE0	GREEN Pixels Display Data (LSB)			
T1IN7/TB0	6	GE1	GREEN Pixels Display Data	T1OUT1- T1OUT1+	No. 12 No. 13	EIN1- EIN1+
T1IN8/TB1	7	GE2	GREEN Pixels Display Data			
T1IN9/TB2	9	GE3	GREEN Pixels Display Data			
T1IN10/TB3	10	GE4	GREEN Pixels Display Data			
T1IN11/TB4	12	GE5	GREEN Pixels Display Data (MSB)			
T1IN12/TB5	13	BE0	BLUE Pixels Display Data (LSB)			
T1IN13/TB6	15	BE1	BLUE Pixels Display Data			
T1IN14/TC0	16	BE2	BLUE Pixels Display Data	T1OUT2- T1OUT2+	No. 15 No. 16	EIN2- EIN2+
T1IN15/TC1	18	BE3	BLUE Pixels Display Data			
T1IN16/TC2	19	BE4	BLUE Pixels Display Data			
T1IN17/TC3	20	BE5	BLUE Pixels Display Data (MSB)			
T1IN18/TC4	22	HSYNC	H-Sync			
T1IN19/TC5	23	VSYNC	V-Sync			
T1IN20/TC6	25	DE	Data Enable Signal			
T1CLK IN /CLKIN	26	NCLK	Data Sampling Clock	T1CLK OUT- T1CLK OUT+	No. 18 No. 19	ECLK - ECLK +

Note : Please connect NC pin to nothing. Don't connect it to ground nor to other signal input.

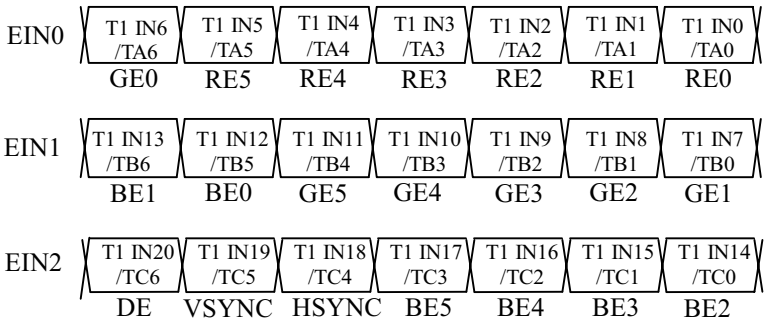

The information contained in this document is the exclusive property of HannStar Display Corporation. It shall not be disclosed, distributed or reproduced in whole or in part without written permission of HannStar Display Corporation.

Case2: ODD DATA(6bit transmitter)

THC63LVDM63A						
Input terminal no.		Input signal (Graphics controller output signal)		Output signal	HSD141PK11-A interface(CN1)	
Symbol	Terminal	Symbol	Function	Symbol	Terminal	Symbol
T2IN0/TA0	44	RO0	RED Pixels Display Data (LSB)	T2OUT0- T2OUT0+	No. 21 No. 22	OIN0- OIN0+
T2IN1/TA1	45	RO1	RED Pixels Display Data			
T2IN2/TA2	47	RO2	RED Pixels Display Data			
T2IN3/TA3	48	RO3	RED Pixels Display Data			
T2IN4/TA4	1	RO4	RED Pixels Display Data			
T2IN5/TA5	3	RO5	RED Pixels Display Data (MSB)			
T2IN6/TA6	4	GO0	GREEN Pixels Display Data (LSB)			
T2IN7/TB0	6	GO1	GREEN Pixels Display Data	T2OUT1- T2OUT1+	No. 24 No. 25	OIN1- OIN1+
T2IN8/TB1	7	GO2	GREEN Pixels Display Data			
T2IN9/TB2	9	GO3	GREEN Pixels Display Data			
T2IN10/TB3	10	GO4	GREEN Pixels Display Data			
T2IN11/TB4	12	GO5	GREEN Pixels Display Data (MSB)			
T2IN12/TB5	13	BO0	BLUE Pixels Display Data (LSB)			
T2IN13/TB6	15	BO1	BLUE Pixels Display Data			
T2IN14/TC0	16	BO2	BLUE Pixels Display Data	T2OUT2- T2OUT2+	No. 27 No. 28	OIN2- OIN2+
T2IN15/TC1	18	BO3	BLUE Pixels Display Data			
T2IN16/TC2	19	BO4	BLUE Pixels Display Data			
T2IN17/TC3	20	BO5	BLUE Pixels Display Data (MSB)			
T2IN18/TC4	22	NC	Non Connection(open)			
T2IN19/TC5	23	NC	Non Connection(open)			
T2IN20/TC6	25	NC	Non Connection(open)			
T1CLK IN /CLKIN	26	NCLK	Data Sampling Clock	T2CLK OUT- T2CLK OUT+	No. 30 No. 31	OCLK - OCLK+

Note : Please connect NC pin to nothing. Don't connect it to ground nor to other signal input.

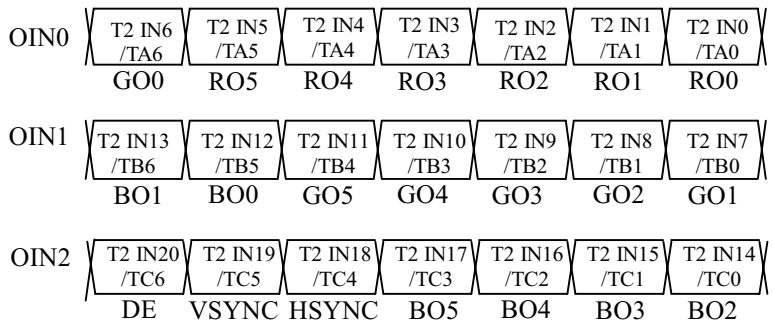

The information contained in this document is the exclusive property of HannStar Display Corporation. It shall not be disclosed, distributed or reproduced in whole or in part without written permission of HannStar Display Corporation.

Case1 : EVEN DATA (8bit transmitter)

THC63LVDM83A						
Input terminal no.		Input signal (Graphics control output signal)		Output signal	To HSD141PX11-A interface(CN1)	
Symbol	Terminal	Symbol	Function	Symbol	Terminal	Symbol
T1IN0/TA0	51	RE0	RED Pixels Display Data (LSB)	T1OUT0- T1OUT0+	No. 9 No. 10	EIN0- EIN0+
T1IN1/TA1	52	RE1	RED Pixels Display Data			
T1IN2/TA2	54	RE2	RED Pixels Display Data			
T1IN3/TA3	55	RE3	RED Pixels Display Data			
T1IN4/TA4	56	RE4	RED Pixels Display Data			
T1IN5/TA5	3	RE5	RED Pixels Display Data (MSB)			
T1IN6/TA6	4	GE0	GREEN Pixels Display Data (LSB)			
T1IN7/TB0	6	GE1	GREEN Pixels Display Data	T1OUT1- T1OUT1+	NO.12 NO.13	EIN1- EIN1+
T1IN8/TB1	7	GE2	GREEN Pixels Display Data			
T1IN9/TB2	11	GE3	GREEN Pixels Display Data			
T1IN10/TB3	12	GE4	GREEN Pixels Display Data			
T1IN11/TB4	14	GE5	GREEN Pixels Display Data (MSB)			
T1IN12/TB5	15	BE0	BLUE Pixels Display Data (LSB)			
T1IN13/TB6	19	BE1	BLUE Pixels Display Data			
T1IN14/TC0	20	BE2	BLUE Pixels Display Data	T1OUT2- T1OUT2+	NO.15 NO.16	EIN2- EIN2+
T1IN15/TC1	22	BE3	BLUE Pixels Display Data			
T1IN16/TC2	23	BE4	BLUE Pixels Display Data			
T1IN17/TC3	24	BE5	BLUE Pixels Display Data (MSB)			
T1IN18/TC4	27	HSYNC	H-Sync			
T1IN19/TC5	28	VSYNC	V-Sync			
T1IN20/TC6	30	DE	Data Enable Signal			
T1IN21/TD0	50	NC	Non Connection (open)	T1OUT3- T1OUT3+	NC NC	NC NC
T1IN22/TD1	2	NC	Non Connection (open)			
T1IN23/TD2	8	NC	Non Connection (open)			
T1IN24/TD3	10	NC	Non Connection (open)			
T1IN25/TD4	16	NC	Non Connection (open)			
T1IN26/TD5	18	NC	Non Connection (open)			
T1IN27/TD6	25	NC	Non Connection (open)			
T1CLK IN /CLKIN	31	NCLK	DATA SAMPLING CLOCK	T1CLK OUT- T1CLK OUT+	NO. 18 NO. 19	ECLK - ECLK +

Note : Please connect NC pin to nothing. Don't connect it to ground nor to other signal input.

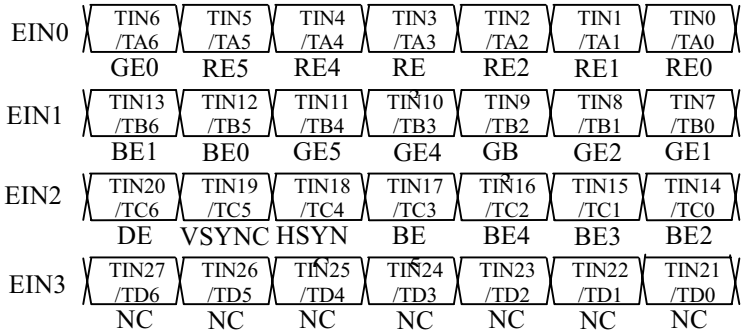

The information contained in this document is the exclusive property of HannStar Display Corporation. It shall not be disclosed, distributed or reproduced in whole or in part without written permission of HannStar Display Corporation.

Case2 : ODD DATA (8bit transmitter)

THC63LVDM83A						
Input terminal no.		Input signal (Graphics control output signal)		Output signal	To HSD141PX11-A interface(CN1)	
Symbol	Terminal	Symbol	Function	Symbol	Terminal	Symbol
T2IN0/TA0	51	RO0	RED Pixels Display Data (LSB)	T2OUT0- T2OUT0+	No. 21 No. 22	OIN0- OIN0+
T2IN1/TA1	52	RO1	RED Pixels Display Data			
T2IN2/TA2	54	RO2	RED Pixels Display Data			
T2IN3/TA3	55	RO3	RED Pixels Display Data			
T2IN4/TA4	56	RO4	RED Pixels Display Data			
T2IN5/TA5	3	RO5	RED Pixels Display Data (MSB)			
T2IN6/TA6	4	GO0	GREEN Pixels Display Data (LSB)			
T2IN7/TB0	6	GO1	GREEN Pixels Display Data	T2OUT1- T2OUT1+	NO.24 NO.25	OIN1- OIN1+
T2IN8/TB1	7	GO2	GREEN Pixels Display Data			
T2IN9/TB2	11	GO3	GREEN Pixels Display Data			
T2N10/TB3	12	GO4	GREEN Pixels Display Data			
T2IN11/TB4	14	GO5	GREEN Pixels Display Data (MSB)			
T2IN12/TB5	15	BO0	BLUE Pixels Display Data (LSB)			
T2IN13/TB6	19	BO1	BLUE Pixels Display Data			
T2IN14/TC0	20	BO2	BLUE Pixels Display Data	T2OUT2- T2OUT2+	NO.27 NO.28	OIN2- OIN2+
T2IN15/TC1	22	BO3	BLUE Pixels Display Data			
T2IN16/TC2	23	BO4	BLUE Pixels Display Data			
T2IN17/TC3	24	BO5	BLUE Pixels Display Data (MSB)			
T2IN18/TC4	27	NC	Non Connection (open)			
T2IN19/TC5	28	NC	Non Connection (open)			
T2IN20/TC6	30	NC	Non Connection (open)			
T2IN21/TD0	50	NC	Non Connection (open)	T2OUT3- T2OUT3+	NC NC	— —
T2IN22/TD1	2	NC	Non Connection (open)			
T2IN23/TD2	8	NC	Non Connection (open)			
T2IN24/TD3	10	NC	Non Connection (open)			
T2IN25/TD4	16	NC	Non Connection (open)			
T2IN26/TD5	18	NC	Non Connection (open)			
T2IN27/TD6	25	NC	Non Connection (open)			
T2CLK IN /CLKIN	31	NCLK	DATA SAMPLING CLOCK	T2CLK OUT- T2CLK OUT+	NO. 30 NO. 31	OCLK - OCLK +

Note : Please connect NC pin to nothing. Don't connect it to ground nor to other signal input.

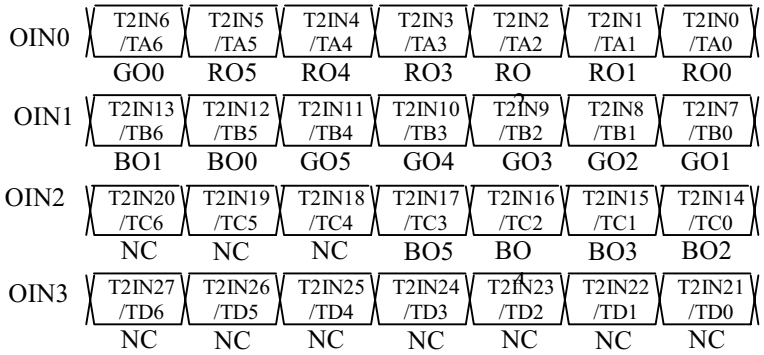

The information contained in this document is the exclusive property of HannStar Display Corporation. It shall not be disclosed, distributed or reproduced in whole or in part without written permission of HannStar Display Corporation.

7.0 INTERFACE TIMING 1)2)3)4)5)6)

7.1 Timing Parameters (Hsync, Vsync and DE mode)

Item	Symbol	Min.	Typ.	Max.	unit
Frame Period	t1	1060xt4	1066xt4	1066xt4	ms
		16.66	16.66	16.66	
Vertical Display Term	t2	1050xt4	1050xt4	1050xt4	ms
Vertical Blanking Term	t3	10xt4	16xt4	16xt4	us
1 Line Scanning Time	t4	802xt7	844xt7	844xt7	us
		—	15.63	—	
Horizontal Display Term	t5	700xt7	700xt7	700xt7	us
Horizontal Blanking Term	t6	102xt7	144xt7	144xt7	us
Clock Period	t7	18.519	18.519	19.597	ns
V-Sync Term	tv	1060xt4	1066xt4	1066xt4	ms
V-Sync Pulse Width	tvw	2xt4	—	—	—
V-Sync Set up Time	tvsu	8xt7	—	—	—
V-Sync Hold Time	tvhd	8xt7	—	—	—
Vertical Front Porch	tvfp	2xt4	—	—	—
Vertical Data Sync Period	tvds	8xt4	—	—	—
Horizontal Period	th	804xt7	844xt7	844xt7	us
H-Sync Pulse Width	thw	4xt7	—	—	—
Horizontal Front Porch	thfp	4xt7	—	—	—
Horizontal Data Sync Period	thds	t6-thfp	t6-thfp	t6-thfp	—
DE Pulse Width	twde	700xt7	700xt7	700xt7	—

t3 = tvfp + tvds t4 = th

Note 1) Refer to “2.4.3 Timing Chart” and LVDS(THC63LVDF84A) specifications by THine Electronic,Inc..

Note 2) If ENAB is fixed to “H” or “L” level for certain period while NCLK is supplied , the panel displays black with some flicker.

Note 3) If NCLK is fixed to “H” or “L” level for certain period while ENAB is supplied , the panel may be damaged.

Note 4) Please adjust LCD operating signal timing and FL driving frequency , to optimize the display quality. There is a possibility that flicker is observed by the interference of LCD operating signal timing and FL driving condition(especially driving frequency),even if the condition satisfies above timing specifications and recommended operating conditions shown in 3.

Note 5) Do not make t1,t2,t3 and tvds fluctuate. If t1,t2,t3 and tvds are fluctuate, the panel displays black.

Note 6) In case of using the long frame period, the deterioration of display quality, noise etc. may be occurred.

Note 7) NCLK count of each Horizontal Scanning Time should be always the same.
V-Blanking period should be “n” X “Horizontal scanning Time” (n : integer).
Frame period should be always the same.

The information contained in this document is the exclusive property of HannStar Display Corporation. It shall not be disclosed, distributed or reproduced in whole or in part without written permission of HannStar Display Corporation.

7.2 Timing Diagram of Interface Signal (Hsync, Vsync and DE mode)

7.2.1 Vertical Timing

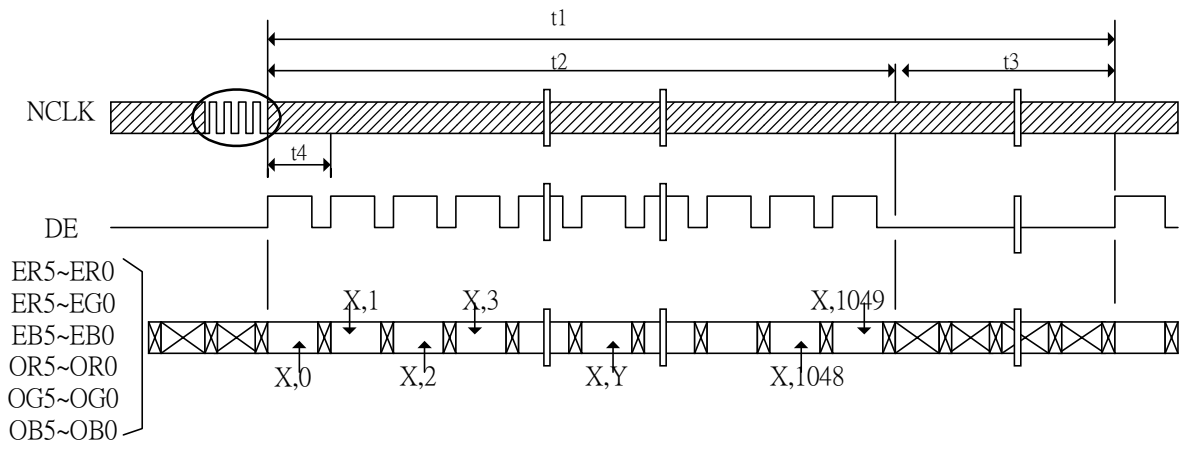

7.2.2 Horizontal Timing

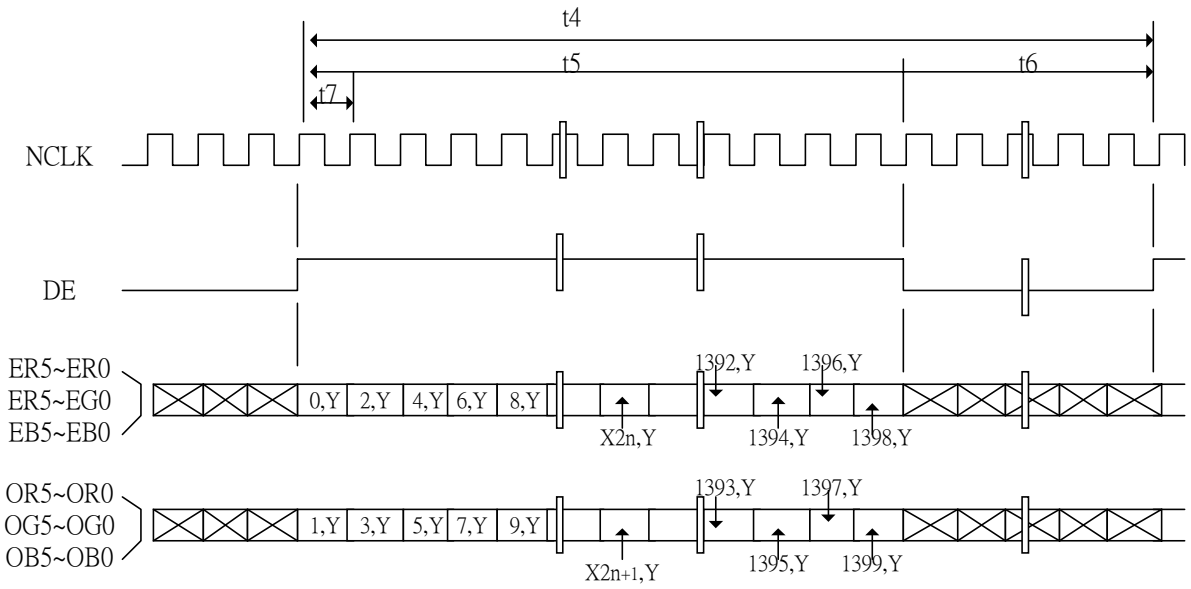

The information contained in this document is the exclusive property of HannStar Display Corporation. It shall not be disclosed, distributed or reproduced in whole or in part without written permission of HannStar Display Corporation.

7.2.3 SYNC Timing

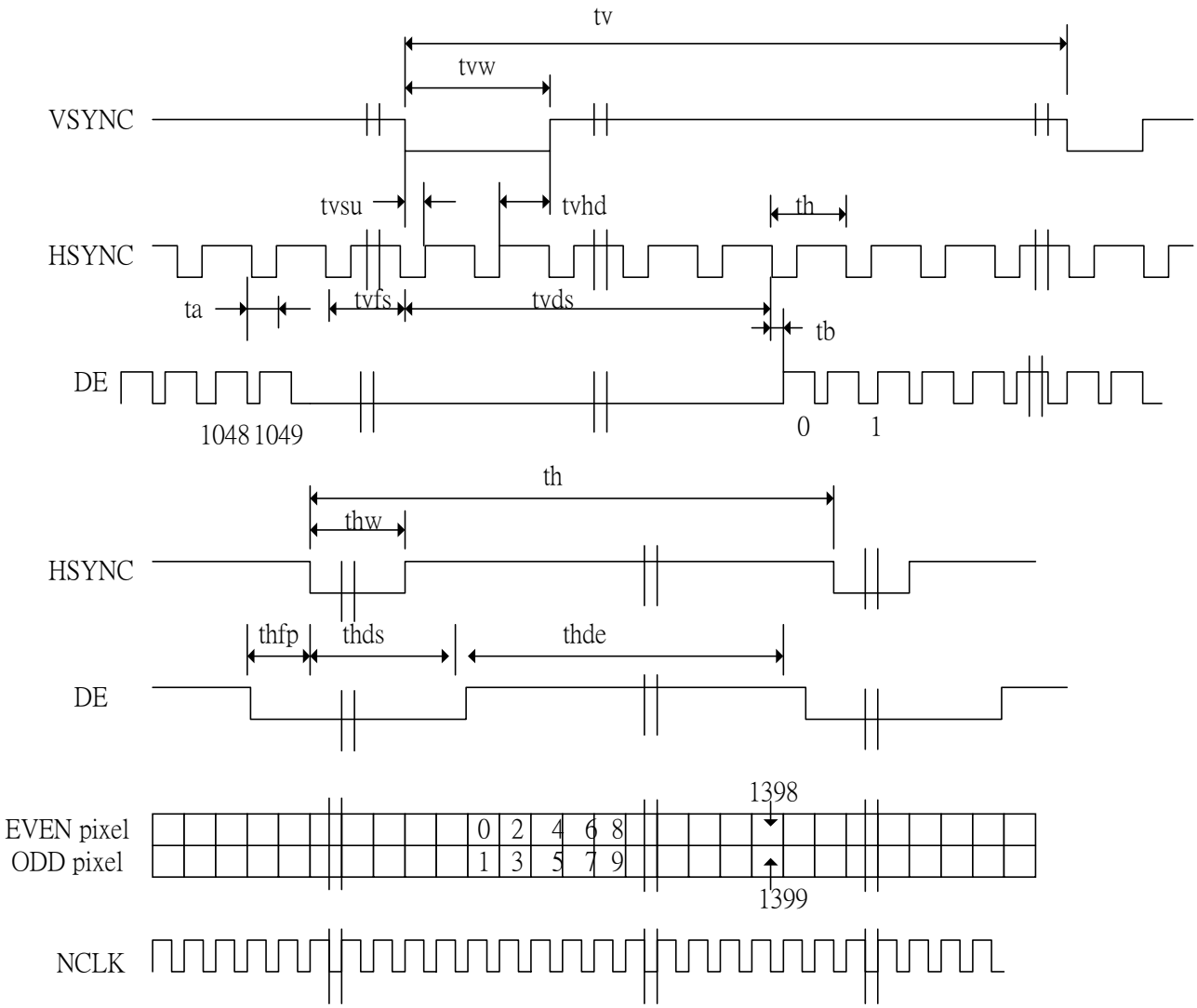

The information contained in this document is the exclusive property of HannStar Display Corporation. It shall not be disclosed, distributed or reproduced in whole or in part without written permission of HannStar Display Corporation.

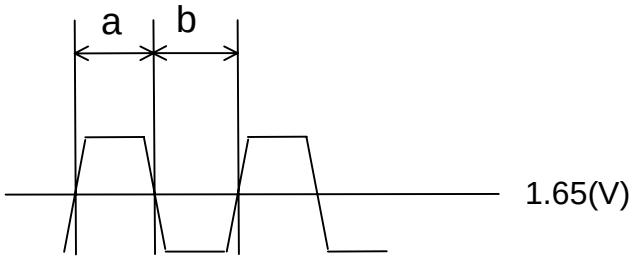

Duty(a,b)：50±10%

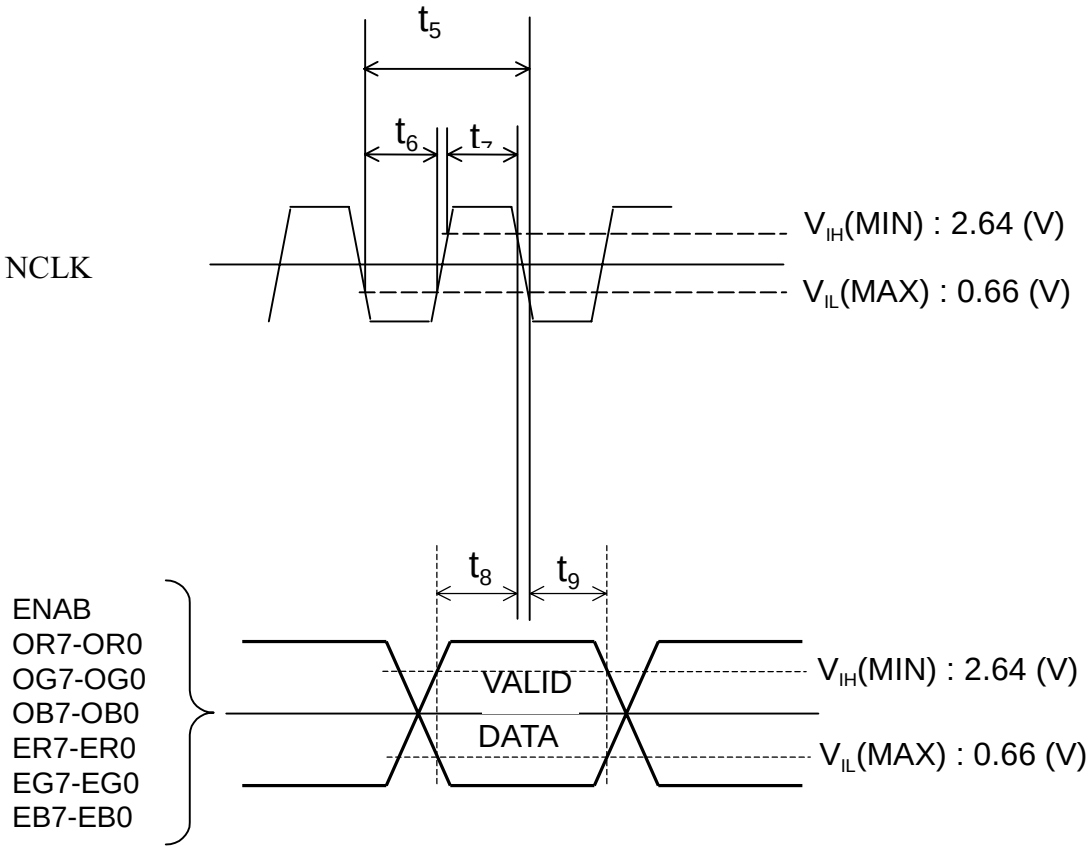

The information contained in this document is the exclusive property of HannStar Display Corporation. It shall not be disclosed, distributed or reproduced in whole or in part without written permission of HannStar Display Corporation.

7.3 Power ON/OFF Sequence

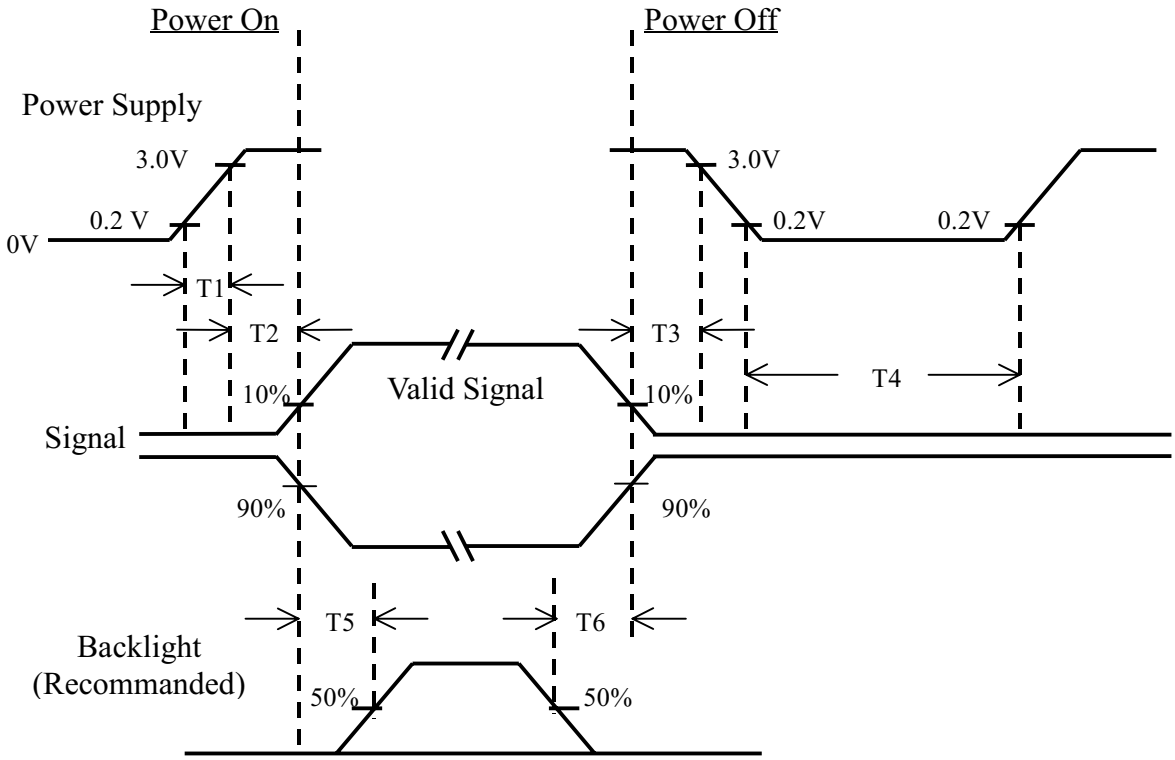

Power ON/OFF Sequence

Item	Min.	Typ.	Max.	Unit	Remark
T1	0	—	10	msec	
T2	0	—	50	msec	
T3	0	—	50	msec	
T4	400	—	—	sec	
T5	200	—	—	msec	
T6	200	—	—	msec	

Note (1) The supply voltage of the external system for the module input should be the same as the definition of V_{DD}.

(2) Apply the lamp volatge within the LCD operation range. When the back-light turns on before the LCD operation or the LCD truns off before the back-light turns off, the display may momentarily become white.

(3) In case of V_{DD} = off level, please keep the level of input signal on the low or keep a high impedance.

(4) T4 should be measured after the module has been fully discharged between power off and on period.

(5) Interface signal shall not be kept at high impedance when the power is on.

The information contained in this document is the exclusive property of HannStar Display Corporation. It shall not be disclosed, distributed or reproduced in whole or in part without written permission of HannStar Display Corporation.

8.0 OUTLINE DIMENSION

8.1 Front View Outline Dimension

Unit : mm

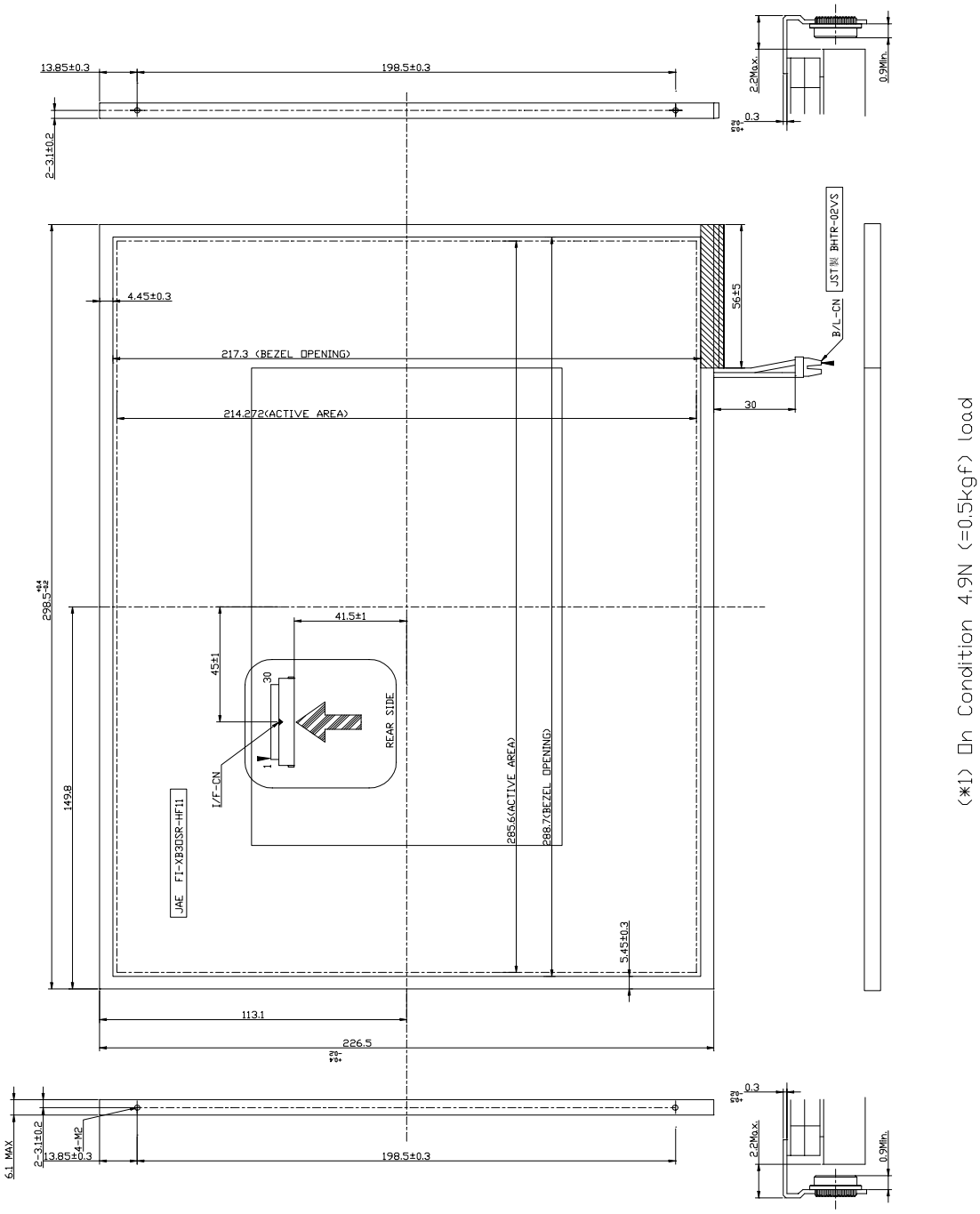

The information contained in this document is the exclusive property of HannStar Display Corporation. It shall not be disclosed, distributed or reproduced in whole or in part without written permission of HannStar Display Corporation.

8.2 Tolerance of distance between active area and bezel opening

$|a-b| \leqq 0.9mm$

$|c-d| \leqq 0.9mm$

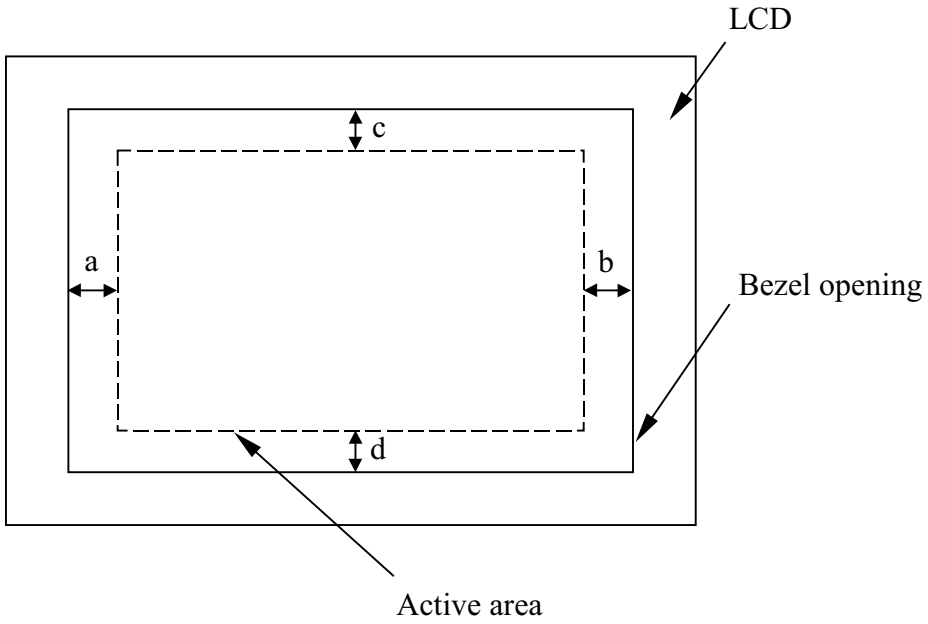

The information contained in this document is the exclusive property of HannStar Display Corporation. It shall not be disclosed, distributed or reproduced in whole or in part without written permission of HannStar Display Corporation.

9.0 LOT MARK

9.1 Lot Mark

1	2	3	4	5	6	7	8	9	10	11	12	13	14	15

code 1,2,3,4,5,6: HannStar internal flow control code.
code 7: production location.
code 8: production year.
code 9: production month.
code 10,11,12,13,14,15: serial number.

Note (1) Production Year

Year	1999	2000	2001	2002	2003	2004	2005	2006	2007	2008
Mark	9	0	1	2	3	4	5	6	7	8

Note (2) Production Month

Month	Jan.	Feb.	Mar.	Apr.	May.	Jun.	Jul.	Aug.	Sep.	Oct	Nov.	Dec.
Mark	1	2	3	4	5	6	7	8	9	A	B	C

9.2 Location of Lot Mark

(1) The label is attached to the backside of the LCD module.
(2) This is subject to change without prior notice.

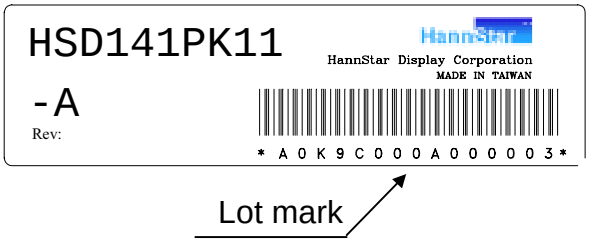

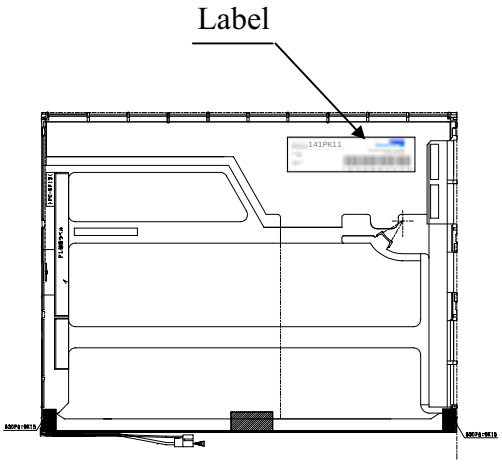

The information contained in this document is the exclusive property of HannStar Display Corporation. It shall not be disclosed, distributed or reproduced in whole or in part without written permission of HannStar Display Corporation.

10.0 GENERAL PRECAUTION

10.1 Use Restriction

This product is not authorized for use in life supporting systems, aircraft navigation control systems, military systems and any other application where performance failure could be life-threatening or otherwise catastrophic.

10.2 Disassembling or Modification

Do not disassemble or modify the module. It may damage sensitive parts inside LCD module, and may cause scratches or dust on the display. HannStar does not warrant the module, if customers disassemble or modify the module.

10.3 Breakage of LCD Panel

10.3.1 If LCD panel is broken and liquid crystal spills out, do not ingest or inhale liquid crystal, and do not contact liquid crystal with skin.

10.3.2 If liquid crystal contacts mouth or eyes, rinse out with water immediately.

10.3.3 If liquid crystal contacts skin or cloths, wash it off immediately with alcohol and rinse thoroughly with water.

10.3.4 Handle carefully with chips of glass that may cause injury, when the glass is broken.

10.4 Electric Shock

10.4.1 Disconnect power supply before handling LCD module.

10.4.2 Do not pull or fold the CCFL cable.

10.4.3 Do not touch the parts inside LCD modules and the fluorescent lamp's connector or cables in order to prevent electric shock.

10.5 Absolute Maximum Ratings and Power Protection Circuit

10.5.1 Do not exceed the absolute maximum rating values, such as the supply voltage variation, input voltage variation, variation in parts' parameters, environmental temperature, etc., otherwise LCD module may be damaged.

10.5.2 Please do not leave LCD module in the environment of high humidity and high temperature for a long time.

10.5.3 It's recommended to employ protection circuit for power supply.

10.6 Operation

10.6.1 Do not touch, push or rub the polarizer with anything harder than HB pencil lead.

10.6.2 Use fingerstalls of soft gloves in order to keep clean display quality, when persons handle the LCD module for incoming inspection or assembly.

10.6.3 When the surface is dusty, please wipe gently with absorbent cotton or other soft material.

The information contained in this document is the exclusive property of HannStar Display Corporation. It shall not be disclosed, distributed or reproduced in whole or in part without written permission of HannStar Display Corporation.

10.6.4 Wipe off saliva or water drops as soon as possible. If saliva or water drops contact with polarizer for a long time, they may causes deformation or color fading.

10.6.5 When cleaning the adhesives, please use absorbent cotton wetted with a little petroleum benzine or other adequate solvent.

10.7 Mechanism

Please mount LCD module by using mouting holes arranged in four corners tightly.

10.8 Static Electricity

10.8.1 Protection film must remove very slowly from the surface of LCD module to prevent from electrostatic occurrence.

10.8.2 Because LCD module use CMOS-IC on circuit board and TFT-LCD panel, it is very weak to electrostatic discharge. Please be careful with electrostatic discharge. Persons who handle the module should be grounded through adequate methods.

10.9 Strong Light Exposure

The module shall not be exposed under strong light such as direct sunlight. Otherwise, display characteristics may be changed.

10.10 Disposal

When disposing LCD module, obey the local environmental regulations.

The information contained in this document is the exclusive property of HannStar Display Corporation. It shall not be disclosed, distributed or reproduced in whole or in part without written permission of HannStar Display Corporation.

11.0 VISUAL INSPECTION SPECIFICATION

Inspection condition is as followings

- Viewing distance is approximately 15-50 cm
- Viewing angle is normal to the LCD panel
- Ambient temperature is in the room temperature
- Ambient illumination is 300~500 Lux

	Defect type	Criteria
Visual defect	Dark/ Bright Spot Circular Foreign Material	0.2 mm ≦ D ≦ 0.5 mm N ≦ 4
D: diameter N: number W: horizontal width L: vertical high	Bright or Dark Line Foreign Material	0.03 mm ≦ W ≦ 0.07 mm 0.3 mm ≦ L ≦ 2 mm N ≦ 4
	Polarizer/ Linear Scratch	0.01 mm ≦ W ≦ 0.1mm 0.3 mm ≦ L ≦ 5 mm N ≦ 3
	Polarizer- Bubble/ Peeling	Average D ≦ 0.35 mm N ≦ 4
	Maximum Allowable Defect Count All Types	N ≦ 7
Electrical defect	Bright Dot Random	N ≦ 5
	Bright Dot – Green	N ≦ 2
	Bright Dot- 2 Adjacent	N ≦ 1
N: number	Dark Dots- Random	N ≦ 5
	Dark Dots- 2 Adjacent	N ≦ 2
	Dark Dots- 3 or More Adjacent	N = 0
	Total Bright and Dark Dots	N ≦ 8
	Minimum Distance Between Bright Dots	15 mm
	Minimum Distance Between Dark Dots	5 mm
	Minimum Distance Between Bright Dots and Dark Dots	10 mm

The information contained in this document is the exclusive property of HannStar Display Corporation. It shall not be disclosed, distributed or reproduced in whole or in part without written permission of HannStar Display Corporation.

Note(1)Bright dot defect description

-Two adjacent

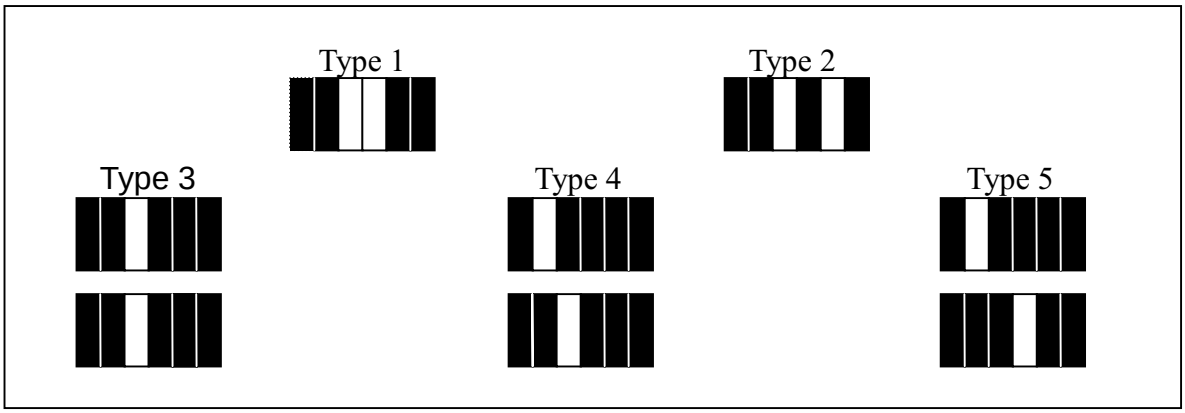

Note(2)Dark dot defect description

-Two adjacent

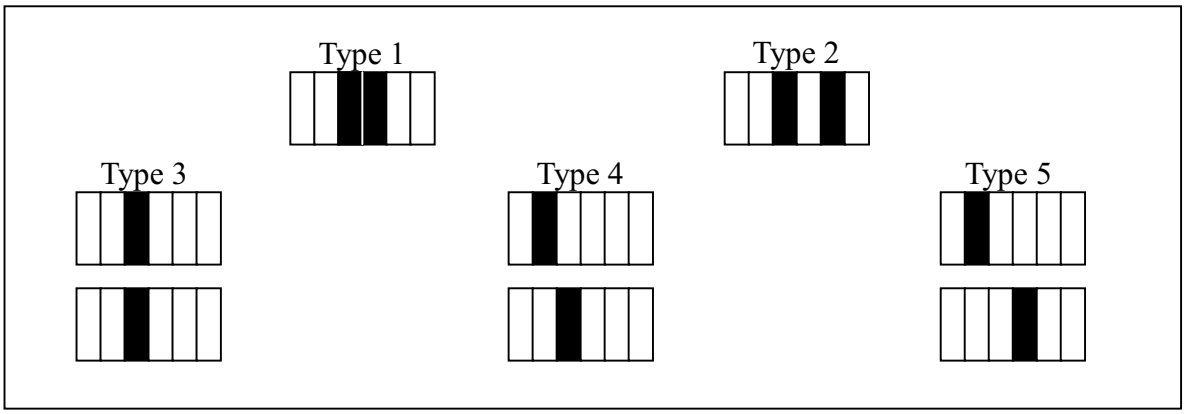

Note(3)Dark dot defect description

-Three adjacent

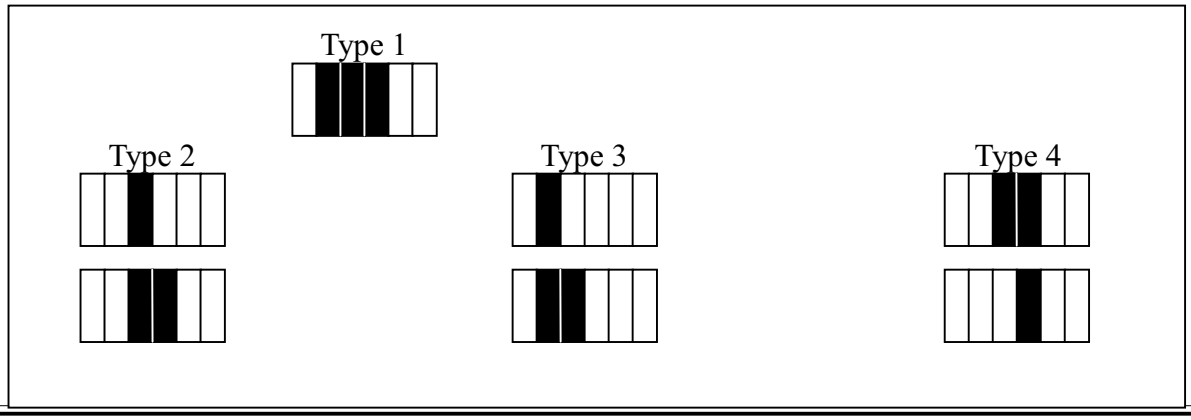

The information contained in this document is the exclusive property of HannStar Display Corporation. It shall not be disclosed, distributed or reproduced in whole or in part without written permission of HannStar Display Corporation.

Note (4) Minimum distance between dot defects

Bright dot to bright dot

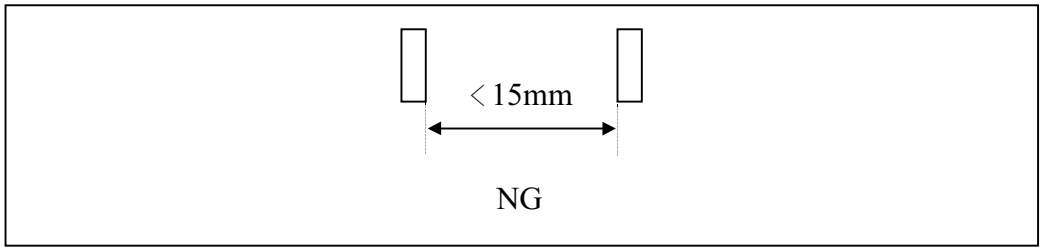

Dark dot to dark dot

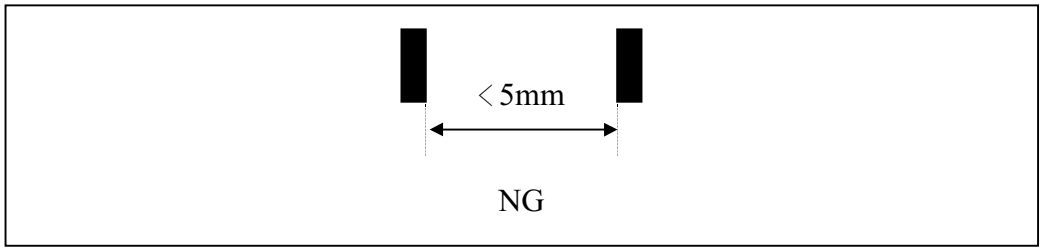

Note (5) “Average Diameter” description

Dusts would be judged by “Average Diameter” under vertical high ≧0.1 mm and horizontal width ≦0.1mm condition..

Average Diameter ＝ (a+b)/2

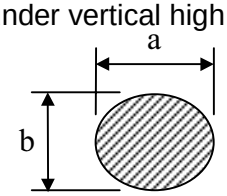

The information contained in this document is the exclusive property of HannStar Display Corporation. It shall not be disclosed, distributed or reproduced in whole or in part without written permission of HannStar Display Corporation.