Linear Charger OTP MCU

HT45R2140

Revision: V1.00 Date: July 11, 2025

www.holtek.com

Features

CPU Features

- Operating voltage
  - f_{SYS}=8MHz: 2.5V~4.2V
  - f_{SYS}=12MHz: 2.7V~4.2V
  - f_{SYS}=16MHz: 3.3V~4.2V
- Up to 0.25μs instruction cycle with 16MHz system clock at V_{DD}=4.2V
- Power down and wake-up functions to reduce power consumption
- Oscillator types
  - Internal High Speed 8/12/16MHz RC – HIRC
  - Internal Low Speed 32kHz RC – LIRC
- Multi-mode operation: FAST, SLOW, IDLE and SLEEP
- Fully integrated internal oscillators require no external components
- All instructions executed in 1~3 instruction cycles
- Table read instructions
- 115 powerful instructions
- 8-level subroutine nesting
- Bit manipulation instruction

Peripheral Features

- OTP Program Memory: 4K×16
- Data Memory: 256×8
- OTP ROM Parameter Program function – ORPP
- Watchdog Timer function
- 11 bidirectional I/O lines
- One external interrupt line shared with I/O pin
- Two Timer Modules for time measurement, capture input, compare match output, PWM output function or single pulse output function
- Pulse Width Modulator function
- 5 external channel 12-bit resolution A/D converter with Internal Reference Voltage V_{BG}
- Dual Time Base functions for generation of fixed time interrupt signals
- Low voltage reset function
- Low voltage detect function
- Input voltage detect function
  - Input maximum rating 20V
  - Over voltage protection
  - Under voltage lockout
- Linear charger
  - Charging current up to 1A programmed through R_{SET} when V_{IN}=5V
  - Charger status indication

- ±10% charging current regulation in constant current mode
- ±1% output voltage regulation in constant voltage mode @ 0°C to 85°C
- Constant temperature regulation
- Battery reverse current blocking when VIN input is invalid

- 2.0V±1% reference voltage output
- Package type: 16-pin NSOP

General Description

This device is an OTP type 8-bit high performance RISC architecture microcontroller, designed for cost-effective product applications.

For memory features, the device is supplied with One-Time Programmable, OTP memory. Other memory includes an area of RAM Data Memory.

Analog features include a multi-channel 12-bit A/D converter function. With regard to internal timers, the device includes multiple and extremely flexible Timer Modules providing functions for timing, pulse generation and PWM generation operations. Protective features such as an internal Watchdog Timer, Low Voltage Reset and Low Voltage Detector coupled with excellent noise immunity and ESD protection ensure that reliable operation is maintained in hostile electrical environments.

A full choice of internal high and low speed oscillators are provided and the two fully integrated system oscillators require no external components for their implementation. The ability to operate and switch dynamically between a range of operating modes using different clock sources gives users the ability to optimize microcontroller operation and minimize power consumption.

The device includes the functions of input over/under voltage protection, linear charger, charger status indication, reference voltage output, etc. It supports a maximum input rating of up to 20V to overcome unexpected high voltage from the USB input. The linear charger provides an up to 1A charging current for the Li-ion battery. The reference voltage function is used by the MCU for measuring battery voltage and current. The device uses a two-line communication interface to select different function, such as to control the linear charger and reference voltage function, or to read the charging status and control the CHRG pin by using the FN signal.

The inclusion of flexible I/O programming features, Time-Base functions along with many other features further enhance device functionality and flexibility. The device also includes a 16-bit PWM control circuit, which is used to generate a PWM output signal and an adjustable PWM duty. The device is especially suitable for electric toothbrushes, electric shavers and UV LEDs and so on.

Block Diagram

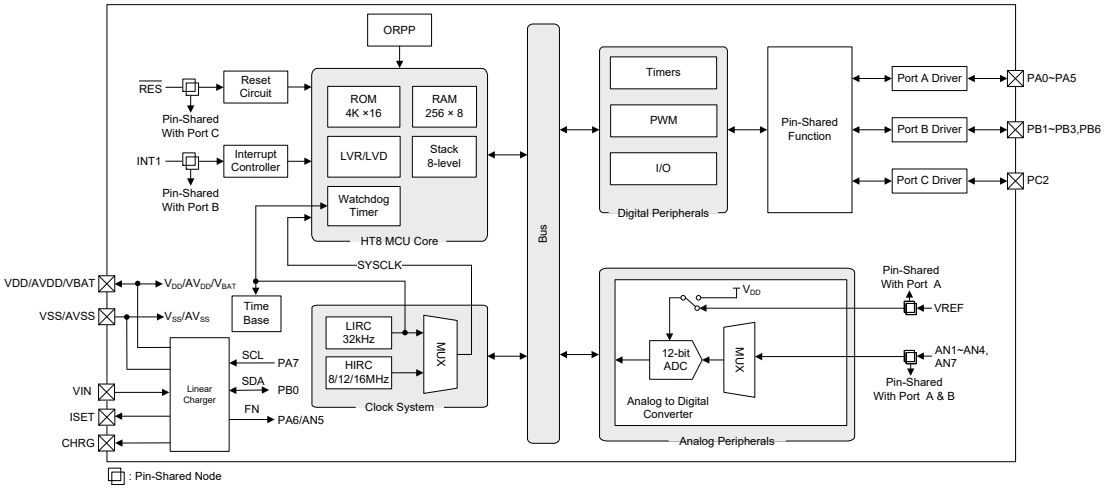

Pin Assignment

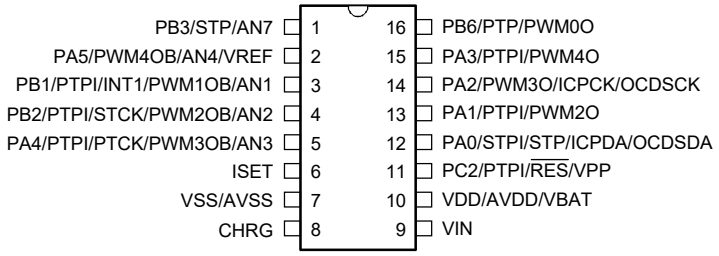

HT45R2140/HT45EV2140
16 NSOP-A

Note: 1. If the pin-shared pin functions have multiple outputs, the desired pin-shared function is determined by the corresponding software control bits.

2. The OCDSDA and OCDSCK pins are supplied for the OCDS dedicated pins and as such only available for the HT45EV2140 device (Flash type) which is the OCDS EV chip for the HT45R2140 device (OTP type).

3. There are some unbonded pins which should be properly configured to avoid unwanted current consumption resulting from floating input conditions. Refer to the “Standby Current Considerations” and “Input/Output Ports” sections.

4. The VPP pin is the High Voltage input for OTP programming and only available for the HT45R2140 device.

Pin Description

The function of each pin is listed in the following table, however the details behind how each pin is configured is contained in other sections of the datasheet.

Pin Name	Function	OPT	I/T	O/T	Description
PA0/STPI/STP/ICPDA/OCDSDA	PA0	PAPU PAWU PAS0	ST	CMOS	General purpose I/O. Register enabled pull-up and wake-up
	STPI	PAS0 IFS	ST	—	STM capture input
	STP	PAS0	—	CMOS	STM output
	ICPDA	—	ST	CMOS	ICP Data/Address pin
	OCDSDA	—	ST	CMOS	OCDS Address/Data pin, for EV chip only
PA1/PTPI/PWM2O	PA1	PAPU PAWU PAS0	ST	CMOS	General purpose I/O. Register enabled pull-up and wake-up
	PTPI	PAS0 IFS	ST	—	PTM capture input
	PWM2O	PAS0	—	CMOS	PWM2 signal output
PA2/PWM3O/ICPCK/OCDSCK	PA2	PAPU PAWU PAS0	ST	CMOS	General purpose I/O. Register enabled pull-up and wake-up
	PWM3O	PAS0	—	CMOS	PWM3 signal output
	ICPCK	—	ST	—	ICP clock pin
	OCDSCK	—	ST	—	OCDS clock pin, for EV chip only
PA3/PTPI/PWM4O	PA3	PAPU PAWU PAS0	ST	CMOS	General purpose I/O. Register enabled pull-up and wake-up
	PTPI	PAS0 IFS	ST	—	PTM capture input
	PWM4O	PAS0	—	CMOS	PWM4 signal output
PA4/PTPI/PTCK/PWM3OB/AN3	PA4	PAPU PAWU PAS1	ST	CMOS	General purpose I/O. Register enabled pull-up and wake-up
	PTPI	PAS1 IFS	ST	—	PTM capture input
	PTCK	PAS1 IFS	ST	—	PTM clock input
	PWM3OB	PAS1	—	CMOS	PWM3 signal inverter output
	AN3	PAS1	AN	—	A/D Converter external input channel
PA5/PWM4OB/AN4/VREF	PA5	PAPU PAWU PAS1	ST	CMOS	General purpose I/O. Register enabled pull-up and wake-up
	PWM4OB	PAS1	—	CMOS	PWM4 signal inverter output
	AN4	PAS1	AN	—	A/D Converter external input channel
	VREF	PAS1	AN	—	A/D Converter external reference voltage input

Pin Name	Function	OPT	I/T	O/T	Description
PB1/PTPI/INT1/PWM1OB/AN1	PB1	PBPU PBS0	ST	CMOS	General purpose I/O. Register enabled pull-up
	PTPI	PBS0 IFS	ST	—	PTM capture input
	INT1	INTEG INTC1 PBS0 IFS	ST	—	External interrupt input 1
	PWM1OB	PBS0	—	CMOS	PWM1 signal inverter output
	AN1	PBS0	AN	—	A/D Converter external input channel
PB2/PTPI/STCK/PWM2OB/AN2	PB2	PBPU PBS0	ST	CMOS	General purpose I/O. Register enabled pull-up
	PTPI	PBS0 IFS	ST	—	PTM capture input
	STCK	PBS0 IFS	ST	—	STM clock input
	PWM2OB	PBS0	—	CMOS	PWM2 signal inverter output
	AN2	PBS0	AN	—	A/D Converter external input channel
PB3/STP/AN7	PB3	PBPU PBS0	ST	CMOS	General purpose I/O. Register enabled pull-up
	STP	PBS0	—	CMOS	STM output
	AN7	PBS0	AN	—	A/D Converter external input channel
PB6/PTP/PWM0O	PB6	PBPU PBS1	ST	CMOS	General purpose I/O. Register enabled pull-up
	PTP	PBS1	—	CMOS	PTM output
	PWM0O	PBS1	—	CMOS	PWM0 signal output
PC2/PTPI/$\overline{\text{RES}}$/VPP	PC2	PCPU	ST	CMOS	General purpose I/O. Register enabled pull-up. This I/O is pin-shared with VPP and could result in increased current consumption if it is set to output high.
	PTPI	IFS	ST	—	PTM capture input
	$\overline{\text{RES}}$	CO RSTC	ST	—	External reset input
	VPP	—	PWR	—	High Voltage input for OTP programming, not available for EV chip
ISET	ISET	—	—	AN	Charging current setting
CHRG	CHRG	—	—	OD	Open-drain output, refer to the “Linear Charger” and “Interface” sections
VIN	VIN	—	PWR	—	Input power
VDD/AVDD/VBAT	VDD	—	PWR	—	Digital positive power supply
	AVDD	—	PWR	—	A/D Converter power supply
	VBAT	—	—	AN	Battery power
VSS/AVSS	VSS	—	PWR	—	Digital negative power supply, ground
	AVSS	—	PWR	—	A/D Converter negative power supply, ground

Legend: I/T: Input type; O/T: Output type;
OPT: Optional by configuration option (CO) or register option;
CO: Configuration option; PWR: Power;
ST: Schmitt Trigger input; CMOS: CMOS output;
OD: Open drain; AN: Analog signal.

Internally Connected Signal

Several signals listed in the following table are not connected to external package pins. These signals are interconnection lines between the MCU and the linear charger. Users should properly configure the PA6/AN5, PA7 and PB0 to implement correct interconnection.

MCU Signal Name	Linear Charger Signal Name	Function	Description
PA7	SCL	PA7	General purpose I/O Internally connected to the Linear Charger SCL
		SCL	Two-line communication clock line Internally connected to the MCU PA7
PB0	SDA	PB0	General purpose I/O Internally connected to the Linear Charger SDA
		SDA	Two-line communication data line Internally connected to the MCU PB0
PA6/AN5	FN	PA6	General purpose I/O Internally connected to the Linear Charger FN
		AN5	A/D Converter external input channel 5 Internally connected to the Linear Charger FN
		FN	Different status and functions based on two-line communication setting, refer to the “Interface” section Internally connected to the MCU PA6/AN5

Absolute Maximum Ratings

Supply Voltage ..... V_{SS}-0.3V to 6.0V

Input Voltage ..... V_{SS}-0.3V to V_{DD}+0.3V

VIN, CHRG ..... -0.3V to 20V

VBAT, ISET ..... -0.3V to 7.0V

Maximum Junction Temperature ..... 160°C

Lead Temperature (Soldering 10sec) ..... 260°C

Storage Temperature ..... -60°C to 150°C

Operating Temperature ..... -40°C to 85°C

I_{OH} Total ..... -80mA

I_{OL} Total 80mA

Total Power Dissipation 500mW

Note: These are stress ratings only. Stresses exceeding the range specified under “Absolute Maximum Ratings” may cause substantial damage to the device. Functional operation of the device at other conditions beyond those listed in the specification is not implied and prolonged exposure to extreme conditions may affect device reliability.

Recommended Operating Ranges

VIN, CHRG ..... 4.5V to 7.0V

VBAT ..... 2.5V to 4.2V

I_{BAT} (max.) @ V_{IN}=5V 1A

Ta ..... -40°C to 85°C

Note: Absolute Maximum Ratings indicate limitations beyond which damage to the device may occur. Recommended Operating Ranges indicate conditions for which the device is intended to be functional, but do not guarantee specified performance limits.

D.C. Characteristics

For data in the following tables, note that factors such as oscillator type, operating voltage, operating frequency, pin load conditions, temperature and program instruction type, etc., can all exert an influence on the measured values.

Operating Voltage Characteristics

Ta=-40°C~85°C

Symbol	Parameter	Test Conditions	Min.	Typ.	Max.	Unit
V_{DD}	Operating Voltage – HIRC	f_{SYS}=8MHz	2.5	—	4.2	V
		f_{SYS}=12MHz	2.7	—	4.2	
		f_{SYS}=16MHz	3.3	—	4.2	
	Operating Voltage – LIRC	f_{SYS}=32kHz	2.5	—	4.2	V

Standby Current Characteristics

Ta=25°C, unless otherwise specified

Symbol	Standby Mode	Test Conditions		Min.	Typ.	Max.	Max. @85°C	Unit
		V_{DD}	Conditions					
I_{STB}	SLEEP Mode	3V	WDT off	—	0.45	0.90	2.60	μA
		4.2V		—	0.5	2.0	5.0	
		3V	WDT on	—	1.5	3.0	3.6	μA
		4.2V		—	3	5	6	
	IDLE0 Mode – LIRC	3V	f_{SUB} on	—	3	5	6	μA
		4.2V		—	5	10	12	
	IDLE1 Mode – HIRC	3V	f_{SUB} on, f_{SYS}=8MHz	—	360	500	600	μA
		4.2V		—	600	800	960	
		2.7V	f_{SUB} on, f_{SYS}=12MHz	—	432	600	720	μA
		3V		—	540	750	900	
		4.2V		—	800	1200	1440	
		3.3V	f_{SUB} on, f_{SYS}=16MHz	—	0.80	1.20	1.44	mA
		4.2V		—	1.4	2.0	2.4	

Note: When using the characteristic table data, the following notes should be taken into consideration:

1. Any digital inputs are set in a non-floating condition and the I/O pin-shared with VPP is not setup in an output high condition.
2. All measurements are taken under conditions of no load and with all peripherals in an off state.
3. There are no DC current paths.
4. All Standby Current values are taken after a HALT instruction execution thus stopping all instruction execution.

Operating Current Characteristics

Ta=-40°C~85°C

Symbol	Operating Mode	Test Conditions		Min.	Typ.	Max.	Unit
		V_{DD}	Conditions				
I_{DD}	SLOW Mode – LIRC	3V	f_{SYS}=32kHz	—	10	20	μA
		4.2V		—	30	50	
	FAST Mode – HIRC	3V	f_{SYS}=8MHz	—	0.8	1.2	mA
		4.2V		—	1.6	2.4	
		2.7V	f_{SYS}=12MHz	—	1.0	1.4	mA
		3V		—	1.2	1.8	
		4.2V		—	2.4	3.6	
		3.3V	f_{SYS}=16MHz	—	1.5	3.0	mA
		4.2V		—	2.5	5.0	

Note: When using the characteristic table data, the following notes should be taken into consideration:

1. Any digital inputs are set in a non-floating condition and the I/O pin-shared with VPP is not setup in an output high condition.
2. All measurements are taken under conditions of no load and with all peripherals in an off state.
3. There are no DC current paths.
4. All Operating Current values are measured using a continuous NOP instruction program loop.

A.C. Characteristics

For data in the following tables, note that factors such as oscillator type, operating voltage, operating frequency and temperature, etc., can all exert an influence on the measured values.

High Speed Internal Oscillator – HIRC – Frequency Accuracy

During the program writing operation the writer will trim the HIRC oscillator at a user selected HIRC frequency and user selected voltage of either 3V or 5V.

Symbol	Parameter	Test Conditions		Min	Typ	Max	Unit
		V_{DD}	Temp.				
f_{HIRC}	8MHz Writer Trimmed HIRC Frequency	3V	25°C	-1%	8	+1%	MHz
			-20°C~60°C	-3%	8	+3%	
			-40°C~85°C	-4.5%	8	+4.5%	
		2.5V~4.2V	25°C	-3.5%	8	+3. 5%	
			-20°C~60°C	-4.5%	8	+4.5%	
			-40°C~85°C	-5%	8	+5%	
	12MHz Writer Trimmed HIRC Frequency	3V	25°C	-1%	12	+1%	MHz
			-20°C~60°C	-1.5%	12	+1.1%	
			-40°C~85°C	-2%	12	+2%	
		2.7V~4.2V	25°C	-2.5%	12	+2.5%	
			-20°C~60°C	-2.8%	12	+2.8%	
			-40°C~85°C	-3%	12	+3%	
	16MHz Writer Trimmed HIRC Frequency	3.3V~4.2V	25°C	-2.5%	16	+2.5%	MHz
			-20°C~60°C	-2.8%	16	+2.8%	
			-40°C~85°C	-3%	16	+3%	

Note: 1. There are 3V/5V two selectable fixed voltages at which the HIRC frequency is trimmed by the writer, here the 3V values for V_{DD} are provided.

2. The row below the 3V trim voltage row is provided to show the values for the full V_{DD} range operating

voltage. It is recommended that the trim voltage is fixed at 3V for application voltage ranges from 2.5V to 3.6V and fixed at 5V for application voltage ranges from 3.3V to 4.2V.

3. The minimum and maximum tolerance values provided in the table are for the frequency at which the writer trims the HIRC oscillator. After trimming at this chosen specific frequency any change in HIRC oscillator frequency using the oscillator register control bits by the application program will give a frequency tolerance to within ±20%.

Low Speed Internal Oscillator – LIRC – Frequency Accuracy

Symbol	Parameter	Test Conditions		Min.	Typ.	Max.	Unit
		V_{DD}	Temp.				
f_{LIRC}	LIRC Frequency	2.5V~4.2V	25°C	-20%	32	+20%	kHz
			-40°C~85°C	-50%	32	+60%	
t_{START}	LIRC Start Up Time	—	-40°C~85°C	—	—	500	μs

Operating Frequency Characteristic Curves

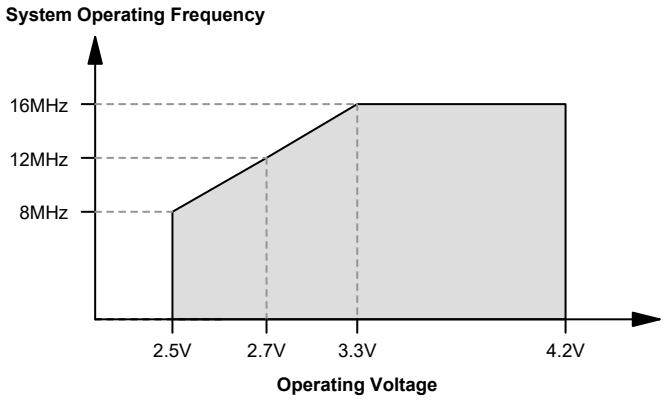

System Start Up Time Characteristics

Ta=-40°C~85°C

Symbol	Parameter	Test Conditions		Min.	Typ.	Max.	Unit
		V_{DD}	Conditions				
t_{SST}	System Start-up Time (Wake-up from Condition Where f_{SYS} is Off)	—	$f_{SYS}=f_H$~$f_H/64$, $f_H=f_{HIRC}$	—	16	—	t_{HIRC}
			$f_{SYS}=f_{SUB}=f_{LIRC}$	—	2	—	t_{LIRC}
	System Start-up Time (Wake-up from Condition Where f_{SYS} is On)		$f_{SYS}=f_H$~$f_H/64$, $f_H=f_{HIRC}$	—	2	—	t_H
			$f_{SYS}=f_{SUB}=f_{LIRC}$	—	2	—	t_{SUB}
	System Speed Switch Time (FAST to SLOW Mode or SLOW to FAST Mode)		f_{HIRC} switches from off to on	—	16	—	t_{HIRC}
t_{RSTD}	System Reset Delay Time (Reset Source from Power-on Reset or LVR Hardware Reset)	—	RR_{POR}=4.2V/ms	10	16	24	ms
	System Reset Delay Time (LVRC/WDTC/RSTC Software Reset)		—				
	System Reset Delay Time (Reset Source from WDT Overflow or $\overline{RES}$ Pin Reset)		—				
t_{SRESET}	Minimum Software Reset Width to Reset	—	—	45	90	120	μs

Note: 1. For the System Start-up time values, whether f_{SYS} is on or off depends upon the mode type and the chosen f_{SYS} system oscillator. Details are provided in the System Operating Modes section.

2. The time units, shown by the symbols, t_{HIRC}, etc., are the inverse of the corresponding frequency values as provided in the frequency tables. For example $t_{HIRC}=1/f_{HIRC}$, $t_{LIRC}=1/f_{LIRC}$, etc.

3. If the LIRC is used as the system clock and if it is off when in the SLEEP Mode, then an additional LIRC

start up time, t_{START}, as provided in the LIRC frequency table, must be added to the t_{SST} time in the table above.

4. The System Speed Switch Time is effectively the time taken for the newly activated oscillator to start up.

Input/Output Characteristics

Ta=-40°C~85°C, unless otherwise specified

Symbol	Parameter	Test Conditions		Min.	Typ.	Max.	Unit
		V_{DD}	Conditions				
V_{IL}	Input Low Voltage for I/O Ports	4.2V	—	0	—	1.5	V
		—	—	0	—	$0.2V_{DD}$	
	Input Low Voltage for $\overline{RES}$ Pin	—	V_{DD}≥2.7V	0	—	$0.4V_{DD}$	V
			2.5V≤V_{DD}<2.7V	0	—	$0.3V_{DD}$	
V_{IH}	Input High Voltage for I/O Ports	4.2V	—	3.5	—	5	V
		—	—	$0.8V_{DD}$	—	V_{DD}	
	Input High Voltage for $\overline{RES}$ Pin	—	—	$0.9V_{DD}$	—	V_{DD}	V
I_{OL}	Sink Current for I/O Ports	3V	V_{OL}=0.1V_{DD}	5	10	—	mA
		4.2V		10	20	—	
I_{OH}	Source Current for I/O Ports	3V	V_{OH}=0.9V_{DD}, SLEDCn[m+1:m]=00B (n=0, 1, m=0, 2, 4, 6)	-0.5	-1.0	—	mA
		4.2V		-1.0	-1.8	—	
		3V	V_{OH}=0.9V_{DD}, SLEDCn[m+1:m]=01B (n=0, 1, m=0, 2, 4, 6)	-0.9	-1.7	—	mA
		4.2V		-1.7	-3.2	—	
		3V	V_{OH}=0.9V_{DD}, SLEDCn[m+1:m]=10B (n=0, 1, m=0, 2, 4, 6)	-1.2	-2.3	—	mA
		4.2V		-2.3	-4.6	—	
		3V	V_{OH}=0.9V_{DD}, SLEDCn[m+1:m]=11B (n=0, 1, m=0, 2, 4, 6)	-2.5	-5.0	—	mA
		4.2V		-5	-10	—	
R_{PH}	Pull-high Resistance for I/O Ports (Note)	3V	—	20	60	100	kΩ
		4.2V		10	30	50	
I_{LEAK}	Input Leakage Current for I/O Ports	4.2V	V_{IN}=V_{DD} or V_{IN}=V_{SS}	—	—	±1	μA
t_{TCK}	xTM xTCK Input Pin Minimum Pulse Width	—	—	0.3	—	—	μs
t_{TPI}	STM STPI Input Pin Minimum Pulse Width	—	—	0.3	—	—	μs
	PTM PTPI Input Pin Minimum Pulse Width	—	—	50	—	—	ns
f_{TMCLK}	xTM Maximum Timer Clock Source Frequency	4.2V	—	—	—	1	f_{SYS}
t_{CPW}	xTM Minimum Capture Pulse Width	—	—	t_{CPW}(2)	—	—	μs
t_{INT}	Interrupt Input Pin Minimum Pulse Width	—	—	10	—	—	μs
t_{RES}	External Reset Minimum Low Pulse Width	—	—	10	—	—	μs

Note: 1. The R_{PH} internal pull high resistance value is calculated by connecting to ground and enabling the input pin with a pull-high resistor and then measuring the pin current at the specified supply voltage level. Dividing the voltage by this measured current provides the R_{PH} value.

2. For PTM:

If PTCAPTS=0, then t_{CPW}=max(2×t_{TMCLK}, t_{TPI})

If PTCAPTS=1, then t_{CPW}=max(2×t_{TMCLK}, t_{TCK})

Ex1: If PTCAPTS=0, f_{TMCLK}=16MHz, t_{TPI}=0.05μs, then t_{CPW}=max(0.125μs, 0.05μs)=0.125μs

Ex2: If PTCAPTS=1, f_{TMCLK}=12MHz, t_{TCK}=0.3μs, then t_{CPW}=max(0.16μs, 0.3μs)=0.3μs

Ex3: If PTCAPTS=0, f_{TMCLK}=8MHz, t_{TPI}=0.05μs, then t_{CPW}=max(0.25μs, 0.05μs)=0.25μs

For STM:

t_{CPW}=max(2×t_{TMCLK}, t_{TPI})

Ex1: If f_{TMCLK}=16MHz, t_{TPI}=0.3μs, then t_{CPW}=max(0.125μs, 0.3μs)=0.3μs

Ex2: If f_{TMCLK}=12MHz, t_{TPI}=0.3μs, then t_{CPW}=max(0.16μs, 0.3μs)=0.3μs

Ex3: If f_{TMCLK}=8MHz, t_{TPI}=0.3μs, then t_{CPW}=max(0.25μs, 0.3μs)=0.3μs

Where t_{TMCLK}=1/f_{TMCLK}

Memory Characteristics

Ta=-40°C~85°C, unless otherwise specified

Symbol	Parameter	Test Conditions		Min.	Typ.	Max.	Unit
		V_{DD}	Conditions				
OTP Program Memory							
V_{DD}	V_{DD} for Read – ORPP	—	—	2.5	—	4.2	V
	V_{DD} for Write – ORPP(3)	—	—	4.5	5.0	5.5	V
V_{PP}	V_{PP} for Write – ORPP	—	—	8.25	8.50	8.75	V
t_{WR}	Write Cycle Time – ORPP	—	—	—	300	450	μs
E_P	Cell Endurance – ORPP	—	—	1	—	—	W
t_{RETD}	ROM Data Retention Time	—	Ta=25°C	—	40	—	Year
Flash Program Memory – for HT45EV2140 only							
t_{WR}	Write Cycle Time	—	—	—	2.2	2.7	ms
t_{ACTV}	ROM Activation Time – Wake-up from Power Down Mode	—	—	32	—	64	μs
RAM Data Memory							
V_{DR}	RAM Data Retention Voltage	—	—	1.0	—	—	V

Note: 1. "W" means Write times.

2. The ROM activation time t_{ACTV} should be added when calculating the total system start-up time of a wake-up from the IDLE/SLEEP mode.

3. During the ORPP write operation, the V_{DD} voltage must be kept at 5V. Only after the ORPP write operation is completed can the voltage be switched to the operating voltage range of the microcontroller (2.5V to 4.2V).

LVR & LVD Electrical Characteristics

Ta=-40°C~85°C

Symbol	Parameter	Test Conditions		Min.	Typ.	Max.	Unit
		V_{DD}	Conditions				
V_{LVR}	Low Voltage Reset Roltage	—	LVR enable, voltage select 1.7V	-5%	1.7	+5%	V
			LVR enable, voltage select 1.9V	-5%	1.9	+5%	
			LVR enable, voltage select 2.55V	-3%	2.55	+3%	
			LVR enable, voltage select 3.15V	-3%	3.15	+3%	
			LVR enable, voltage select 3.8V	-3%	3.8	+3%	
V_{LVD}	Low Voltage Detection Voltage	—	LVD enable, voltage select 1.8V	-5%	1.8	+5%	V
			LVD enable, voltage select 2.0V	-5%	2.0	+5%	
			LVD enable, voltage select 2.4V	-5%	2.4	+5%	
			LVD enable, voltage select 2.7V	-5%	2.7	+5%	
			LVD enable, voltage select 3.0V	-5%	3.0	+5%	
			LVD enable, voltage select 3.3V	-5%	3.3	+5%	
			LVD enable, voltage select 3.6V	-5%	3.6	+5%	
			LVD enable, voltage select 4.0V	-5%	4.0	+5%	

Symbol	Parameter	Test Conditions		Min.	Typ.	Max.	Unit
		V_{DD}	Conditions				
$I_{LVRLVDBG}$	Operating Current	3V	LVD enable, LVR enable, V_{LVR}=1.9V, V_{LVD}=2V, VBGEN=0	—	—	10	μA
		4.2V		—	8	15	
		3V	LVD enable, LVR enable, V_{LVR}=1.9V, V_{LVD}=2V, VBGEN=1	—	—	200	μA
		4.2V		—	210	245	
t_{LVDS}	LVDO Stable Time	—	For LVR enable, VBGEN=0, LVD off → on	—	—	18	μs
			For LVR disable, VBGEN=0, LVD off → on	—	—	150	
t_{LVR}	Minimum Low Voltage Width to Reset	—	TLVR[1:0]=00B	120	240	480	μs
			TLVR[1:0]=01B	0.5	1.0	2.0	ms
			TLVR[1:0]=10B	1	2	4	
			TLVR[1:0]=11B	2	4	8	
t_{LVD}	Minimum Low Voltage Width to Interrupt	—	TLVD[1:0]=00B / 11B	60	140	220	μs
			TLVD[1:0]=01B	90	200	340	
			TLVD[1:0]=10B	150	320	580	
I_{LVR}	Additional Current for LVR Enable	4.2V	LVD disable, VBGEN=0	—	—	8	μA
I_{LVD}	Additional Current for LVD Enable	4.2V	LVR disable, VBGEN=0	—	—	8	μA

Internal Reference Voltage Characteristics

Ta=-40°C~85°C

Symbol	Parameter	Test Conditions		Min.	Typ.	Max.	Unit
		V_{DD}	Conditions				
V_{BG}	Bandgap Reference Voltage	—	—	-5%	1.2	+5%	V
t_{BGS}	V_{BG} Turn on Stable Time	—	No load	—	—	50	μs
I_{BG}	Additional Current for Bandgap Reference Enable	—	LVR disable, LVD disable	—	—	230	μA

Note: The V_{BG} voltage is used as the A/D converter internal signal input.

A/D Converter Electrical Characteristics

Ta=-40°C~85°C

Symbol	Parameter	Test Conditions		Min.	Typ.	Max.	Unit
		V_{DD}	Conditions				
V_{DD}	Operating Voltage	—	—	2.5	—	4.2	V
V_{ADI}	Input Voltage	—	—	0	—	V_{REF}	V
V_{REF}	Reference Voltage	—	—	2.5	—	V_{DD}	V
N_R	Resolution	—	—	—	—	12	Bit
DNL	Differential Nonlinearity	3V	SAINS[2:0]=000B, SAVRS[1:0]=01B, V_{REF}=V_{DD}, t_{ADCK}=0.5μs	-3	—	3	LSB
		4.2V	SAINS[2:0]=000B, SAVRS[1:0]=01B, V_{REF}=V_{DD}, t_{ADCK}=0.5μs				
		3V	SAINS[2:0]=000B, SAVRS[1:0]=01B, V_{REF}=V_{DD}, t_{ADCK}=10μs				
		4.2V	SAINS[2:0]=000B, SAVRS[1:0]=01B, V_{REF}=V_{DD}, t_{ADCK}=10μs				

Symbol	Parameter	Test Conditions		Min.	Typ.	Max.	Unit
		V_{DD}	Conditions				
INL	Integral Nonlinearity	3V	SAINS[2:0]=000B, SAVRS[1:0]=01B, V_{REF}=V_{DD}, t_{ADCK}=0.5μs	-4	—	4	LSB
		4.2V	SAINS[2:0]=000B, SAVRS[1:0]=01B, V_{REF}=V_{DD}, t_{ADCK}=0.5μs				
		3V	SAINS[2:0]=000B, SAVRS[1:0]=01B, V_{REF}=V_{DD}, t_{ADCK}=10μs				
		4.2V	SAINS[2:0]=000B, SAVRS[1:0]=01B, V_{REF}=V_{DD}, t_{ADCK}=10μs				
I_{ADC}	Additional Current for A/D Converter Enable	3V	No load, t_{ADCK}=0.5μs	—	450	600	μA
		4.2V		—	850	1000	
t_{ADCK}	Clock Period	—	2.5V≤V_{DD}≤4.2V	0.5	—	10.0	μs
t_{ON2ST}	A/D Converter On-to-Start Time	—	—	4	—	—	μs
t_{ADS}	Sampling Time	—	—	—	4	—	t_{ADCK}
t_{ADC}	Conversion time (Including A/D Sample and Hold Time)	—	—	—	16	—	t_{ADCK}
GERR	A/D Conversion Gain Error	3V	SAINS[2:0]=000B, SAVRS[1:0]=01B, V_{REF}=V_{DD}	-4	—	4	LSB
		4.2V	SAINS[2:0]=000B, SAVRS[1:0]=01B, V_{REF}=V_{DD}	-4	—	4	
OSRR	A/D Conversion Offset Error	3V	SAINS[2:0]=000B, SAVRS[1:0]=01B, V_{REF}=V_{DD}	-4	—	4	LSB
		4.2V	SAINS[2:0]=000B, SAVRS[1:0]=01B, V_{REF}=V_{DD}	-4	—	4	

High Voltage Linear Charger Electrical Characteristics

V_{IN}=5V, V_{BAT}=3.6V, R_{SET}=20kΩ, Ta= 25°C, unless otherwise specified

Symbol	Parameter	Test Condition	Min.	Typ.	Max.	Unit
Supply and Input						
V_{IN}	Input Voltage	—	4.5	5.0	7.0	V
I_{IN1}	Operation Current (Charging)	R_{SET}=20kΩ, measure I_{VIN}-I_{VBAT}	—	—	2	mA
I_{IN2}	Operation Current (Charging Done)	V_{BAT}=4.2V, measure I_{VIN}	—	—	450	μA
I_{BAT_LK1}	VBAT Leakage Current (Charger Shutdown)	D[6:0]=“0000000”	—	-1	-2	μA
I_{BAT_LK2}	VBAT Leakage Current (Invalid Input)	V_{IN}=0V	—	-1	-2	μA
I_{BAT_VREF}	VREF Operation Current	V_{IN}=0V, D[6:0]=“0110000”	—	-150	-200	μA
Over Voltage and Under Voltage Detect						
V_{IN_UVLO1}	Input Under Voltage Lockout 1	V_{IN} rising	3.8	4.0	4.2	V
V_{IN_UVLO2}	Input Under Voltage Lockout 2	V_{IN} rising	—	V_{BAT} +0.1V	—	V
$V_{IN_UVLO_HYS}$	V_{IN_UVLO1} Hysteresis Voltage	V_{IN} falling	20	100	—	mV
V_{IN_OVP}	Input Over Voltage Threshold	V_{IN} rising	7.0	7.3	7.6	V
$V_{IN_OVP_HYS}$	V_{IN_OVP} Hysteresis Voltage	V_{IN} falling	20	100	—	mV
t_{IN_OVP}	Over Voltage Response Time	V_{IN} rising at 10V/1μs	—	350	—	ns

Symbol	Parameter	Test Condition	Min.	Typ.	Max.	Unit
Linear Charger						
V_{BAT_CV1}	Battery Charging Target Voltage	V_{IN}=4.5V, R_{SET}=20kΩ, I_{BAT_LOAD}=20mA, Ta=0°C~85°C	-1%	4.2	+1%	V
V_{BAT_CV2}	Battery Charging Target Voltage	V_{IN}=5.5V, R_{SET}=2kΩ, I_{BAT_LOAD}=200mA, Ta=0°C~85°C				
V_{BAT_RECHG}	Battery Recharge Threshold	V_{BAT} falling	—	V_{BAT_CV} -0.2	—	V
V_{BAT_LOW}	Low Battery Voltage	V_{BAT} rising	2.9	3.0	3.1	V
$V_{BAT_LOW_HYS}$	V_{BAT_LOW} Hysteresis Voltage	V_{BAT} falling	—	100	—	mV
V_{IF_EN}	Interface Enable Voltage	V_{BAT} rising	2.2	—	—	V
V_{IF_DIS}	Interface Disable Voltage	V_{BAT} falling	—	—	0.8	V
I_{BAT_CC}	Programmable Constant Charging Current	R_{SET}=2kΩ	900	1000	1100	mA
		R_{SET}=4kΩ	-10%	500	+10%	mA
		R_{SET}=20kΩ	-10%	100	+10%	mA
I_{BAT_TC}	Trickle Charging Current	V_{BAT}=2.7V	-50%	0.1× I_{BAT_CC}	+50%	mA
I_{BAT_TERM}	Charge Termination Current	—	-15%	0.1× I_{BAT_CC}	+15%	mA
T_{CT}	Linear Charger Constant Temperature	—	—	125	—	°C
Others						
V_{REF}	Reference Voltage	V_{BAT}=2.5V~4.2V, I_{LOAD}=1mA	-1%	2.0	+1%	V
f_{SCL}	SCL Frequency	—	—	50	—	kHz
V_{IF}	Interface Operation Voltage	—	2.2	—	5.5	V
I_{OL}	Sink Current for CHRG Pin	V_{OL}=1.5V	2.5	—	—	mA
R_{PL}	Pull-low Resistance for SDA and SCL Signals	—	—	100	—	kΩ
$R_{DS(ON)}$	MOS On Resistance between VIN and VBAT	R_{SET}=1kΩ, V_{IN}=4.5V	—	—	800	mΩ
t_{INOK2}	VIN Status (INOK2) Holding Time on FN Signal	V_{IN}=0V~8V, V_{BAT}=2.5V~4.2V, D[6:0]=“1010000”	65	—	180	μs
t_{LCS}	Linear Charger Status Setting Time on FN Signal	V_{IN}=0V~8V, V_{BAT}=2.5V~4.2V, D[6:0]=“1010000”	—	—	30	μs
t_{VREF}	VREF Setting Time on FN Signal	V_{IN}=0V, D[6:0]=“0110000”	—	—	15	μs

Power-on Reset Characteristics

Ta=-40°C~85°C

Symbol	Parameter	Test Conditions		Min.	Typ.	Max.	Unit
		V_{DD}	Conditions				
V_{POR}	V_{DD} Start Voltage to Ensure Power-on Reset	—	—	—	—	100	mV
RR_{POR}	V_{DD} Rising Rate to Ensure Power-on Reset	—	—	0.035	—	—	V/ms
t_{POR}	Minimum Time for V_{DD} Stays at V_{POR} to Ensure Power-on Reset	—	—	1	—	—	ms

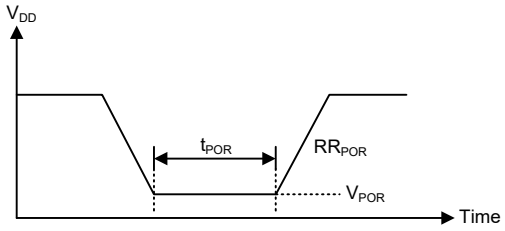

System Architecture

A key factor in the high-performance features of the Holtek range of microcontrollers is attributed to their internal system architecture. The device takes advantage of the usual features found within RISC microcontrollers providing increased speed of operation and enhanced performance. The pipelining scheme is implemented in such a way that instruction fetching and instruction execution are overlapped, hence instructions are effectively executed in one or two cycles for most of the standard or extended instructions respectively. The exceptions to these are branch or call instructions which need one more cycle. An 8-bit wide ALU is used in practically all instruction set operations, which carries out arithmetic operations, logic operations, rotation, increment, decrement, branch decisions, etc. The internal data path is simplified by moving data through the Accumulator and the ALU. Certain internal registers are implemented in the Data Memory and can be directly or indirectly addressed. The simple addressing methods of these registers along with additional architectural features ensure that a minimum of external components is required to provide a functional I/O and A/D control system with maximum reliability and flexibility. This makes the device suitable for affordable, high-volume production for controller applications.

Clocking and Pipelining

The main system clock, derived from either an HIRC or LIRC oscillator is subdivided into four internally generated non-overlapping clocks, T1~T4. The Program Counter is incremented at the beginning of the T1 clock during which time a new instruction is fetched. The remaining T2~T4 clocks carry out the decoding and execution functions. In this way, one T1~T4 clock cycle forms one instruction cycle. Although the fetching and execution of instructions takes place in consecutive instruction cycles, the pipelining structure of the microcontroller ensures that instructions are effectively executed in one instruction cycle. The exception to this are instructions where the contents of the Program Counter are changed, such as subroutine calls or jumps, in which case the instruction will take one more instruction cycle to execute.

For instructions involving branches, such as jump or call instructions, two machine cycles are required to complete instruction execution. An extra cycle is required as the program takes one cycle to first obtain the actual jump or call address and then another cycle to actually execute the branch. The requirement for this extra cycle should be taken into account by programmers in timing sensitive applications.

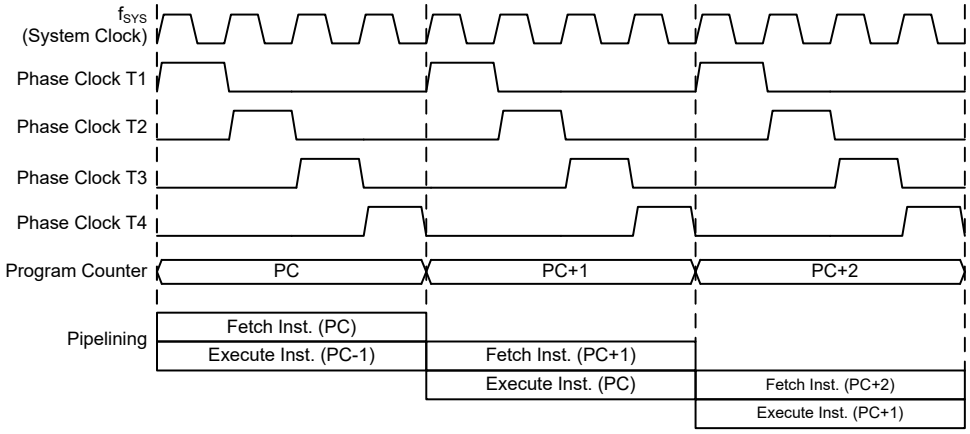

System Clocking and Pipelining

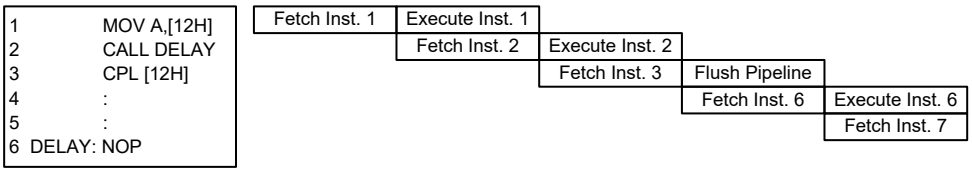

Instruction Fetching

Program Counter

During program execution, the Program Counter is used to keep track of the address of the next instruction to be executed. It is automatically incremented by one each time an instruction is executed except for instructions, such as "JMP" or "CALL" that demand a jump to a non-consecutive Program Memory address. Only the lower 8 bits, known as the Program Counter Low Register, are directly addressable by the application program.

When executing instructions requiring jumps to non-consecutive addresses such as a jump instruction, a subroutine call, interrupt or reset, etc., the microcontroller manages program control by loading the required address into the Program Counter. For conditional skip instructions, once the condition has been met, the next instruction, which has already been fetched during the present instruction execution, is discarded and a dummy cycle takes its place while the correct instruction is obtained.

Program Counter	
Program Counter High Byte	**PCL Register**
PC11~PC8	PCL7~PCL0

Program Counter

The lower byte of the Program Counter, known as the Program Counter Low register or PCL, is available for program control and is a readable and writeable register. By transferring data directly into this register, a short program jump can be executed directly; however, as only this low byte is available for manipulation, the jumps are limited to the present page of memory that is 256 locations. When such program jumps are executed it should also be noted that a dummy cycle will be inserted. Manipulating the PCL register may cause program branching, so an extra cycle is needed to pre-fetch.

Stack

This is a special part of the memory which is used to save the contents of the Program Counter only. The stack, organized into 8 levels, is neither part of the data nor part of the program space, and is neither readable nor writeable. The activated level is indexed by the Stack Pointer, and is neither readable nor writeable. At a subroutine call or interrupt acknowledge signal, the contents of the Program Counter are pushed onto the stack. At the end of a subroutine or an interrupt routine, signaled by a return instruction, RET or RETI, the Program Counter is restored to its previous value from the stack. After a device reset, the Stack Pointer will point to the top of the stack.

If the stack is full and an enabled interrupt takes place, the interrupt request flag will be recorded but the acknowledge signal will be inhibited. When the Stack Pointer is decremented, by RET or RETI, the interrupt will be serviced. This feature prevents stack overflow allowing the programmer to use the structure more easily. However, when the stack is full, a CALL subroutine instruction can still be executed which will result in a stack overflow. Precautions should be taken to avoid such cases which might cause unpredictable program branching.

If the stack is overflow, the first Program Counter save in the stack will be lost.

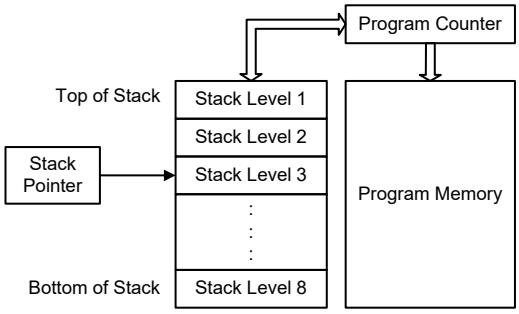

Arithmetic and Logic Unit – ALU

The arithmetic-logic unit or ALU is a critical area of the microcontroller that carries out arithmetic and logic operations of the instruction set. Connected to the main microcontroller data bus, the ALU receives related instruction codes and performs the required arithmetic or logical operations after which the result will be placed in the specified register. As these ALU calculation or operations may result in carry, borrow or other status changes, the status register will be correspondingly updated to reflect these changes. The ALU supports the following functions:

- Arithmetic operations:

  ADD, ADDM, ADC, ADCM, SUB, SUBM, SBC, SBCM, DAA

  LADD, LADDM, LADC, LADCM, LSUB, LSUBM, LSBC, LSBCM, LDAA
- Logic operations:

  AND, OR, XOR, ANDM, ORM, XORM, CPL, CPLA

  LAND, LOR, LXOR, LANDM, LORM, LXORM, LCPL, LCPLA
- Rotation:

  RRA, RR, RRCA, RRC, RLA, RL, RLCA, RLC

  LRRA, LRR, LRRCA, LRRC, LRLA, LRL, LRLCA, LRLC
- Increment and Decrement:

  INCA, INC, DECA, DEC

  LINCA, LINC, LDECA, LDEC
- Branch decision:

  JMP, SZ, SZA, SNZ, SIZ, SDZ, SIZA, SDZA, CALL, RET, RETI

  LSZ, LSZA, LSNZ, LSIZ, LSDZ, LSIZA, LSDZA

OTP Program Memory

The Program Memory is the location where the user code or program is stored. The device is supplied with One-Time Programmable, OTP memory where users can program their application code into the device.

Structure

The Program Memory has a capacity of 4K×16 bits. The Program Memory is addressed by the Program Counter and also contains data, table information and interrupt entries. Table data, which can be set in any location within the Program Memory, is addressed by a separate table pointer register.

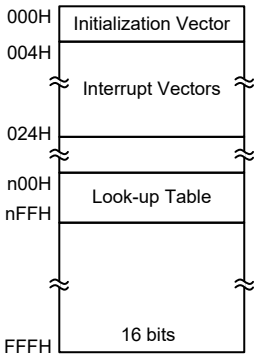

Program Memory Structure

Special Vectors

Within the Program Memory, certain locations are reserved for the reset and interrupts. The location 000H is reserved for use by the device reset for program initialisation. After a device reset is initiated, the program will jump to this location and begin execution.

Look-up Table

Any location within the Program Memory can be defined as a look-up table where programmers can store fixed data. To use the look-up table, the table pointer must first be setup by placing the address of the look up data to be retrieved in the table pointer registers, TBLP and TBHP. These registers define the total address of the look-up table.

After setting up the table pointer, the table data can be retrieved from the Program Memory using the corresponding table read instruction such as “TABRD [m]” or “TABRDL [m]” respectively when the memory [m] is located in Sector 0. If the memory [m] is located in other sectors, the data can be retrieved from the program memory using the corresponding extended table read instruction such as “LTABRD [m]” or “LTABRDL [m]” respectively. When the instruction is executed, the lower order table byte from the Program Memory will be transferred to the user defined Data Memory register [m] as specified in the instruction. The higher order table data byte from the Program Memory will be transferred to the TBLH special register.

The accompanying diagram illustrates the addressing data flow of the look-up table.

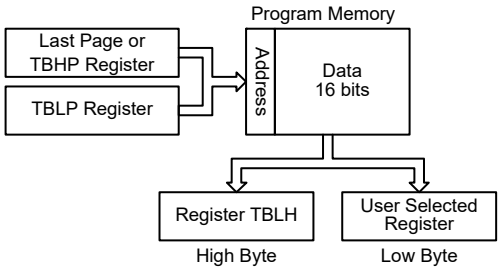

Table Program Example

The following example shows how the table pointer and table data is defined and retrieved from the microcontroller. This example uses raw table data located in the Program Memory which is stored there using the ORG statement. The value at this ORG statement is "0F00H" which refers to the start address of the last page within the 4K Program Memory of the device. The table pointer low byte register is setup here to have an initial value of "06H". This will ensure that the first data read from the data table will be at the Program Memory address "0F06H" or 6 locations after the start of the last page. Note that the value for the table pointer is referenced to the first address specified by TBLP and TBHP if the "TABRD [m]" or "LTABRD [m]" instruction is being used. The high byte of the table data which in this case is equal to zero will be transferred to the TBLH register automatically when the "TABRD [m]" or "LTABRD [m]" instruction is executed.

Because the TBLH register is a read/write register and can be restored, care should be taken to ensure its protection if both the main routine and Interrupt Service Routine use table read instructions. If using the table read instructions, the Interrupt Service Routines may change the value of the TBLH and subsequently cause errors if used again by the main routine. As a rule, it is recommended that simultaneous use of the table read instructions should be avoided. However, in situations where simultaneous use cannot be avoided, the interrupts should be disabled prior to the execution of any main routine table-read instructions. Note that all table related instructions require two instruction cycles to complete their operation.

Table Read Program Example

```
tempreg1 db ?     ; temporary register #1
tempreg2 db ?     ; temporary register #2
:
:
mov a,06h         ; initialise low table pointer - note that this address is referenced
mov tblp,a        ; to the last page or the page that tbhp pointed
mov a,0Fh         ; initialise high table pointer
mov tbhp,a
:
:
tabrd tempreg1    ; transfers value in table referenced by table pointer data at
                  ; program memory address "0F06H" transferred to tempreg1 and TBLH
dec tblp          ; reduce value of table pointer by one
tabrd tempreg2    ; transfers value in table referenced by table pointer
                  ; data at program memory address "0F05H" transferred to
                  ; tempreg2 and TBLH in this example the data "1AH" is
                  ; transferred to tempreg1 and data "0FH" to register tempreg2
:
:
org 0F00h         ; sets initial address of program memory
```

```
dc 00Ah, 00Bh, 00Ch, 00Dh, 00Eh, 00Fh, 01Ah, 01Bh
:
:
```

In Circuit Programming – ICP

The OTP type Program Memory is provided for users to program their application One-Time into the device. As an additional convenience, Holtek has provided a means of programming the microcontroller in-circuit using a 5-pin interface. This provides manufacturers with the possibility of manufacturing their circuit boards complete with an un-programmed microcontroller, and then programming the program at a later stage.

Holtek Writer Pins	MCU Programming Pins	Pin Description
ICPDA	PA0	Programming Serial Data/Address
ICPCK	PA2	Programming Clock
VPP	VPP	Programming OTP ROM power supply (8.5V)
VDD	VDD	Power Supply. A 0.1μF capacitor is required to be connected between VDD and VSS for programming.
VSS	VSS	Ground

The Program Memory can be programmed serially in-circuit using this 5-wire interface. Data is downloaded and uploaded serially on a single pin with an additional line for the clock. Three additional lines are required for the power supply. The technical details regarding the in-circuit programming of the device is beyond the scope of this document and will be supplied in supplementary literature.

During the programming process, the user must take care of the ICPDA and ICPCK pins for data and clock programming purposes to ensure that no other outputs are connected to these two pins.

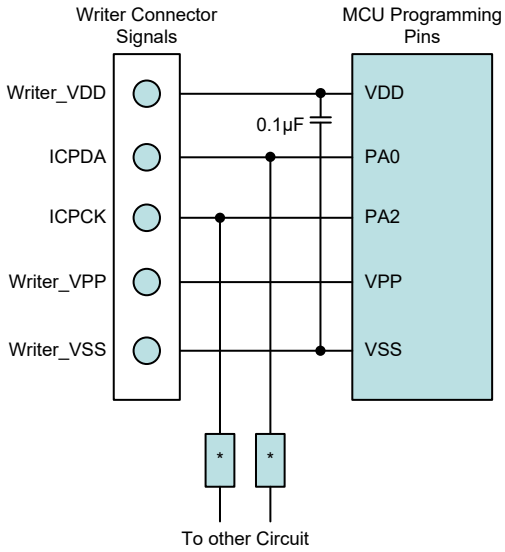

Note: 1. A 0.1μF capacitor is required to be connected between VDD and VSS for ICP programming and located as close to these pins as possible.
2. * may be resistor or capacitor. The resistance of * must be greater than 1kΩ or the capacitance of * must be less than 1nF.

On-Chip Debug Support – OCDS

There is an EV chip named HT45EV2140 which is used to emulate the real MCU device named HT45R2140. The EV chip device also provides an "On-Chip Debug" function to debug the real MCU device during the development process. The EV chip and the real MCU device are almost functionally compatible except for "On-Chip Debug" function. Users can use the EV chip device to emulate the real chip device behavior by connecting the OCDSDA and OCDSCK pins to the Holtek HT-IDE development tools. The OCDSDA pin is the OCDS Data/Address input/output pin while the OCDSCK pin is the OCDS clock input pin. When users use the EV chip for debugging, other functions which are shared with the OCDSDA and OCDSCK pins in the device will have no effect in the EV chip. For more detailed OCDS information, refer to the corresponding document named "Holtek e-Link for 8-bit MCU OCDS User's Guide".

Holtek e-Link Pins	EV Chip Pins	Pin Description
OCDSDA	OCDSDA	On-Chip Debug Support Data/Address input/output
OCDSCK	OCDSCK	On-Chip Debug Support Clock input
VDD	VDD	Power Supply
VSS	VSS	Ground

OTP ROM Parameter Program – ORPP

This device contains an ORPP function. The provision of the ORPP function offers users the convenience of OTP Memory programming features. Note that the Write operation only writes data to the last page of OTP Program Memory, and the data can only be written once and cannot be erased.

Before the write operation is implemented, the VPP pin must be connected to an 8.5V power and after the write operation is completed, the high voltage power should be removed from the VPP pin. If the VPP function is pin-shared with an I/O port, the corresponding I/O port cannot be set as an output when it is used as the VPP function.

ORPP Registers

Three registers control the overall operation of the internal ORPP function. These are data registers ODL and ODH, and a control register OCR.

Register Name	Bit							
	7	6	5	4	3	2	1	0
OCR	—	—	—	—	WREN	WR	—	—
ODL	D7	D6	D5	D4	D3	D2	D1	D0
ODH	D15	D14	D13	D12	D11	D10	D9	D8

ORPP Register List

- **ODL Register**

Bit	7	6	5	4	3	2	1	0
Name	D7	D6	D5	D4	D3	D2	D1	D0
R/W	R/W	R/W	R/W	R/W	R/W	R/W	R/W	R/W
POR	0	0	0	0	0	0	0	0

Bit 7~0 **D7~D0**: ORPP Program Memory data bit 7 ~ bit 0

• **ODH Register**

Bit	7	6	5	4	3	2	1	0
Name	D15	D14	D13	D12	D11	D10	D9	D8
R/W	R/W	R/W	R/W	R/W	R/W	R/W	R/W	R/W
POR	0	0	0	0	0	0	0	0

Bit 7~0 **D15~D8**: ORPP Program Memory data bit 15 ~ bit 8

• **OCR Register**

Bit	7	6	5	4	3	2	1	0
Name	—	—	—	—	WREN	WR	—	—
R/W	—	—	—	—	R/W	R/W	—	—
POR	—	—	—	—	0	0	—	—

Bit 7~4 Unimplemented, read as "0"

Bit 3 **WREN**: ORPP Write Enable
0: Disable
1: Enable
This is the ORPP Write Enable Bit which must be set high before write operations are carried out. This bit will be automatically reset to zero by the hardware after the write cycle has finished. Clearing this bit to zero will inhibit ORPP write operations.

Bit 2 **WR**: ORPP Write Control
0: Write cycle has finished
1: Activate a write cycle
This is the ORPP Write Control Bit and when set high by the application program will activate a write cycle. This bit will be automatically reset to zero by the hardware after the write cycle has finished. Setting this bit high will have no effect if the WREN has not first been set high.

Bit 1~0 Unimplemented, read as "0"

Note: 1. The WREN and WR cannot be set high at the same time in one instruction.
2. Note that the CPU will be stopped when a write operation is successfully activated.
3. Ensure that the f_{SUB} clock is stable before executing the write operation.
4. Ensure that the write operation is totally complete before executing other operations.

ORPP Writing Data to the OTP Program Memory

For ORPP write operation the data to be written should be placed in the ODH and ODL registers and the desired write address should first be placed in the TBLP register. To write data to the OTP Program Memory, the write enable bit, WREN, in the OCR register must first be set high to enable the write function. After this, the WR bit in the OCR register must be immediately set high to initiate a write cycle. These two instructions must be executed in two consecutive instruction cycles to activate a write operation successfully. The global interrupt bit EMI should also first be cleared before implementing any write operations, and then set again after a valid write activation procedure has completed. Note that the CPU will be stopped when a write operation is successfully activated. When the write cycle terminates, the CPU will resume executing the application program. And the WR bit will be automatically cleared to zero by the microcontroller, informing the user that the data has been written to the OTP Program Memory.

ORPP Reading Data from the OTP Program Memory

For ORPP read operation the desired address should first be placed in the TBLP register. Then the data can be retrieved from the program memory using the "TABRDL [m]" instruction. When the instruction is executed, the lower order table byte from the Program Memory will be transferred to the user defined Data Memory register [m] as specified in the instruction. The higher order table data byte from the Program Memory will be transferred to the TBLH special register.

Programming Considerations

Care must be taken that data is not inadvertently written to the OTP Program Memory. Protection can be enhanced by ensuring that the Write Enable bit is normally cleared to zero when not writing. Although certainly not necessary, consideration might be given in the application program to the checking of the validity of new write data by a simple read back process.

When writing data the WR bit must be set high immediately after the WREN bit has been set high, to ensure the write cycle executes correctly. The global interrupt bit EMI should also be cleared before a write cycle is executed and then set high again after a write activation procedure has completed. Note that the device should not enter the IDLE or SLEEP mode until the ORPP write operation is totally complete. Otherwise, the ORPP write operation will fail.

Programming Examples

ORPP Reading data from the OTP Program Memory

```
Tempreg1 db?         ; temporary register
MOV A, 03H
MOV TBLP, A          ; set read address 03H
TABRDL Tempreg1      ; transfers value in table (last page)
                     ; referenced by table pointer,
                     ; data at program memory address "0F03H"
                     ; transferred to tempreg1 and TBLH
```

ORPP Writing Data to the OTP Program Memory

```
MOV A, ORPP_ADRES    ; user defined address
MOV TBLP, A
MOV A, ORPP_DATA_L   ; user defined data
MOV ODL, A
MOV A, ORPP_DATA_H
MOV ODH, A
MOV A, 00H
MOV OCR, A
CLR EMI
SET WREN             ; set WREN bit, enable write operation
SET WR               ; start Write Cycle - set WR bit - executed immediately
                     ; after setting WREN bit
SET EMI
BACK:
SZ  WR               ; check for write cycle end
JMP BACK
NOP
```

Data Memory

The Data Memory is a volatile area of 8-bit wide RAM internal memory and is the location where temporary information is stored.

Categorised into two types, the first of these is an area of RAM, known as the Special Function Data Memory. These registers have fixed locations and are necessary for correct operation of the device. Many of these registers can be read from and written to directly under program control, however, some remain protected from user manipulation. The second area of Data Memory is known as the General Purpose Data Memory, which is reserved for general purpose use. All locations within this area are read and write accessible under program control.

Switching between the different Data Memory sectors is achieved by properly setting the Memory Pointers to correct value when using the indirectly accessing method.

Structure

The Data Memory is subdivided into several sectors, all of which are implemented in 8-bit wide RAM. Each of the Data Memory Sector is categorized into two types, the Special Purpose Data Memory and the General Purpose Data Memory. The address range of the Special Purpose Data Memory for the device is from 00H to 7FH while the General Purpose Data Memory address range is from 80H to FFH.

Special Purpose Data Memory	General Purpose Data Memory	
Located Sector	Capacity	Sector: Address
0	256×8	0: 80H~FFH 1: 80H~FFH

Data Memory Summary

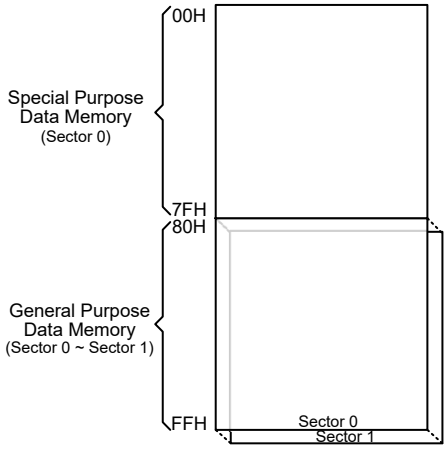

Data Memory Structure

Data Memory Addressing

For the device that supports the extended instructions, there is no Bank Pointer for Data Memory addressing. The desired Sector is pointed by the MP1H or MP2H register and the certain Data Memory address in the selected sector is specified by the MP1L or MP2L register when using indirect addressing access. Direct Addressing can be used in all sectors using the corresponding instruction which can address all available data memory space. For the accessed data memory which is located in any data memory sectors except Sector 0, the extended instructions can be used to access the data memory instead of using the indirect addressing access. The main difference between standard instructions and extended instructions is that the data memory address “m” in the extended instructions has 9 valid bits, the high byte indicates a sector and the low byte indicates a specific address within the sector.

General Purpose Data Memory

All microcontroller programs require an area of read/write memory where temporary data can be stored and retrieved for use later. It is this area of RAM memory that is known as General Purpose Data Memory. This area of Data Memory is fully accessible by the user programming for both reading and writing operations. By using the bit operation instructions individual bits can be set or reset under program control giving the user a large range of flexibility for bit manipulation in the Data Memory.

Special Purpose Data Memory

This area of Data Memory is where registers, necessary for the correct operation of the microcontroller, are stored. Most of the registers are both readable and writeable but some are protected and are readable only, the details of which are located under the relevant Special Function Register section. Note that for locations that are unused, any read instruction to these addresses will return the value “00H”.

	Sector 0
00H	IAR0
01H	MP0
02H	IAR1
03H	MP1L
04H	MP1H
05H	ACC
06H	PCL
07H	TBLP
08H	TBLH
09H	TBHP
0AH	STATUS
0BH	
0CH	IAR2
0DH	MP2L
0EH	MP2H
0FH	RSTFC
10H	INTC0
11H	INTC1
12H	INTC2
13H	INTEG
14H	PA
15H	PAC
16H	PAPU
17H	PAWU
18H	PB
19H	PBC
1AH	PBPU
1BH	PC
1CH	PCC
1DH	PCPU
1EH	MFI0
1FH	MFI1
20H	MFI2
21H	TB0C
22H	TB1C
23H	PSC0R
24H	PSC1R
25H	
26H	
27H	SADC0
28H	SADC1
29H	
2AH	SADOL
2BH	SADOH
2CH	OCR
2DH	ODL
2EH	ODH
2FH	PWMC
30H	PWMPL
31H	PWMPH
32H	PWMCL
33H	PWMCH
34H	PWM0DL
35H	PWM0DH
36H	PWM1DL
37H	PWM1DH
38H	PWM2DL
39H	PWM2DH
3AH	PWM3DL
3BH	PWM3DH
3CH	PWM4DL
3DH	PWM4DH
3EH	RSTC
3FH	LVDC

	Sector 0
40H	SCC
41H	HIRCC
42H	ORMC
43H	TLVRC
44H	WDTC
45H	LVRC
46H	PTMC0
47H	PTMC1
48H	PTMC2
49H	PTMDL
4AH	PTMDH
4BH	PTMAL
4CH	PTMAH
4DH	PTMBL
4EH	PTMBH
4FH	PTMRPL
50H	PTMRPH
51H	STMC0
52H	STMC1
53H	STMDL
54H	STMDH
55H	STMAL
56H	STMAH
57H	PAS0
58H	PAS1
59H	PBS0
5AH	PBS1
5BH	
5CH	IFS
5DH	SLEDC0
5EH	SLEDC1
5FH	
7FH	

: Unused, read as 00H

: Reserved, cannot be changed

Special Purpose Data Memory

Special Function Register Description

Most of the Special Function Register details will be described in the relevant functional section; however several registers require a separate description in this section.

Indirect Addressing Registers – IAR0, IAR1, IAR2

The Indirect Addressing Registers, IAR0, IAR1 and IAR2, although having their locations in normal RAM register space, do not actually physically exist as normal registers. The method of indirect addressing for RAM data manipulation uses these Indirect Addressing Registers and Memory Pointers, in contrast to direct memory addressing, where the actual memory address is specified. Actions on the IAR0, IAR1 and IAR2 registers will result in no actual read or write operation to these registers but rather to the memory location specified by their corresponding Memory Pointers, MP0, MP1L/MP1H or MP2L/MP2H. Acting as a pair, IAR0 and MP0 can together access data only from Sector 0 while the IAR1 register together with the MP1L/MP1H register pair and IAR2 register together with the MP2L/MP2H register pair can access data from any Data Memory Sector. As the Indirect Addressing Registers are not physically implemented, reading the Indirect Addressing Registers will return a result of "00H" and writing to the registers will result in no operation.

Memory Pointers – MP0, MP1L, MP1H, MP2L, MP2H

Five Memory Pointers, known as MP0, MP1L, MP1H, MP2L, MP2H, are provided. These Memory Pointers are physically implemented in the Data Memory and can be manipulated in the same way as normal registers providing a convenient way with which to address and track data. When any operation to the relevant Indirect Addressing Registers is carried out, the actual address that the microcontroller is directed to is the address specified by the related Memory Pointer. MP0, together with Indirect Addressing Register, IAR0, are used to access data from Sector 0, while MP1L/MP1H together with IAR1 and MP2L/MP2H together with IAR2 are used to access data from all sectors according to the corresponding MP1H or MP2H register. Direct Addressing can be used in all sectors using the corresponding instruction which can address all available data memory space. The following example shows how to clear a section of four Data Memory locations already defined as locations adres1 to adres4.

Indirect Addressing Program Example 1

```
data .section ´data´
adres1  db ?
adres2  db ?
adres3  db ?
adres4  db ?
block   db ?
code .section at 0 ´code´
org 00h
start:
    mov a, 04h             ; setup size of block
    mov block, a
    mov a, offset adres1   ; Accumulator loaded with first RAM address
    mov mp0, a             ; setup memory pointer with first RAM address
loop:
    clr IAR0               ; clear the data at address defined by MP0
    inc mp0                ; increase memory pointer
    sdz block              ; check if last memory location has been cleared
    jmp loop
continue:
```

Indirect Addressing Program Example 2

```
data .section ´data´
adres1  db ?
adres2  db ?
adres3  db ?
adres4  db ?
block   db ?
code .section at 0 ´code´
org 00h
start:
    mov a, 04h                ; setup size of block
    mov block, a
    mov a, 01h                ; setup the memory sector
    mov mp1h, a
    mov a, offset adres1      ; Accumulator loaded with first RAM address
    mov mp1l, a               ; setup memory pointer with first RAM address
loop:
    clr IAR1                  ; clear the data at address defined by MP1L
    inc mp1l                  ; increase memory pointer MP1L
    sdz block                 ; check if last memory location has been cleared
    jmp loop
continue:
```

The important point to note here is that in the example shown above, no reference is made to specific Data Memory addresses.

Direct Addressing Program Example using extended instructions

```
data .section ´data´
temp  db ?
code .section at 0 ´code´
org 00h
start:
    lmov a, [m]               ; move [m] data to acc
    lsub a, [m+1]             ; compare [m] and [m+1] data
    snz c                     ; [m]>[m+1]?
    jmp continue              ; no
    lmov a, [m]               ; yes, exchange [m] and [m+1] data
    mov temp, a
    lmov a, [m+1]
    lmov [m], a
    mov a, temp
    lmov [m+1], a
continue:
```

Note: Here “m” is a data memory address located in any data memory sectors. For example, m=1F0H, it indicates address 0F0H in Sector 1.

Accumulator – ACC

The Accumulator is central to the operation of any microcontroller and is closely related with operations carried out by the ALU. The Accumulator is the place where all intermediate results from the ALU are stored. Without the Accumulator it would be necessary to write the result of each calculation or logical operation such as addition, subtraction, shift, etc., to the Data Memory resulting in higher programming and timing overheads. Data transfer operations usually involve the temporary storage function of the Accumulator; for example, when transferring data between one user-defined register and another, it is necessary to do this by passing the data through the Accumulator as no direct transfer between two registers is permitted.

Program Counter Low Byte Register – PCL

To provide additional program control functions, the low byte of the Program Counter is made accessible to programmers by locating it within the Special Purpose area of the Data Memory. By manipulating this register, direct jumps to other program locations are easily implemented. Loading a value directly into this PCL register will cause a jump to the specified Program Memory location, however, as the register is only 8-bit wide, only jumps within the current Program Memory page are permitted. When such operations are used, note that a dummy cycle will be inserted.

Look-up Table Registers – TBLP, TBHP, TBLH

These three special function registers are used to control operation of the look-up table which is stored in the Program Memory. TBLP and TBHP are the table pointers and indicate the location where the table data is located. Their value must be setup before any table read commands are executed. Their value can be changed, for example using the "INC" or "DEC" instructions, allowing for easy table data pointing and reading. TBLH is the location where the high order byte of the table data is stored after a table read data instruction has been executed. Note that the lower order table data byte is transferred to a user defined location.

Option Memory Mapping Register – ORMC

The ORMC register is used to enable the Option Memory Mapping function. The Option Memory capacity is 64 words. When a specific pattern of 55H and AAH is consecutively written into this register, the Option Memory Mapping function will be enabled and then the Option Memory code can be read by using the table read instruction. The Option Memory addresses 00H~3FH will be mapped to Program Memory last page addresses C0H~FFH.

To successfully enable the Option Memory Mapping function, the specific pattern of 55H and AAH must be written into the ORMC register in two consecutive instruction cycles. It is therefore recommended that the global interrupt bit EMI should first be cleared before writing the specific pattern, and then set high again at a proper time according to users' requirements after the pattern is successfully written. An internal timer will be activated when the pattern is successfully written. The mapping operation will be automatically finished after a period of $4\times t_{LIRC}$. Therefore, users should read the data in time, otherwise the Option Memory Mapping function needs to be restarted. After the completion of each consecutive write operation to the ORMC register, the timer will recount.

When the table read instructions are used to read the Option Memory code, both "TABRD [m]" and "TABRDL [m]" instructions can be used. However, care must be taken if the "TABRD [m]" instruction is used, the table pointer defined by the TBHP register must be referenced to the last page. Refer to corresponding sections about the table read instruction for more details.

- **ORMC Register**

Bit	7	6	5	4	3	2	1	0
Name	ORMC7	ORMC6	ORMC5	ORMC4	ORMC3	ORMC2	ORMC1	ORMC0
R/W	R/W	R/W	R/W	R/W	R/W	R/W	R/W	R/W
POR	0	0	0	0	0	0	0	0

Bit 7~0 **ORMC7~ORMC0**: Option Memory Mapping specific pattern
When a specific pattern of 55H and AAH is written into this register, the Option Memory Mapping function will be enabled. Note that the register content will be cleared after the MCU is woken up from the IDLE/SLEEP mode.

Status Register – STATUS

This 8-bit register contains the SC flag, CZ flag, zero flag (Z), carry flag (C), auxiliary carry flag (AC), overflow flag (OV), power down flag (PDF), and watchdog time-out flag (TO). These arithmetic/logical operation and system management flags are used to record the status and operation of the microcontroller.

With the exception of the TO and PDF flags, bits in the status register can be altered by instructions like most other registers. Any data written into the status register will not change the TO or PDF flag. In addition, operations related to the status register may give different results due to the different instruction operations. The TO flag can be affected only by a system power-up, a WDT time-out or by executing the "CLR WDT" or "HALT" instruction. The PDF flag is affected only by executing the "HALT" or "CLR WDT" instruction or during a system power-up.

The Z, OV, AC, C, SC and CZ flags generally reflect the status of the latest operations.

- C is set if an operation results in a carry during an addition operation or if a borrow does not take place during a subtraction operation; otherwise C is cleared. C is also affected by a rotate through carry instruction.
- AC is set if an operation results in a carry out of the low nibbles in addition, or no borrow from the high nibble into the low nibble in subtraction; otherwise AC is cleared.
- Z is set if the result of an arithmetic or logical operation is zero; otherwise Z is cleared.
- OV is set if an operation results in a carry into the highest-order bit but not a carry out of the highest-order bit, or vice versa; otherwise OV is cleared.
- PDF is cleared by a system power-up or executing the "CLR WDT" instruction. PDF is set by executing the "HALT" instruction.
- TO is cleared by a system power-up or executing the "CLR WDT" or "HALT" instruction. TO is set by a WDT time-out.
- CZ is the operational result of different flags for different instructions. Refer to register definitions for more details.
- SC is the result of the "XOR" operation which is performed by the OV flag and the MSB of the current instruction operation result.

In addition, on entering an interrupt sequence or executing a subroutine call, the status register will not be pushed onto the stack automatically. If the contents of the status register are important and if the subroutine can corrupt the status register, precautions must be taken to correctly save it.

• STATUS Register

Bit	7	6	5	4	3	2	1	0
Name	SC	CZ	TO	PDF	OV	Z	AC	C
R/W	R/W	R/W	R	R	R/W	R/W	R/W	R/W
POR	x	x	0	0	x	x	x	x

"x": Unknown

Bit 7 **SC**: The result of the "XOR" operation which is performed by the OV flag and the MSB of the instruction operation result

Bit 6 **CZ**: The operational result of different flags for different instructions

For SUB/SUBM/LSUB/LSUBM instructions, the CZ flag is equal to the Z flag.

For SBC/SBCM/LSBC/LSBCM instructions, the CZ flag is the "AND" operation result which is performed by the previous operation CZ flag and current operation zero flag.

For other instructions, the CZ flag will not be affected.

Bit 5 **TO**: Watchdog Time-out flag
0: After power up or executing the "CLR WDT" or "HALT" instruction
1: A watchdog time-out occurred.

Bit 4 **PDF**: Power down flag
0: After power up or executing the "CLR WDT" instruction
1: By executing the "HALT" instruction

Bit 3 **OV**: Overflow flag
0: No overflow
1: An operation results in a carry into the highest-order bit but not a carry out of the highest-order bit or vice versa.

Bit 2 **Z**: Zero flag
0: The result of an arithmetic or logical operation is not zero
1: The result of an arithmetic or logical operation is zero

Bit 1 **AC**: Auxiliary flag
0: No auxiliary carry
1: An operation results in a carry out of the low nibbles in addition, or no borrow from the high nibble into the low nibble in subtraction

Bit 0 **C**: Carry flag
0: No carry-out
1: An operation results in a carry during an addition operation or if a borrow does not take place during a subtraction operation

The "C" flag is also affected by a rotate through carry instruction.

Oscillators

Various oscillator options offer the user a wide range of functions according to their various application requirements. The flexible features of the oscillator functions ensure that the better optimisation can be achieved in terms of speed and power saving. Oscillator operations are selected through the combination of configuration option and relevant control registers.

Oscillator Overview

In addition to being the source of the main system clock the oscillators also provide clock sources for the Watchdog Timer and Time Base Interrupts. Two fully integrated internal oscillators, requiring no external components, are provided to form a wide range of both fast and slow system oscillators. The higher frequency oscillator provides higher performance but carry with it the disadvantage of higher power requirements, while the opposite is of course true for the lower frequency oscillator. With the capability of dynamically switching between fast and slow system clock, the device has the flexibility to optimize the performance/power ratio, a feature especially important in power sensitive portable applications.

Type	Name	Frequency
Internal High Speed RC	HIRC	8/12/16MHz
Internal Low Speed RC	LIRC	32kHz

Oscillator Types

System Clock Configurations

There are two oscillator sources, one high speed oscillator and one low speed oscillator. The high speed system clock is sourced from the internal 8/12/16MHz RC oscillator, HIRC. The low speed oscillator is the internal 32kHz RC oscillator, LIRC. Selecting whether the low or high speed oscillator is used as the system oscillator is implemented using the CKS2~CKS0 bits in the SCC register and the system clock can be dynamically selected.

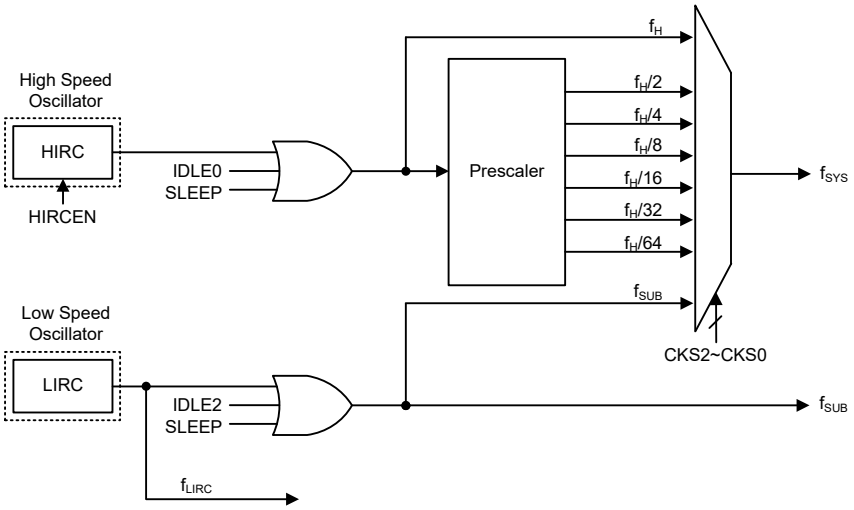

System Clock Configuration

Internal High Speed RC Oscillator – HIRC

The high speed internal RC oscillator is a fully integrated system oscillator requiring no external components. The internal RC oscillator has three fixed frequencies of 8MHz, 12MHz and 16MHz, which are selected using a configuration option. The HIRC1~HIRC0 bits in the HIRCC register must also be setup to match the selected configuration option frequency. Setting up these bits is necessary to ensure that the HIRC frequency accuracy specified in the A.C. Characteristics is achieved. Device trimming during the manufacturing process and the inclusion of internal frequency compensation circuits are used to ensure that the influence of the power supply voltage, temperature and process variations on the oscillation frequency are minimised.

Internal 32kHz Oscillator – LIRC

The Internal 32kHz System Oscillator is a fully integrated low frequency RC oscillator with a typical frequency of 32kHz, requiring no external components for its implementation.

Operating Modes and System Clocks

Present day applications require that their microcontrollers have high performance but often still demand that they consume as little power as possible, conflicting requirements that are especially true in battery powered portable applications. The fast clocks required for high performance will by their nature increase current consumption and of course vice versa, lower speed clocks reduce current consumption. As Holtek has provided the device with both high and low speed clock sources and the means to switch between them dynamically, the user can optimise the operation of their microcontroller to achieve the best performance/power ratio.

System Clocks

The device has many different clock sources for both the CPU and peripheral function operation. By providing the user with a wide range of clock options using register programming, a clock system can be configured to obtain maximum application performance. The main system clock, can come from a high frequency, f_H, or low frequency, f_{SUB}, source, and is selected using the CKS2~CKS0 bits in the SCC register. The high speed system clock is sourced from the HIRC oscillator. The low speed system clock source is sourced from the LIRC oscillator. The other choice, which is a divided version of the high speed system oscillator has a range of $f_H/2$~$f_H/64$.

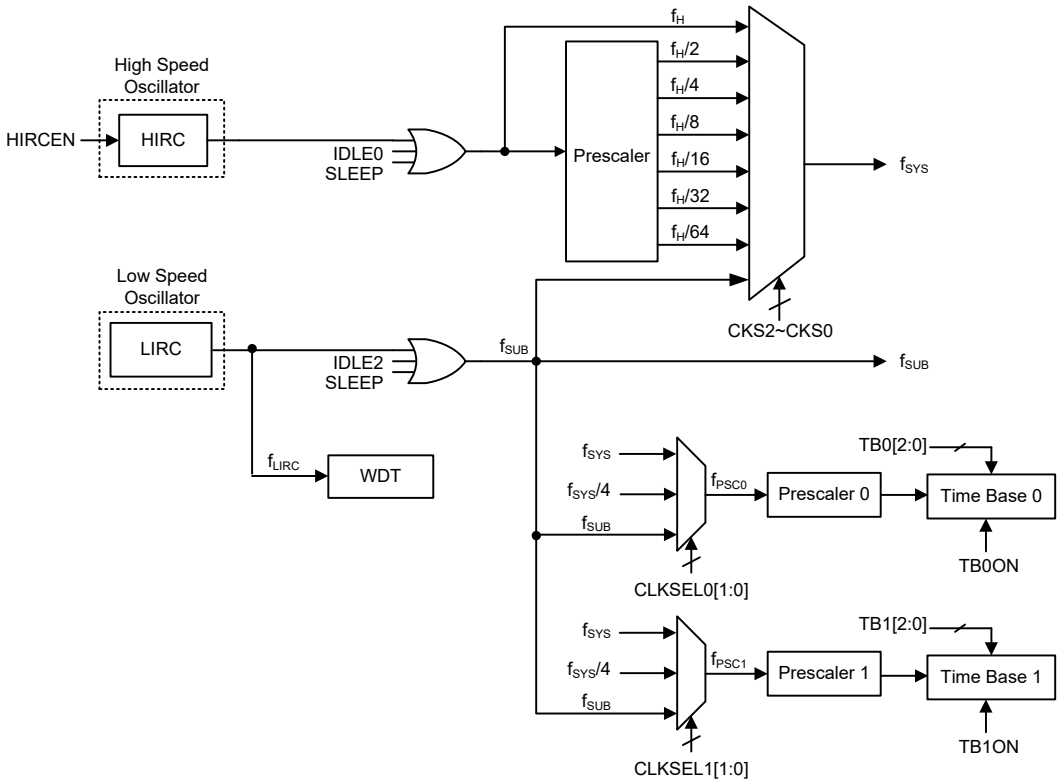

Device Clock Configurations

Note: When the system clock source f_{SYS} is switched to f_{SUB} from f_H, the high speed oscillator will stop to conserve the power or continue to oscillate to provide the clock source, f_H~f_H/64, for peripheral circuit to use, which is determined by configuring the corresponding high speed oscillator enable control bit.

System Operation Modes

There are six different modes of operation for the microcontrollers, each one with its own special characteristics and which can be chosen according to the specific performance and power requirements of the application. There are two modes allowing normal operation of the microcontroller, the FAST Mode and SLOW Mode. The remaining four modes, the SLEEP, IDLE0, IDLE1 and IDLE2 Mode are used when the microcontroller CPU is switched off to conserve power.

Operation Mode	CPU	Register Setting			f_{SYS}	f_H	f_{SUB}	f_{LIRC}
		FHIDEN	FSIDEN	CKS2~CKS0				
FAST	On	x	x	000~110	f_H~f_H/64	On	On	On
SLOW	On	x	x	111	f_{SUB}	On/Off (1)	On	On
IDLE0	Off	0	1	000~110	Off	Off	On	On
				111	On			
IDLE1	Off	1	1	xxx	On	On	On	On
IDLE2	Off	1	0	000~110	On	On	Off	On
				111	Off			
SLEEP	Off	0	0	xxx	Off	Off	Off	On/Off (2)

"x": Don't care

Note: 1. The f_H clock will be switched on or off by configuring the corresponding oscillator enable bit in the SLOW mode.

2. The f_{LIRC} clock can be switched on or off which is controlled by the WDT function being enabled or disabled in the SLEEP mode.

FAST Mode

This is one of the main operating modes where the microcontrollers have all of their functions operational and where the system clock is provided by the high speed oscillator. This mode operates allowing the microcontrollers to operate normally with a clock source which will come from the high speed oscillator, HIRC. The high speed oscillator will however first be divided by a ratio ranging from 1 to 64, the actual ratio being selected by the CKS2~CKS0 bits in the SCC register. Although a high speed oscillator is used, running the microcontrollers at a divided clock ratio reduces the operating current.

SLOW Mode

This is also a mode where the microcontroller operates normally although now with a slower speed clock source. The clock source used will be from f_{SUB}, which is derived from the LIRC oscillator.

SLEEP Mode

The SLEEP Mode is entered when a HALT instruction is executed and when the FHIDEN and FSIDEN bits are low. In the SLEEP mode the CPU will be stopped, and the f_{SUB} clock to peripheral will be stopped too. However the f_{LIRC} clock will continue to operate if the WDT function is enabled by the WDTC register.

IDLE0 Mode

The IDLE0 Mode is entered when an HALT instruction is executed and when the FHIDEN bit in the SCC register is low and the FSIDEN bit in the SCC register is high. In the IDLE0 Mode the CPU will be switched off but the low speed oscillator will be turned on to drive some peripheral functions.

IDLE1 Mode

The IDLE1 Mode is entered when an HALT instruction is executed and when the FHIDEN bit in the SCC register is high and the FSIDEN bit in the SCC register is high. In the IDLE1 Mode the CPU will be switched off but both the high and low speed oscillators will be turned on to provide a clock source to keep some peripheral functions operational.

IDLE2 Mode

The IDLE2 Mode is entered when an HALT instruction is executed and when the FHIDEN bit in the SCC register is high and the FSIDEN bit in the SCC register is low. In the IDLE2 Mode the CPU will be switched off but the high speed oscillator will be turned on to provide a clock source to keep some peripheral functions operational.

Control Register

The SCC and HIRCC registers are used to control the system clock and the oscillator configurations.

Register Name	Bit							
	7	6	5	4	3	2	1	0
SCC	CKS2	CKS1	CKS0	—	—	—	FHIDEN	FSIDEN
HIRCC	—	—	—	—	HIRC1	HIRC0	HIRCF	HIRCEN

• **SCC Register**

Bit	7	6	5	4	3	2	1	0
Name	CKS2	CKS1	CKS0	—	—	—	FHIDEN	FSIDEN
R/W	R/W	R/W	R/W	—	—	—	R/W	R/W
POR	0	0	0	—	—	—	0	0

Bit 7~5 **CKS2~CKS0**: System clock selection
000: f_H
001: $f_H/2$
010: $f_H/4$
011: $f_H/8$
100: $f_H/16$
101: $f_H/32$
110: $f_H/64$
111: f_{SUB}

These three bits are used to select which clock is used as the system clock source. In addition to the system clock source directly derived from f_H or f_{SUB}, a divided version of the high speed system oscillator can also be chosen as the system clock source.

Bit 4~2 Unimplemented, read as "0"

Bit 1 **FHIDEN**: High Frequency oscillator control when CPU is switched off
0: Disable
1: Enable

This bit is used to control whether the high speed oscillator is activated or stopped when the CPU is switched off by executing an "HALT" instruction.

Bit 0 **FSIDEN**: Low Frequency oscillator control when CPU is switched off
0: Disable
1: Enable

This bit is used to control whether the low speed oscillator is activated or stopped when the CPU is switched off by executing an "HALT" instruction.

Note: A certain delay is required before the relevant clock is successfully switched to the target clock source after any clock switching setup using the CKS2~CKS0 bits. A proper delay time must be arranged before executing the following operations which require immediate reaction with the target clock source.

Clock switching delay time = $4\times t_{SYS}+[0\sim(1.5\times t_{Curr.}+0.5\times t_{Tar.})]$, where $t_{Curr.}$ indicates the current clock period, $t_{Tar.}$ indicates the target clock period and the t_{SYS} indicates the current system clock period.

• **HIRCC Register**

Bit	7	6	5	4	3	2	1	0
Name	—	—	—	—	HIRC1	HIRC0	HIRCF	HIRCEN
R/W	—	—	—	—	R/W	R/W	R	R/W
POR	—	—	—	—	0	0	0	1

Bit 7~4 Unimplemented, read as "0"

Bit 3~2 **HIRC1~HIRC0**: HIRC frequency selection
00: 8MHz
01: 12MHz
10: 16MHz
11: 8MHz

When the HIRC oscillator is enabled or the HIRC frequency selection is changed by the application program, the HIRC frequency is changed by changing these two bits, the clock frequency will automatically be changed after the HIRCF flag is set to 1.

It is recommended that the HIRC frequency selected by these two bits should be the same with the frequency determined by the configuration options to achieve the HIRC frequency accuracy specified in the A.C. Characteristics.

Bit 1 **HIRCF**: HIRC oscillator stable flag
0: HIRC unstable
1: HIRC stable
This bit is used to indicate whether the HIRC oscillator is stable or not. When the HIRCEN bit is set to 1 to enable the HIRC oscillator or the HIRC frequency selection is changed by the application program, the HIRCF bit will first be cleared to 0 and then set to 1 after the HIRC oscillator is stable.

Bit 0 **HIRCEN**: HIRC oscillator enable control
0: Disable
1: Enable

Operating Mode Switching

The device can switch between operating modes dynamically allowing the user to select the best performance/power ratio for the present task in hand. In this way microcontroller operations that do not require high performance can be executed using slower clocks thus requiring less operating current and prolonging battery life in portable applications.

In simple terms, mode switching between the FAST Mode and SLOW Mode is executed using the CKS2~CKS0 bits in the SCC register while mode switching from the FAST/SLOW Modes to the SLEEP/IDLE Modes is executed via the HALT instruction. When an HALT instruction is executed, whether the device enters the IDLE Mode or the SLEEP Mode is determined by the condition of the FHIDEN and FSIDEN bits in the SCC register.

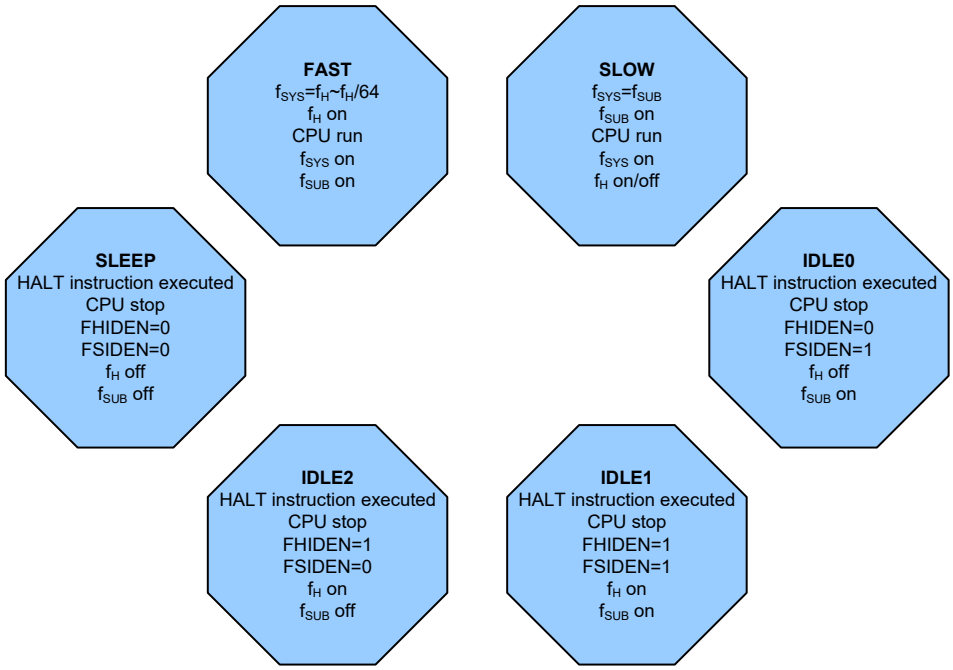

FAST Mode to SLOW Mode Switching

When running in the FAST Mode, which uses the high speed system oscillator, and therefore consumes more power, the system clock can switch to run in the SLOW Mode by set the CKS2~CKS0 bits to “111” in the SCC register. This will then use the low speed system oscillator which will consume less power. Users may decide to do this for certain operations which do not require high performance and can subsequently reduce power consumption.

The SLOW Mode system clock is sourced from the LIRC oscillator and therefore requires this oscillator to be stable before full mode switching occurs.

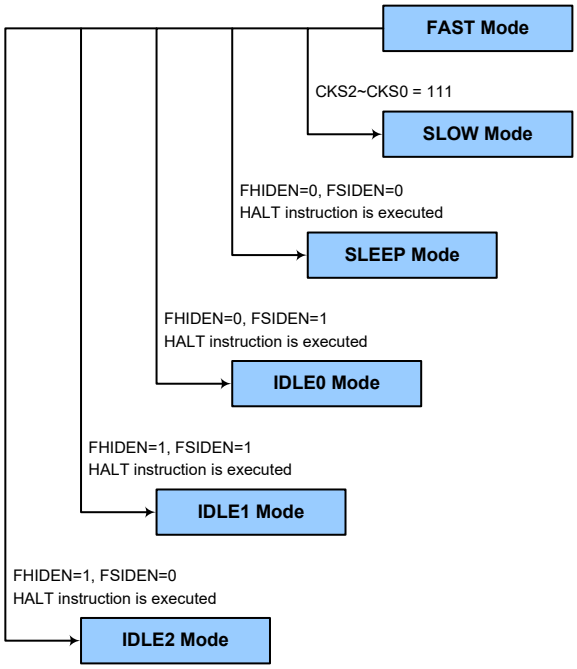

SLOW Mode to FAST Mode Switching

In the SLOW mode the system clock is derived from f_{SUB}. When system clock is switched back to the FAST mode from f_{SUB}, the CKS2~CKS0 bits should be set to "000"~"110" and then the system clock will respectively be switched to f_H~f_H/64.

However, if f_H is not used in the SLOW mode and thus switched off, it will take some time to re-oscillate and stabilise when switching to the FAST mode from the SLOW Mode. This is monitored using the HIRCF bit in the HIRCC register. The time duration required for the high speed system oscillator stabilisation is specified in the System Start Up Time Characteristics.

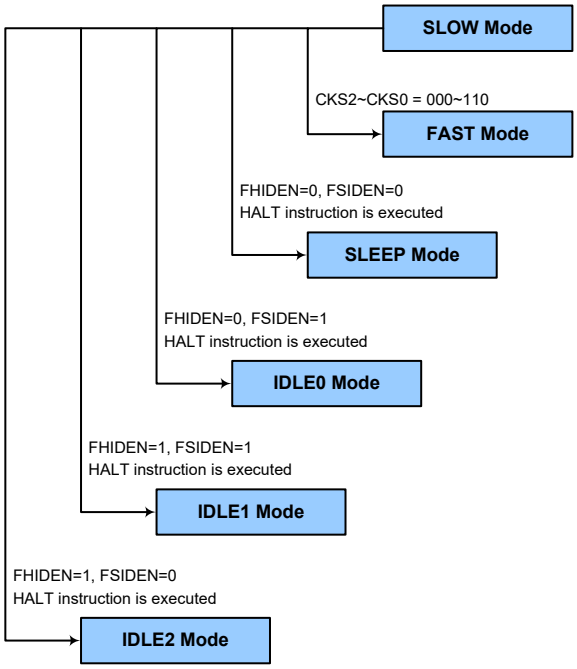

Entering the SLEEP Mode

There is only one way for the device to enter the SLEEP Mode and that is to execute the "HALT" instruction in the application program with both the FHIDEN and FSIDEN bits in the SCC register equal to "0". In this mode all the clocks and functions will be switched off except the WDT function. When this instruction is executed under the conditions described above, the following will occur:

- The system clock will be stopped and the application program will stop at the "HALT" instruction.
- The Data Memory contents and registers will maintain their present condition.
- The I/O ports will maintain their present conditions.
- In the status register, the Power Down flag, PDF, will be set and the Watchdog time-out flag, TO, will be cleared.
- The WDT will be cleared and resume counting if the WDT function is enabled. If the WDT function is disabled, the WDT will be cleared and then stopped.

Entering the IDLE0 Mode

There is only one way for the device to enter the IDLE0 Mode and that is to execute the "HALT" instruction in the application program with the FHIDEN bit in the SCC register equal to "0" and the FSIDEN bit in the SCC register equal to "1". When this instruction is executed under the conditions described above, the following will occur:

- The f_H clock will be stopped and the application program will stop at the "HALT" instruction, but the f_{SUB} clock will be on.
- The Data Memory contents and registers will maintain their present condition.
- The I/O ports will maintain their present conditions.
- In the status register, the Power Down flag, PDF, will be set and the Watchdog time-out flag, TO, will be cleared.
- The WDT will be cleared and resume counting if the WDT function is enabled. If the WDT function is disabled, the WDT will be cleared and then stopped.

Entering the IDLE1 Mode

There is only one way for the device to enter the IDLE1 Mode and that is to execute the "HALT" instruction in the application program with both the FHIDEN and FSIDEN bits in the SCC register equal to "1". When this instruction is executed under the conditions described above, the following will occur:

- The f_H and f_{SUB} clocks will be on but the application program will stop at the "HALT" instruction.
- The Data Memory contents and registers will maintain their present condition.
- The I/O ports will maintain their present conditions.
- In the status register, the Power Down flag, PDF, will be set and the Watchdog time-out flag, TO, will be cleared.
- The WDT will be cleared and resume counting if the WDT function is enabled. If the WDT function is disabled, the WDT will be cleared and then stopped.

Entering the IDLE2 Mode

There is only one way for the device to enter the IDLE2 Mode and that is to execute the "HALT" instruction in the application program with the FHIDEN bit in the SCC register equal to "1" and the FSIDEN bit in the SCC register equal to "0". When this instruction is executed under the conditions described above, the following will occur:

- The f_H clock will be on but the f_{SUB} clock will be off and the application program will stop at the "HALT" instruction.

- The Data Memory contents and registers will maintain their present condition.
- The I/O ports will maintain their present conditions.
- In the status register, the Power Down flag, PDF, will be set and the Watchdog time-out flag, TO, will be cleared.
- The WDT will be cleared and resume counting if the WDT function is enabled. If the WDT function is disabled, the WDT will be cleared and then stopped

Standby Current Considerations

As the main reason for entering the SLEEP or IDLE Mode is to keep the current consumption of the device to as low a value as possible, perhaps only in the order of several micro-amps except in the IDLE1 and IDLE2 Mode, there are other considerations which must also be taken into account by the circuit designer if the power consumption is to be minimised. Special attention must be made to the I/O pins on the device. All high-impedance input pins must be connected to either a fixed high or low level as any floating input pins could create internal oscillations and result in increased current consumption. This also applies to the device which has different package types, as there may be unbonded pins. These must either be set as outputs or if set as inputs must have pull-high resistors connected. In addition, the I/O pin-shared with VPP must not be set to output high, as this could result in increased current consumption.

Care must also be taken with the loads, which are connected to I/O pins, which are set as outputs. These should be placed in a condition in which minimum current is drawn or connected only to external circuits that do not draw current, such as other CMOS inputs. Also note that additional standby current will also be required if the LIRC oscillator has enabled.

In the IDLE1 and IDLE2 Mode the high speed oscillator is on, if the peripheral function clock source is derived from the high speed oscillator, the additional standby current will also be perhaps in the order of several hundred micro-amps.

Wake-up

To minimise power consumption the device can enter the SLEEP or any IDLE Mode, where the CPU will be switched off. However, when the device is woken up again, it will take a considerable time for the original system oscillator to restart, stabilise and allow normal operation to resume.

After the system enters the SLEEP or IDLE Mode, it can be woken up from one of various sources listed as follows:

- An external falling edge on Port A
- An external $\overline{\text{RES}}$ pin reset
- A system interrupt
- A WDT overflow

When the device executes the “HALT” instruction, it will enter the IDLE or SLEEP mode and the PDF flag will be set to 1. The PDF flag will be cleared to 0 if the device experiences a system power-up or executes the clear Watchdog Timer instruction.

If the system is woken up by an external $\overline{\text{RES}}$ pin reset, the device will experience a full system reset, however, if the device is woken up by a WDT overflow, a Watchdog Timer reset will be initiated. Although both of these wake-up methods will initiate a reset operation, the actual source of the wake-up can be determined by examining the TO and PDF flag. The PDF flag is cleared by a system power-up or executing the clear Watchdog Timer instructions and is set when executing the “HALT” instruction. The TO flag is set if a WDT time-out occurs and causes a wake-up that only resets the Program Counter and Stack Pointer, other flags remain in their original status.

Each pin on Port A can be set using the PAWU register to permit a negative transition on the pin to wake-up the system. When a pin wake-up occurs, the program will resume execution at the instruction following the "HALT" instruction. If the system is woken up by an interrupt, then two possible situations may occur. The first is where the related interrupt is disabled or the interrupt is enabled but the stack is full, in which case the program will resume execution at the instruction following the "HALT" instruction. In this situation, the interrupt which woke-up the device will not be immediately serviced, but will rather be serviced later when the related interrupt is finally enabled or when a stack level becomes free. The other situation is where the related interrupt is enabled and the stack is not full, in which case the regular interrupt response takes place. If an interrupt request flag is set high before entering the SLEEP or IDLE Mode, the wake-up function of the related interrupt will be disabled.

Watchdog Timer

The Watchdog Timer is provided to prevent program malfunctions or sequences from jumping to unknown locations, due to certain uncontrollable external events such as electrical noise.

Watchdog Timer Clock Source

The Watchdog Timer clock source is provided by the internal clock, f_{LIRC} which is sourced from the LIRC oscillator. The LIRC internal oscillator has an approximate frequency of 32kHz and this specified internal clock period can vary with V_{DD}, temperature and process variations. The Watchdog Timer source clock is then subdivided by a ratio of 2^8~2^{18} to give longer timeouts, the actual value being chosen using the WS2~WS0 bits in the WDTC register.

Watchdog Timer Control Register

A single register, WDTC, controls the required time-out period as well as the enable/disable and reset MCU operation.

- **WDTC Register**

Bit	7	6	5	4	3	2	1	0
Name	WE4	WE3	WE2	WE1	WE0	WS2	WS1	WS0
R/W	R/W	R/W	R/W	R/W	R/W	R/W	R/W	R/W
POR	0	1	0	1	0	0	1	1

Bit 7~3 **WE4~WE0**: WDT function software control
10101: Disable
01010: Enable
Other values: Reset MCU

When these bits are changed by the environmental noise or software setting to reset the microcontroller, the reset operation will be activated after a delay time, t_{SRESET} and the WRF bit in the RSTFC register will be set high.

Bit 2~0 **WS2~WS0**: WDT time-out period selection
000: $2^8/f_{LIRC}$
001: $2^{10}/f_{LIRC}$
010: $2^{12}/f_{LIRC}$
011: $2^{14}/f_{LIRC}$
100: $2^{15}/f_{LIRC}$
101: $2^{16}/f_{LIRC}$
110: $2^{17}/f_{LIRC}$
111: $2^{18}/f_{LIRC}$

These three bits determine the division ratio of the watchdog timer source clock, which in turn determines the time-out period.

• **RSTFC Register**

Bit	7	6	5	4	3	2	1	0
Name	—	—	—	—	RSTF	LVRF	LRF	WRF
R/W	—	—	—	—	R/W	R/W	R/W	R/W
POR	—	—	—	—	0	x	0	0

"x": Unknown

Bit 7~4 Unimplemented, read as "0"

Bit 3 **RSTF**: Reset control register software reset flag
Refer to Internal Reset Control section.

Bit 2 **LVRF**: LVR function reset flag
Refer to the Low Voltage Reset section.

Bit 1 **LRF**: LVR control register software reset flag
Refer to the Low Voltage Reset section.

Bit 0 **WRF**: WDTC register software reset flag
0: Not occurred
1: Occurred
This bit is set to 1 by the WDTC register software reset and cleared to zero by the application program. Note that this bit can be cleared to zero only by the application program.

Watchdog Timer Operation

The Watchdog Timer operates by providing a device reset when its timer overflows. This means that in the application program and during normal operation the user has to strategically clear the Watchdog Timer before it overflows to prevent the Watchdog Timer from executing a reset. This is done using the clear watchdog instruction. If the program malfunctions for whatever reason, jumps to an unknown location, or enters an endless loop, the clear instruction will not be executed in the correct manner, in which case the Watchdog Timer will overflow and reset the device. With regard to the Watchdog Timer enable/disable function, there are five bits, WE4~WE0, in the WDTC register to offer the enable/disable control of the Watchdog Timer and MCU software reset control. The WDT function will be enabled when the WE4~WE0 bits are set to a value of 01010B while the WDT function will be disabled if the WE4~WE0 bits are equal to 10101B. If the WE4~WE0 bits are set to any other values rather than 01010B and 10101B, it will reset the device after a delay time, t_{SRESET}. After power on these bits will have a value of 01010B.

WE4~WE0 Bits	WDT Function
10101B	Disable
01010B	Enable
Any other value	Reset MCU

Watchdog Timer Function Control

Under normal program operation, a Watchdog Timer time-out will initialise a device reset and set the status bit TO high. However, if the system is in the SLEEP or IDLE Mode, when a Watchdog Timer time-out occurs, the TO bit in the status register will be set high and only the Program Counter and Stack Pointer will be reset. Four methods can be adopted to clear the contents of the Watchdog Timer. The first is a WDTC software reset, which means a certain value except 01010B and 10101B written into the WE4~WE0 bits, the second is using the Watchdog Timer software clear instruction and the third is via a HALT instruction. The finally is an external hardware reset, which means a low level on the external reset pin.

There is only one method of using software instruction to clear the Watchdog Timer. That is to use the single "CLR WDT" instruction to clear the WDT.

The maximum time out period is when the 2^{18} division ratio is selected. As an example, with a 32kHz LIRC oscillator as its source clock, this will give a maximum watchdog period of around 8s for the 2^{18} division ratio, and a minimum timeout of 8ms for the 2^8 division ration.

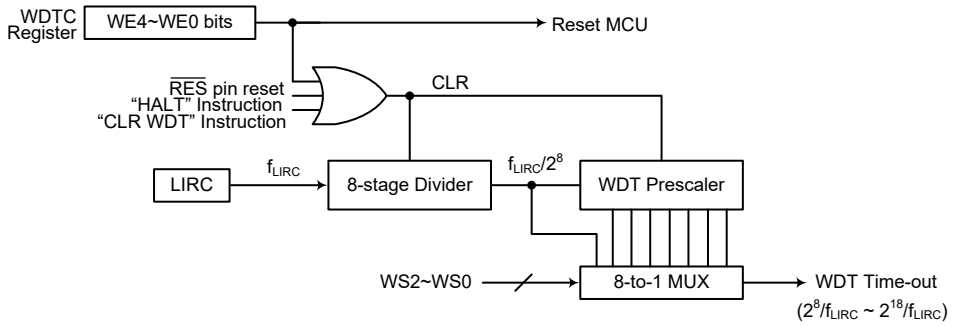

Watchdog Timer

Reset and Initialisation

A reset function is a fundamental part of any microcontroller ensuring that the device can be set to some predetermined condition irrespective of outside parameters. The most important reset condition is after power is first applied to the microcontrollers. In this case, internal circuitry will ensure that the microcontrollers, after a short delay, will be in a well-defined state and ready to execute the first program instruction. After this power-on reset, certain important internal registers will be set to defined states before the program commences. One of these registers is the Program Counter, which will be reset to zero forcing the microcontroller to begin program execution from the lowest Program Memory address.

In addition to the power-on reset, situations may arise where it is necessary to forcefully apply a reset condition when the device is running. One example of this is where after power has been applied and the device is already running, the $\overline{\text{RES}}$ line is forcefully pulled low. In such a case, known as a normal operation reset, some of the registers remain unchanged allowing the device to proceed with normal operation after the reset line is allowed to return high.

Another reset exists in the form of a Low Voltage Reset, LVR, where a full reset, similar to the $\overline{\text{RES}}$ reset is implemented in situations where the power supply voltage falls below a certain threshold. Another type of reset is when the Watchdog Timer overflows and resets the microcontroller. All types of reset operations result in different register conditions being setup.

Reset Functions

There are several ways in which a microcontroller reset can occur, through events occurring both internally and externally.

Power-on Reset

The most fundamental and unavoidable reset is the one that occurs after power is first applied to the microcontrollers. As well as ensuring that the Program Memory begins execution from the first memory address, a power-on reset also ensures that certain other registers are preset to known conditions. All the I/O port and port control registers will power up in a high condition ensuring that all pins will be first set to inputs.

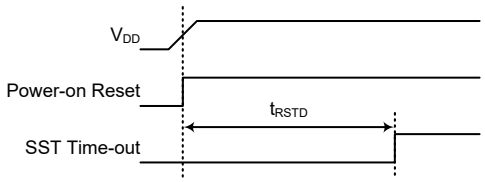

Power-on Reset Timing Chart

$\overline{\text{RES}}$ Pin Reset

As the reset pin is shared with an I/O pin, the reset function must be selected using a configuration option and a control register, RSTC. Although the microcontroller has an internal RC reset function, if the V_{DD} power supply rise time is not fast enough or does not stabilise quickly at power-on, the internal reset function may be incapable of providing proper reset operation. For this reason it is recommended that an external RC network is connected to the $\overline{\text{RES}}$ pin, whose additional time delay will ensure that the $\overline{\text{RES}}$ pin remains low for an extended period to allow the power supply to stabilise. During this time delay, normal operation of the microcontroller will be inhibited. After the $\overline{\text{RES}}$ line reaches a certain voltage value, the reset delay time t_{RSTD} is invoked to provide an extra delay time after which the microcontroller will begin normal operation. The abbreviation SST in the figures stands for System Start-up Timer.

For most applications a resistor connected between VDD and the $\overline{\text{RES}}$ pin and a capacitor connected between VSS and the $\overline{\text{RES}}$ pin will provide a suitable external reset circuit. Any wiring connected to the $\overline{\text{RES}}$ pin should be kept as short as possible to minimise any stray noise interference.

For applications that operate within an environment where more noise is present the Enhanced Reset Circuit shown is recommended.

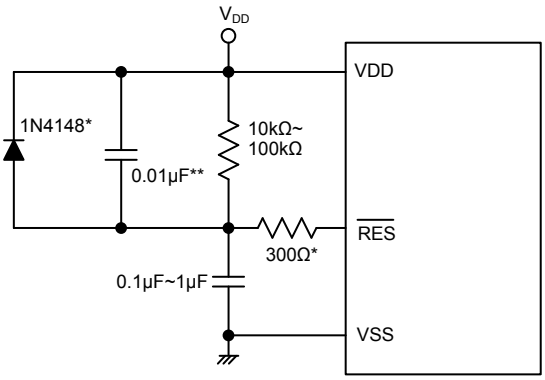

Note: * It is recommended that this component is added for added ESD protection.
** It is recommended that this component is added in environments where power line noise is significant.

External $\overline{\text{RES}}$ Circuit

Pulling the $\overline{\text{RES}}$ pin low using external hardware will also execute a device reset. In this case, as in the case of other resets, the Program Counter will reset to zero and program execution initiated from this point.

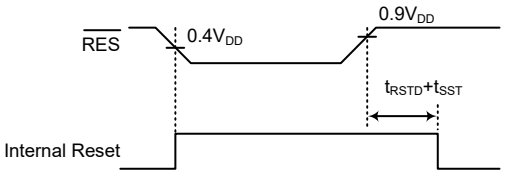

$\overline{\text{RES}}$ Reset Timing Chart

There is an internal reset control register, RSTC, which is used to select the external $\overline{RES}$ pin function and provide a reset when the device operates abnormally due to the environmental noise interference. If the content of the RSTC register is set to any value other than 01010101B or 10101010B, it will reset the device after a delay time, t_{SRESET}. After power on the register will have a value of 01010101B.

I/O or $\overline{RES}$ Pin Configuration Option	RSTC7~RSTC0 Bits	Function Description
Always I/O	01010101B or 10101010B	PC2 or other pin-shared functions
	Any other value	Reset MCU
Always $\overline{RES}$	01010101B or 10101010B	$\overline{RES}$ pin
	Any other value	Reset MCU
Controlled by RSTC register	01010101B	PC2 or other pin-shared functions
	10101010B	$\overline{RES}$ pin
	Any other value	Reset MCU

Internal Reset Function Control

- **RSTC Register**

Bit	7	6	5	4	3	2	1	0
Name	RSTC7	RSTC6	RSTC5	RSTC4	RSTC3	RSTC2	RSTC1	RSTC0
R/W	R/W	R/W	R/W	R/W	R/W	R/W	R/W	R/W
POR	0	1	0	1	0	1	0	1

Bit 7~0 **RSTC7~RSTC0**: Reset function control

If "Always I/O" is set by the configuration option:
01010101B or 10101010B: PC2 or other pin-shared functions
Other values: Reset MCU

If "Always $\overline{RES}$" is set by the configuration option:
01010101B or 10101010B: $\overline{RES}$ pin
Other values: Reset MCU

If "Controlled by RSTC register" is set by the configuration option:
01010101B: PC2 or other pin-shared functions
10101010B: $\overline{RES}$ pin

The RSTC7~RSTC0 bits setup is determined by the configuration option selection.

When these bits are changed to any other values except 01010101B and 10101010B due to environmental noise, the microcontroller will be reset. The reset operation will be activated after a delay time, t_{SRESET} and the RSTF bit in the RSTFC register will be set to 1.

All resets will reset this register to POR value except the WDT time out hardware warm reset. Note that when this register is set to 10101010B to select the $\overline{RES}$ pin function, this configuration has higher priority than other related pin-shared controls.

- **RSTFC Register**

Bit	7	6	5	4	3	2	1	0
Name	—	—	—	—	RSTF	LVRF	LRF	WRF
R/W	—	—	—	—	R/W	R/W	R/W	R/W
POR	—	—	—	—	0	x	0	0

"x": Unknown

Bit 7~4 Unimplemented, read as "0"

Bit 3 **RSTF**: Reset control register software reset flag
0: Not occurred
1: Occurred

This bit is set high by the RSTC control register software reset and cleared to zero by the application program. Note that this bit can only be cleared to 0 by the application program.

Bit 2 **LVRF**: LVR function reset flag
Described elsewhere.

Bit 1 **LRF**: LVR control register software reset flag
Described elsewhere.

Bit 0 **WRF**: WDT control register software reset flag
Described elsewhere.

Low Voltage Reset – LVR

The microcontroller contains a low voltage reset circuit in order to monitor the supply voltage of the device and provides an MCU reset should the value fall below a certain predefined level. The LVR function can be enabled or disabled by the LVRC control register. If the LVRC control register is configured to enable the LVR function, the LVR function will be always enabled in the FAST or SLOW mode with a specific LVR voltage V_{LVR}. If the supply voltage of the device drops to within a range of 0.9V~V_{LVR} such as might occur when changing the battery, the LVR will automatically reset the device internally and the LVRF bit in the RSTFC register will also be set to 1. For a valid LVR signal, a low supply voltage, i.e., a voltage in the range between 0.9V~V_{LVR} must exist for a time greater than that specified by t_{LVR} in the LVR/LVD Electrical Characteristics. If the duration of the low supply voltage state does not exceed this value, the LVR will ignore the low supply voltage and will not perform a reset function. The actual t_{LVR} value can be selected by the TLVR1~TLVR0 bits in the TLVRC register. The actual V_{LVR} value can be selected by the LVS bits in the LVRC register. If the LVS7~LVS0 bits have any other values, which may perhaps occur due to adverse environmental conditions such as noise, the LVR will reset the device after a delay time, t_{SRESET}. When this happens, the LRF bit in the RSTFC register will be set to 1. After power on the register will have the value of 01100110B. Note that the LVR function will be automatically disabled when the device enters the SLEEP/IDLE mode.

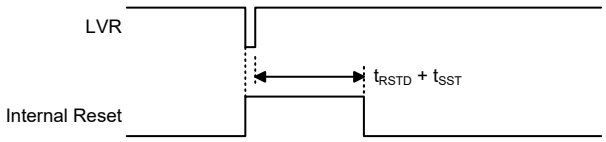

Low Voltage Reset Timing Chart

- **LVRC Register**

Bit	7	6	5	4	3	2	1	0
Name	LVS7	LVS6	LVS5	LVS4	LVS3	LVS2	LVS1	LVS0
R/W	R/W	R/W	R/W	R/W	R/W	R/W	R/W	R/W
POR	0	1	1	0	0	1	1	0

Bit 7~0 **LVS7~LVS0**: LVR voltage selection
01100110: 1.7V
01010101: 1.9V
00110011: 2.55V
10011001: 3.15V
10101010: 3.8V
11110000: LVR disable
Any other value: Generates MCU reset – register is reset to POR value

When an actual low voltage condition occurs, as specified by one of the five defined LVR voltage values above, an MCU reset will be generated. The reset operation will be activated after the low voltage condition keeps for greater than a t_{LVR} time. The actual

t_{LVR} value can be selected by the TLVR1~TLVR0 bits in the TLVRC register. In this situation the register contents will remain the same after such a reset occurs.

Any register value, other than 11110000B and the five defined LVR voltage values above, will also result in the generation of an MCU reset. The reset operation will be activated after a delay time, t_{SRESET}. However in this situation the register contents will be reset to the POR value.

- **TLVRC Register**

Bit	7	6	5	4	3	2	1	0
Name	—	—	—	—	—	—	TLVR1	TLVR0
R/W	—	—	—	—	—	—	R/W	R/W
POR	—	—	—	—	—	—	0	1

Bit 7~2 Unimplemented, read as "0"

Bit 1~0 **TLVR1~TLVR0**: Minimum low voltage width to reset time (t_{LVR}) selection
00: (7~8)×t_{LIRC}
01: (31~32)×t_{LIRC}
10: (63~64)×t_{LIRC}
11: (127~128)×t_{LIRC}

- **RSTFC Register**

Bit	7	6	5	4	3	2	1	0
Name	—	—	—	—	RSTF	LVRF	LRF	WRF
R/W	—	—	—	—	R/W	R/W	R/W	R/W
POR	—	—	—	—	0	x	0	0

"x": Unknown

Bit 7~4 Unimplemented, read as "0"

Bit 3 **RSTF**: Reset control register software reset flag
Refer to Internal Reset Control section.

Bit 2 **LVRF**: LVR function reset flag
0: Not occurred
1: Occurred
This bit is set high when a specific Low Voltage Reset situation condition occurs. This bit can only be cleared to zero by the application program.

Bit 1 **LRF**: LVR control register software reset flag
0: Not occurred
1: Occurred
This bit is set high if the LVRC register containing any non-defined LVR voltage register values. This in effect acts like a software reset function. This bit can only be cleared to zero by the application program.

Bit 0 **WRF**: WDTC register software reset flag
This bit is set to 1 by the WDTC register software reset and cleared to zero by the application program. Note that this bit can be cleared to zero only by the application program.

Watchdog Time-out Reset during Normal Operation

The Watchdog time-out Reset during normal operation in the FAST or SLOW Mode is the same as the hardware Low Voltage Reset except that the Watchdog time-out flag TO will be set to "1".

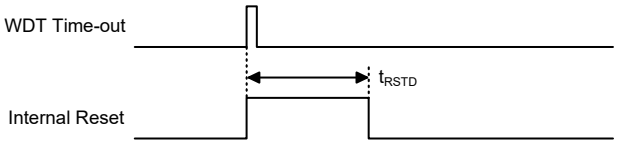

WDT Time-out Reset during Normal Operation Timing Chart

Watchdog Time-out Reset during SLEEP or IDLE Mode

The Watchdog time-out Reset during SLEEP or IDLE Mode is a little different from other kinds of reset. Most of the conditions remain unchanged except that the Program Counter and the Stack Pointer will be cleared to "0" and the TO and PDF flags will be set to "1". Refer to the System Start Up Time Characteristics for t_{SST} details.

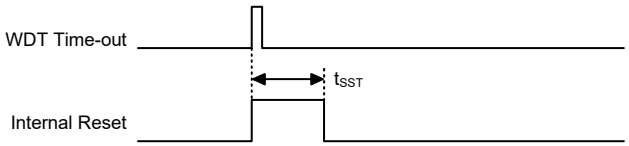

WDT Time-out Reset during SLEEP or IDLE Timing Chart

Reset Initial Conditions

The different types of reset described affect the reset flags in different ways. These flags, known as PDF and TO are located in the status register and are controlled by various microcontroller operations, such as the SLEEP or IDLE Mode function or Watchdog Timer. The reset flags are shown in the table:

TO	PDF	Reset Conditions
0	0	Power-on reset
u	u	$\overline{\text{RES}}$ or LVR reset during FAST or SLOW Mode operation
1	u	WDT time-out reset during FAST or SLOW Mode operation
1	1	WDT time-out reset during IDLE or SLEEP Mode operation

"u" stands for unchanged

The following table indicates the way in which the various components of the microcontroller are affected after a power-on reset occurs.

Item	Condition After Reset
Program Counter	Reset to zero
Interrupts	All interrupts will be disabled
WDT, Time Base	Cleared after reset, WDT begins counting
Timer/Event Counter	Timer/Event Counter will be turned off
Input/Output Ports	I/O ports will be set as inputs
Stack Pointer	Stack Pointer will point to the top of the stack

The different kinds of resets all affect the internal registers of the microcontroller in different ways. To ensure reliable continuation of normal program execution after a reset occurs, it is important to know what condition the microcontroller is in after a particular reset occurs. The following table describes how each type of reset affects each of the microcontroller internal registers.

Register	Reset (Power On)	$\overline{\text{RES}}$ Reset (Normal Operation)	WDT Time-out (Normal Operation)	WDT Time-out (IDLE/SLEEP)*
IAR0	0000 0000	0000 0000	0000 0000	uuuu uuuu
MP0	0000 0000	0000 0000	0000 0000	uuuu uuuu
IAR1	0000 0000	0000 0000	0000 0000	uuuu uuuu
MP1L	0000 0000	0000 0000	0000 0000	uuuu uuuu
MP1H	0000 0000	0000 0000	0000 0000	uuuu uuuu
ACC	xxxx xxxx	uuuu uuuu	uuuu uuuu	uuuu uuuu
PCL	0000 0000	0000 0000	0000 0000	0000 0000
TBLP	xxxx xxxx	uuuu uuuu	uuuu uuuu	uuuu uuuu
TBLH	xxxx xxxx	uuuu uuuu	uuuu uuuu	uuuu uuuu
TBHP	---- xxxx	---- uuuu	---- uuuu	---- uuuu

Register	Reset (Power On)	$\overline{\text{RES}}$ Reset (Normal Operation)	WDT Time-out (Normal Operation)	WDT Time-out (IDLE/SLEEP)*
STATUS	xx00 xxxx	uuuu uuuu	uu1u uuuu	uu11 uuuu
IAR2	0000 0000	0000 0000	0000 0000	uuuu uuuu
MP2L	0000 0000	0000 0000	0000 0000	uuuu uuuu
MP2H	0000 0000	0000 0000	0000 0000	uuuu uuuu
RSTFC	---- 0x00	---- uuuu	---- uuuu	---- uuuu
INTC0	-000 0000	-000 0000	-000 0000	-uuu uuuu
INTC1	0000 0000	0000 0000	0000 0000	uuuu uuuu
INTC2	--00 --00	--00 --00	--00 --00	--uu --uu
INTEG	---- 0000	---- 0000	---- 0000	---- uuuu
PA	1111 1111	1111 1111	1111 1111	uuuu uuuu
PAC	1111 1111	1111 1111	1111 1111	uuuu uuuu
PAPU	0000 0000	0000 0000	0000 0000	uuuu uuuu
PAWU	0000 0000	0000 0000	0000 0000	uuuu uuuu
PB	-111 1111	-111 1111	-111 1111	-uuu uuuu
PBC	-111 1111	-111 1111	-111 1111	-uuu uuuu
PBPU	-000 0000	-000 0000	-000 0000	-uuu uuuu
PC	---- -111	---- -111	---- -111	---- -uuu
PCC	---- -111	---- -111	---- -111	---- -uuu
PCPU	---- -000	---- -000	---- -000	---- -uuu
MFI0	0000 0000	0000 0000	0000 0000	uuuu uuuu
MFI1	0000 0000	0000 0000	0000 0000	uuuu uuuu
MFI2	--00 --00	--00 --00	--00 --00	--uu --uu
TB0C	0--- -000	0--- -000	0--- -000	u--- -uuu
TB1C	0--- -000	0--- -000	0--- -000	u--- -uuu
PSC0R	---- --00	---- --00	---- --00	---- --uu
PSC1R	---- --00	---- --00	---- --00	---- --uu
SADC0	0000 0000	0000 0000	0000 0000	uuuu uuuu
SADC1	0000 0000	0000 0000	0000 0000	uuuu uuuu
SADOL	xxxx ----	xxxx ----	xxxx ----	uuuu ---- (ADRFS=0)
	xxxx xxxx	xxxx xxxx	xxxx xxxx	uuuu uuuu (ADRFS=1)
SADOH	xxxx xxxx	xxxx xxxx	xxxx xxxx	uuuu uuuu (ADRFS=0)
	---- xxxx	---- xxxx	---- xxxx	---- uuuu (ADRFS=1)
OCR	---- 00--	---- 00--	---- 00--	---- uu--
ODL	0000 0000	0000 0000	0000 0000	uuuu uuuu
ODH	0000 0000	0000 0000	0000 0000	uuuu uuuu
PWMC	0--- -000	0--- -000	0--- -000	u--- -uuu
PWMPL	0000 0000	0000 0000	0000 0000	uuuu uuuu
PWMPH	0000 0000	0000 0000	0000 0000	uuuu uuuu
PWMCL	0000 0000	0000 0000	0000 0000	uuuu uuuu
PWMCH	0000 0000	0000 0000	0000 0000	uuuu uuuu
PWM0DL	0000 0000	0000 0000	0000 0000	uuuu uuuu
PWM0DH	0000 0000	0000 0000	0000 0000	uuuu uuuu
PWM1DL	0000 0000	0000 0000	0000 0000	uuuu uuuu
PWM1DH	0000 0000	0000 0000	0000 0000	uuuu uuuu

Register	Reset (Power On)	$\overline{\text{RES}}$ Reset (Normal Operation)	WDT Time-out (Normal Operation)	WDT Time-out (IDLE/SLEEP)*
PWM2DL	0000 0000	0000 0000	0000 0000	uuuu uuuu
PWM2DH	0000 0000	0000 0000	0000 0000	uuuu uuuu
PWM3DL	0000 0000	0000 0000	0000 0000	uuuu uuuu
PWM3DH	0000 0000	0000 0000	0000 0000	uuuu uuuu
PWM4DL	0000 0000	0000 0000	0000 0000	uuuu uuuu
PWM4DH	0000 0000	0000 0000	0000 0000	uuuu uuuu
RSTC	0101 0101	0101 0101	0101 0101	uuuu uuuu
LVDC	0000 0000	0000 0000	0000 0000	uuuu uuuu
SCC	000- --00	000- --00	000- --00	uuu- --uu
HIRCC	---- 0001	---- 0001	---- 0001	---- uuuu
ORMC	0000 0000	0000 0000	0000 0000	0000 0000
TLVRC	---- --01	---- --01	---- --01	---- --uu
WDTC	0101 0011	0101 0011	0101 0011	uuuu uuuu
LVRC	0110 0110	0110 0110	0110 0110	uuuu uuuu
PTMC0	0000 0---	0000 0---	0000 0---	uuuu u---
PTMC1	0000 0000	0000 0000	0000 0000	uuuu uuuu
PTMC2	---- -000	---- -000	---- -000	---- -uuu
PTMDL	0000 0000	0000 0000	0000 0000	uuuu uuuu
PTMDH	0000 0000	0000 0000	0000 0000	uuuu uuuu
PTMAL	0000 0000	0000 0000	0000 0000	uuuu uuuu
PTMAH	0000 0000	0000 0000	0000 0000	uuuu uuuu
PTMBL	0000 0000	0000 0000	0000 0000	uuuu uuuu
PTMBH	0000 0000	0000 0000	0000 0000	uuuu uuuu
PTMRPL	0000 0000	0000 0000	0000 0000	uuuu uuuu
PTMRPH	0000 0000	0000 0000	0000 0000	uuuu uuuu
STMC0	0000 0000	0000 0000	0000 0000	uuuu uuuu
STMC1	0000 0000	0000 0000	0000 0000	uuuu uuuu
STMDL	0000 0000	0000 0000	0000 0000	uuuu uuuu
STMDH	---- --00	---- --00	---- --00	---- --uu
STMAL	0000 0000	0000 0000	0000 0000	uuuu uuuu
STMAH	---- --00	---- --00	---- --00	---- --uu
PAS0	0000 0000	0000 0000	0000 0000	uuuu uuuu
PAS1	0000 0000	0000 0000	0000 0000	uuuu uuuu
PBS0	0000 0000	0000 0000	0000 0000	uuuu uuuu
PBS1	--00 0000	--00 0000	--00 0000	--uu uuuu
IFS	0000 0000	0000 0000	0000 0000	uuuu uuuu
SLEDC0	1111 1111	1111 1111	1111 1111	uuuu uuuu
SLEDC1	---- --11	---- --11	---- --11	---- --uu

Note: “u” stands for unchanged
“x” stands for unknown
“-” stands for unimplemented

Input/Output Ports

Holtek microcontrollers offer considerable flexibility on their I/O ports. With the input or output designation of every pin fully under user program control, pull-high selections for all ports and wake-up selections on certain pins, the user is provided with an I/O structure to meet the needs of a wide range of application possibilities.

The device provides bidirectional input/output lines labeled with port names PA~PC. These I/O ports are mapped to the RAM Data Memory with specific addresses as shown in the Special Purpose Data Memory Structure diagram. All of these I/O ports can be used for input and output operations. For input operation, these ports are non-latching, which means the inputs must be ready at the T2 rising edge of instruction "MOV A, [m]", where m denotes the port address. For output operation, all the data is latched and remains unchanged until the output latch is rewritten.

Register Name	Bit							
	7	6	5	4	3	2	1	0
PA	PA7	PA6	PA5	PA4	PA3	PA2	PA1	PA0
PAC	PAC7	PAC6	PAC5	PAC4	PAC3	PAC2	PAC1	PAC0
PAPU	PAPU7	PAPU6	PAPU5	PAPU4	PAPU3	PAPU2	PAPU1	PAPU0
PAWU	PAWU7	PAWU6	PAWU5	PAWU4	PAWU3	PAWU2	PAWU1	PAWU0
PB	—	PB6	PB5	PB4	PB3	PB2	PB1	PB0
PBC	—	PBC6	PBC5*	PBC4*	PBC3	PBC2	PBC1	PBC0
PBPU	—	PBPU6	PBPU5**	PBPU4**	PBPU3	PBPU2	PBPU1	PBPU0
PC	—	—	—	—	—	PC2	PC1	PC0
PCC	—	—	—	—	—	PCC2	PCC1*	PCC0*
PCPU	—	—	—	—	—	PCPU2	PCPU1**	PCPU0**

"—": Unimplemented, read as "0"

I/O Logic Function Register List

Note: The control bit with an asterisk * should be cleared to 0 and the control bit with an asterisk ** should remain the POR value after power-on reset. This can set these unbonded and not internally used lines as outputs to prevent additional power consumption.

Pull-high Resistors

Many product applications require pull-high resistors for their switch inputs usually requiring the use of an external resistor. To eliminate the need for these external resistors, all I/O pins, when configured as a digital input have the capability of being connected to an internal pull-high resistor. These pull-high resistors are selected using the relevant pull-high control registers and are implemented using weak PMOS transistors.

Note that the pull-high resistor can be controlled by the relevant pull-high control register only when the pin-shared functional pin is selected as a digital input or NMOS output. Otherwise, the pull-high resistors cannot be enabled.

- **PxPU Register**

Bit	7	6	5	4	3	2	1	0
Name	PxPU7	PxPU6	PxPU5	PxPU4	PxPU3	PxPU2	PxPU1	PxPU0
R/W	R/W	R/W	R/W	R/W	R/W	R/W	R/W	R/W
POR	0	0	0	0	0	0	0	0

PxPUn: I/O Port x Pin pull-high function control
0: Disable
1: Enable

The PxPUn bit is used to control the pin pull-high function. Here the "x" can be A, B or C. However, the actual available bits for each I/O Port may be different.

Port A Wake-up

The HALT instruction forces the microcontroller into the SLEEP or IDLE Mode which preserves power, a feature that is important for battery and other low-power applications. Various methods exist to wake-up the microcontroller, one of which is to change the logic condition on one of the Port A pins from high to low. This function is especially suitable for applications that can be woken up via external switches. Each pin on Port A can be selected individually to have this wake-up feature using the PAWU register.

Note that the wake-up function can be controlled by the wake-up control registers only when the pin is selected as a general purpose input and the MCU enters the IDLE or SLEEP mode.

- **PAWU Register**

Bit	7	6	5	4	3	2	1	0
Name	PAWU7	PAWU6	PAWU5	PAWU4	PAWU3	PAWU2	PAWU1	PAWU0
R/W	R/W	R/W	R/W	R/W	R/W	R/W	R/W	R/W
POR	0	0	0	0	0	0	0	0

PAWUn: Port A Pin wake-up function control
0: Disable
1: Enable

I/O Port Control Registers

Each I/O port has its own control register known as PAC~PCC, to control the input/output configuration. With this control register, each CMOS output or input can be reconfigured dynamically under software control. Each pin of the I/O ports is directly mapped to a bit in its associated port control register. For the I/O pin to function as an input, the corresponding bit of the control register must be written as a “1”. This will then allow the logic state of the input pin to be directly read by instructions. When the corresponding bit of the control register is written as a “0”, the I/O pin will be set as a CMOS output. If the pin is currently set as an output, instructions can still be used to read the output register. However, it should be noted that the program will in fact only read the status of the output data latch and not the actual logic status of the output pin.

- **PxC Register**

Bit	7	6	5	4	3	2	1	0
Name	PxC7	PxC6	PxC5	PxC4	PxC3	PxC2	PxC1	PxC0
R/W	R/W	R/W	R/W	R/W	R/W	R/W	R/W	R/W
POR	1	1	1	1	1	1	1	1

PxCn: I/O Port A Pin type selection
0: Output
1: Input

The PxCn bit is used to control the pin type selection. Here the “x” can be A, B or C. However, the actual available bits for each I/O Port may be different.

Note that for the PA6~PA7 and PB0 lines, which are internally connected to the Linear Charger FN, SCL and SDA respectively, the corresponding control bits should be properly configured depending on the function that each line is actually used for internal connection. Set the line as an output or an input with pull-high if necessary.

I/O Port Source Current Control

Each pin in this device can be configured with different output source current which is selected by the corresponding source current selection bits. These source current selection bits are available when the corresponding pin is configured as a CMOS output. Otherwise, these select bits have no

effect. Users should refer to the Input/Output Characteristics section to obtain the exact value for different applications.

Register Name	Bit							
	7	6	5	4	3	2	1	0
SLEDC0	SLEDC07	SLEDC06	SLEDC05	SLEDC04	SLEDC03	SLEDC02	SLEDC01	SLEDC00
SLEDC1	—	—	—	—	—	—	SLEDC11	SLEDC10

Source Current Selection Register List

- **SLEDC0 Register**

Bit	7	6	5	4	3	2	1	0
Name	SLEDC07	SLEDC06	SLEDC05	SLEDC04	SLEDC03	SLEDC02	SLEDC01	SLEDC00
R/W	R/W	R/W	R/W	R/W	R/W	R/W	R/W	R/W
POR	0	0	0	0	0	0	0	0

Bit 7~6 **SLEDC07~SLEDC06**: PB6 source current selection
00: Source current = Level 0 (Min.)
01: Source current = Level 1
10: Source current = Level 2
11: Source current = Level 3 (Max.)

Bit 5~4 **SLEDC05~SLEDC04**: PB3~PB1 source current selection
00: Source current = Level 0 (Min.)
01: Source current = Level 1
10: Source current = Level 2
11: Source current = Level 3 (Max.)

Bit 3~2 **SLEDC03~SLEDC02**: PA5~PA4 source current selection
00: Source current = Level 0 (Min.)
01: Source current = Level 1
10: Source current = Level 2
11: Source current = Level 3 (Max.)

Bit 1~0 **SLEDC01~SLEDC00**: PA3~PA0 source current selection
00: Source current = Level 0 (Min.)
01: Source current = Level 1
10: Source current = Level 2
11: Source current = Level 3 (Max.)

- **SLEDC1 Register**

Bit	7	6	5	4	3	2	1	0
Name	—	—	—	—	—	—	SLEDC11	SLEDC10
R/W	—	—	—	—	—	—	R/W	R/W
POR	—	—	—	—	—	—	0	0

Bit 7~2 Unimplemented, read as “0”

Bit 1~0 **SLEDC11~SLEDC10**: PC2 source current selection
00: Source current = Level 0 (Min.)
01: Source current = Level 1
10: Source current = Level 2
11: Source current = Level 3 (Max.)

Pin-shared Functions

The flexibility of the microcontroller range is greatly enhanced by the use of pins that have more than one function. Limited numbers of pins can force serious design constraints on designers but by supplying pins with multi-functions, many of these difficulties can be overcome. For these pins, the desired function of the multi-function I/O pins is selected by a series of registers via the application program control.

Pin-shared Function Selection Registers

The limited number of supplied pins in a package can impose restrictions on the amount of functions a certain device can contain. However by allowing the same pins to share several different functions and providing a means of function selection, a wide range of different functions can be incorporated into even relatively small package sizes. The device includes a Port "x" output function selection register "n", labeled as PxSn, and Input Function Selection register, labeled as IFS, which can select the desired functions of the multi-function pin-shared pins.

The most important point to note is to make sure that the desired pin-shared function is properly selected and also deselected. For most pin-shared functions, to select the desired pin-shared function, the pin-shared function should first be correctly selected using the corresponding pin-shared control register. After that the corresponding peripheral functional setting should be configured and then the peripheral function can be enabled. However, a special point must be noted for the digital input pin, such as INT1, xTCK etc., which shares the same pin-shared control configuration with its corresponding general purpose I/O function when setting the relevant pin-shared control bit. To select this pin function, in addition to the necessary pin-shared control and peripheral functional setup aforementioned, it must also be set as an input by setting the corresponding bit in the I/O port control register. To correctly deselect the pin-shared function, the peripheral function should first be disabled and then the corresponding pin-shared function control register can be modified to select other pin-shared functions.

Register Name	Bit							
	7	6	5	4	3	2	1	0
PAS0	PAS07	PAS06	PAS05	PAS04	PAS03	PAS02	PAS01	PAS00
PAS1	PAS17	PAS16	PAS15	PAS14	PAS13	PAS12	PAS11	PAS10
PBS0	PBS07	PBS06	PBS05	PBS04	PBS03	PBS02	PBS01	PBS00
PBS1	—	—	PBS15	PBS14	D3	D2	D1	D0
IFS	INT1PS	D6	PTPI2PS	PTPI1PS	PTPI0PS	STPIPS	PTCKPS	STCKPS

Pin-shared Function Selection Register List

- **PAS0 Register**

Bit	7	6	5	4	3	2	1	0
Name	PAS07	PAS06	PAS05	PAS04	PAS03	PAS02	PAS01	PAS00
R/W	R/W	R/W	R/W	R/W	R/W	R/W	R/W	R/W
POR	0	0	0	0	0	0	0	0

Bit 7~6 **PAS07~PAS06**: PA3 Pin-Shared function selection
00: PA3/PTPI
01: PA3/PTPI
10: PA3/PTPI
11: PWM4O

Bit 5~4 **PAS05~PAS04**: PA2 Pin-Shared function selection
00: PA2
01: PA2
10: PA2
11: PWM3O

Bit 3~2 **PAS03~PAS02**: PA1 Pin-Shared function selection
00: PA1/PTPI
01: PA1/PTPI
10: PA1/PTPI
11: PWM2O

Bit 1~0 **PAS01~PAS00**: PA0 Pin-Shared function selection
00: PA0/STPI
01: PA0/STPI
10: PA0/STPI
11: STP

• **PAS1 Register**

Bit	7	6	5	4	3	2	1	0
Name	PAS17	PAS16	PAS15	PAS14	PAS13	PAS12	PAS11	PAS10
R/W	R/W	R/W	R/W	R/W	R/W	R/W	R/W	R/W
POR	0	0	0	0	0	0	0	0

Bit 7~6 **PAS17~PAS16**: PA7 Pin-Shared function selection
00: PA7
01: Reserved
10: Reserved
11: Reserved

Note that the PA7 line is internally connected to the Linear Charger SCL, these bit should be set to "00" to select the PA7 function when the two-line communication interface is used for communication between the MCU and Linear Charger.

Bit 5~4 **PAS15~PAS14**: PA6 Pin-Shared function selection
00: PA6
01: PA6
10: Reserved
11: AN5

Note that the PA6/AN5 line is internally connected to the Linear Charger FN, this bit should be properly configured depending on the FN output status and functions controlled by the internal communication, to select the AN5 function according to the requirements.

Bit 3~2 **PAS13~PAS12**: PA5 Pin-Shared function selection
00: PA5
01: PWM4OB
10: AN4
11: VREF

Bit 1~0 **PAS11~PAS10**: PA4 Pin-Shared function selection
00: PA4/PTPI/PTCK
01: PA4/PTPI/PTCK
10: PWM3OB
11: AN3

• **PBS0 Register**

Bit	7	6	5	4	3	2	1	0
Name	PBS07	PBS06	PBS05	PBS04	PBS03	PBS02	PBS01	PBS00
R/W	R/W	R/W	R/W	R/W	R/W	R/W	R/W	R/W
POR	0	0	0	0	0	0	0	0

Bit 7~6 **PBS07~PBS06**: PB3 Pin-Shared function selection
00: PB3
01: STP
10: Reserved
11: AN7

Bit 5~4 **PBS05~PBS04**: PB2 Pin-Shared function selection
00: PB2/PTPI/STCK
01: PB2/PTPI/STCK
10: PWM2OB
11: AN2

Bit 3~2 **PBS03~PBS02**: PB1 Pin-Shared function selection
00: PB1/PTPI/INT1
01: PB1/PTPI/INT1
10: PWM1OB
11: AN1

Bit 1~0 **PBS01~PBS00**: PB0 Pin-Shared function selection
00: PB0
01: PB0
10: Reserved
11: Reserved

Note that the PB0 line is internally connected to the Linear Charger SDA, these bits should be set to "00" or "01" to select the PB0 function when the two-line communication interface is used for communication between the MCU and Linear Charger.

- **PBS1 Register**

Bit	7	6	5	4	3	2	1	0
Name	—	—	PBS15	PBS14	D3	D2	D1	D0
R/W	—	—	R/W	R/W	R/W	R/W	R/W	R/W
POR	—	—	0	0	0	0	0	0

Bit 7~6 Unimplemented, read as "0"

Bit 5~4 **PBS15~PBS14**: PB6 Pin-Shared function selection
00: PB6
01: PB6
10: PWM0O
11: PTP

Bit 3~0 **D3~D0**: Reserved bits, should remain unchanged after power-on reset

- **IFS Register**

Bit	7	6	5	4	3	2	1	0
Name	INT1PS	D6	PTPI2PS	PTPI1PS	PTPI0PS	STPIPS	PTCKPS	STCKPS
R/W	R/W	R/W	R/W	R/W	R/W	R/W	R/W	R/W
POR	0	0	0	0	0	0	0	0

Bit 7 **INT1PS**: INT1 input source pin selection
0: PB1
1: Reserved

Bit 6 **D6**: Reserved bit, should remain unchanged after power-on reset

Bit 5~3 **PTPI2PS~PTPI0PS**: PTPI input source selection
000: PA7 line
001: PB0 line
010: PB1
011: PB2
100: PA4
101: PA3
110: PA1
111: PC2

Bit 2 **STPIPS**: STPI input source pin selection
0: PA0
1: Reserved

Bit 1 **PTCKPS**: PTCK input source pin selection
0: PA4
1: Reserved

Bit 0 **STCKPS**: STCK input source selection
0: PB2
1: PA6 line

I/O Pin Structure

The accompanying diagram illustrates the internal structure of the I/O logic function. As the exact logical construction of the I/O pin will differ from this drawing, it is supplied as a guide only to assist with the functional understanding of the I/O logic function. The wide range of pin-shared structures does not permit all types to be shown.

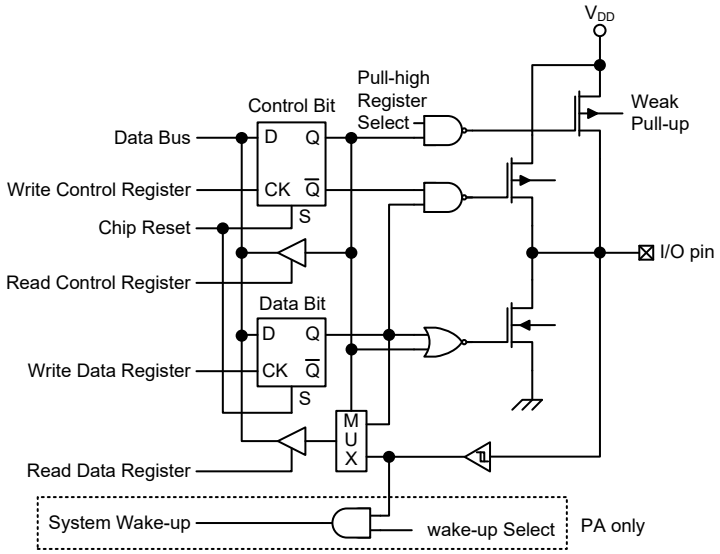

Logic Function Input/Output Structure

Programming Considerations

Within the user program, one of the first things to consider is port initialisation. After a reset, all of the I/O data and port control registers will be set high. This means that all I/O pins will default to an input state, the level of which depends on the other connected circuitry and whether pull-high selections have been chosen. If the port control registers are then programmed to set some pins as outputs, these output pins will have an initial high output value unless the associated port data registers are first programmed. Selecting which pins are inputs and which are outputs can be achieved byte-wide by loading the correct values into the appropriate port control register or by programming individual bits in the port control register using the “SET [m].i” and “CLR [m].i” instructions. Note that when using these bit control instructions, a read-modify-write operation takes place. The microcontroller must first read in the data on the entire port, modify it to the required new bit values and then rewrite this data back to the output ports.

Port A has the additional capability of providing wake-up function. When the device is in the SLEEP or IDLE Mode, various methods are available to wake the device up. One of these is a high to low transition of any of the Port A pins. Single or multiple pins on Port A can be set to have this function.

Timer Modules – TM

One of the most fundamental functions in any microcontroller device is the ability to control and measure time. To implement time related functions the device includes two Timer Modules, abbreviated to the name TM. The TMs are multi-purpose timing units and serves to provide operations such as Timer/Counter, Capture Input, Compare Match Output and Single Pulse Output as well as being the functional unit for the generation of PWM signals. Each of the TMs has two individual interrupts. The addition of input and output pins for the TM ensures that users are provided with timing units with a wide and flexible range of features.

The common features of the different TM types are described here with more detailed information provided in the individual Standard and Periodic Type TM sections.

Introduction

The device contains two TMs and each individual TM can be categorised as a certain type, namely Standard Type TM and Periodic Type TM. Although similar in nature, the different TM types vary in their feature complexity. The common features to all of the Standard and Periodic TMs will be described in this section and the detailed operation regarding each of the TM types will be described in separate sections. The main features and differences between the two types of TMs are summarised in the accompanying table.

TM Function	STM	PTM
Timer/Counter	√	√
Capture Input	√	√
Compare Match Output	√	√
PWM Output	√	√
Single Pulse Output	√	√
PWM Alignment	Edge	Edge
PWM Adjustment Period & Duty	Duty or Period	Duty or Period

TM Function Summary

TM Operation

The different types of TM offer a diverse range of functions, from simple timing operations to PWM signal generation. The key to understanding how the TM operates is to see it in terms of a free running counter whose value is then compared with the value of pre-programmed internal comparators. When the free running count-up counter has the same value as the pre-programmed comparator, known as a compare match situation, a TM interrupt signal will be generated which can clear the counter and perhaps also change the condition of the TM output pin. The internal TM counter is driven by a user selectable clock source, which can be an internal clock or an external pin.

TM Clock Source

The clock source which drives the main counter in each TM can originate from various sources. The selection of the required clock source is implemented using the xTCK2~xTCK0 bits in the xTM control registers, where “x” stands for S or P type TM. The clock source can be a ratio of the system clock, f_{SYS}, or the internal high clock, f_H, the f_{SUB} clock source or the external xTCK pin. The xTCK pin clock source is used to allow an external signal to drive the TM as an external clock source for event counting.

TM Interrupts

The Standard Type and Periodic Type TMs each have two internal interrupts, one for each of the internal comparator A or comparator P, which generate a TM interrupt when a compare match condition occurs. When a TM interrupt is generated it can be used to clear the counter and also to change the state of the TM output pin.

TM External Pins

Each of the TMs, irrespective of what type, has two TM input pins, with the label xTCK and xTPI. The xTM input pin, xTCK, is essentially a clock source for the xTMn and is selected using the xTCK2~xTCK0 bits in the xTMC0 register. This external TM input pin allows an external clock source to drive the internal TM. The xTCK input pin can be chosen to have either a rising or falling active edge. The xTCK pin is also used as the external trigger input pin in single pulse output mode for the xTM.

The other xTM input pin, xTPI, is the capture input whose active edge can be a rising edge, a falling edge or both rising and falling edges and the active edge transition type is selected using the xTIO1~xTIO0 bits in the xTMC1 register. There is another capture input, PTCK, for PTM capture input mode, which can be used as the external trigger input source except the PTPI pin.

The TMs each has one output pin, xTP. When the TM is in the Compare Match Output Mode, the xTP pin can be controlled by the xTM to switch to a high or low level or to toggle when a compare match situation occurs. The xTPB pin output is the inverted signal of the xTP. The xTP and xTPB output pins are also the pins where the TM generates the PWM output waveform.

As the TM input and output pins are pin-shared with other functions, the TM input and output functions must first be setup using the relevant pin-shared function selection bits described in the Pin-shared Function section. The details of the pin-shared function selection are described in the pin-shared function section.

STM		PTM	
Input	Output	Input	Output
STCK, STPI	STP	PTCK, PTPI	PTP

TM External Pins

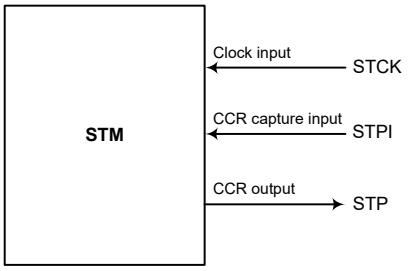

STM Function Pin Block Diagram

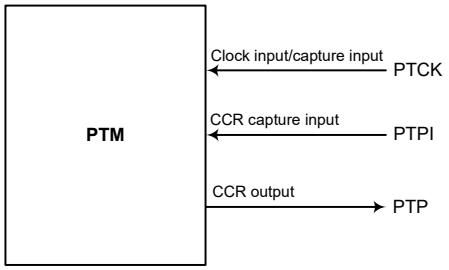

PTM Function Pin Block Diagram

Programming Considerations

The TM Counter Registers and the Capture/Compare CCRA and CCRP registers as well as the PTM CCRB registers, all have a low and high byte structure. The high bytes can be directly accessed, but as the low bytes can only be accessed via an internal 8-bit buffer, reading or writing to these register pairs must be carried out in a specific way. The important point to note is that data transfer to and from the 8-bit buffer and its related low byte only takes place when a write or read operation to its corresponding high byte is executed.

As the CCRA, CCRB and CCRP registers are implemented in the way shown in the following diagram and accessing these register pairs is carried out in a specific way as described above, it is recommended to use the "MOV" instruction to access the CCRA, CCRB and CCRP low byte registers, named xTMnAL, PTMBL, PTMRPL, using the following access procedures. Accessing the CCRA, CCRB or CCRP low byte register without following these access procedures will result in unpredictable values.

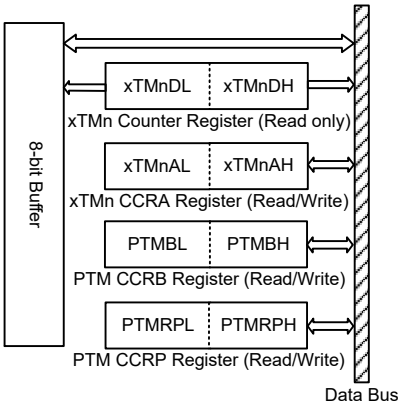

The following steps show the read and write procedures:

- Writing Data to CCRA, CCRB or CCRP
  - Step 1. Write data to Low Byte xTMnAL, PTMBL or PTMRPL
    - Note that here data is only written to the 8-bit buffer.
  - Step 2. Write data to High Byte xTMnAH, PTMBH or PTMRPH
    - Here data is written directly to the high byte registers and simultaneously data is latched from the 8-bit buffer to the Low Byte registers.
- Reading Data from the Counter Registers, CCRA, CCRB or CCRP
  - Step 1. Read data from the High Byte xTMnDH, xTMnAH, PTMBH or PTMRPH
    - Here data is read directly from the High Byte registers and simultaneously data is latched from the Low Byte register into the 8-bit buffer.
  - Step 2. Read data from the Low Byte xTMnDL, xTMnAL, PTMBL or PTMRPL
    - This step reads data from the 8-bit buffer.

Standard Type TM – STM

The Standard Type TM contains five operating modes, which are Compare Match Output, Timer/Event Counter, Capture Input, Single Pulse Output and PWM Output modes. The Standard TM can also be controlled with two external input pins and can drive one external output pin.

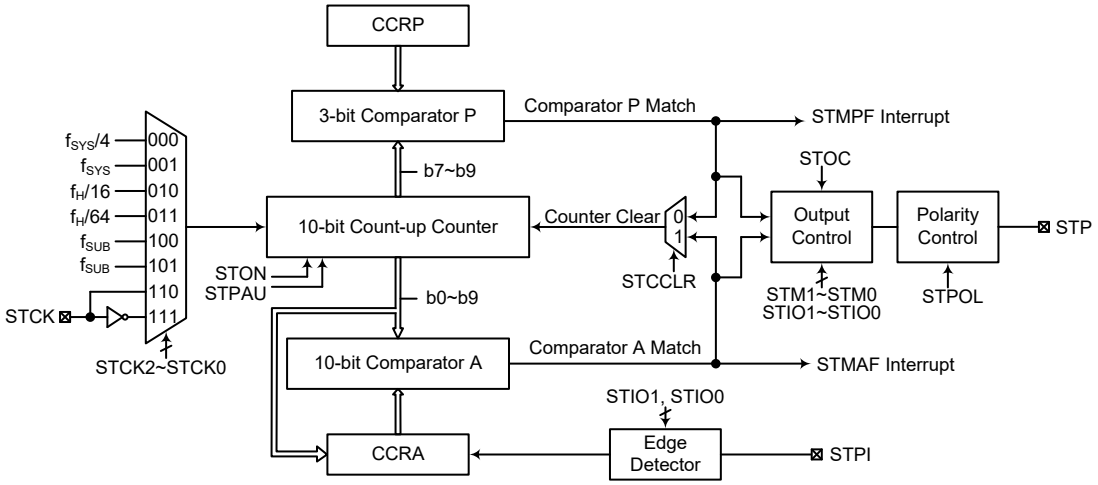

Note: The STM external pins are pin-shared with other functions, so before using the STM function, ensure that the relevant pin-shared function registers have been set properly to enable the STM pin function. The STCK and STPI pins, if used, must also be set as an input by setting the corresponding bits in the port control register.

10-bit Standard Type TM Block Diagram

Standard Type TM Operation

The size of Standard TM is 10-bit wide and its core is a 10-bit count-up counter which is driven by a user selectable internal or external clock source. There are also two internal comparators with the names, Comparator A and Comparator P. These comparators will compare the value in the counter with CCRP and CCRA registers. The CCRP comparator is 3-bit wide whose value is compared with the highest 3 bits in the counter while the CCRA is the ten bits and therefore compares all counter bits.

The only way of changing the value of the 10-bit counter using the application program, is to clear the counter by changing the STON bit from low to high. The counter will also be cleared automatically by a counter overflow or a compare match with one of its associated comparators. When these conditions occur, an STM interrupt signal will also usually be generated. The Standard Type TM can operate in a number of different operational modes, can be driven by different clock sources including an input pin and can also control the output pin. All operating setup conditions are selected using relevant internal registers.

Standard Type TM Register Description

Overall operation of the Standard TM is controlled using a series of registers. A read only register pair exists to store the internal counter 10-bit value, while a read/write register pair exists to store the internal 10-bit CCRA value. The remaining two registers are control registers which set the different operating and control modes as well as three CCRP bits.

Register Name	Bit							
	7	6	5	4	3	2	1	0
STMC0	STPAU	STCK2	STCK1	STCK0	STON	STRP2	STRP1	STRP0
STMC1	STM1	STM0	STIO1	STIO0	STOC	STPOL	STDPX	STCCLR
STMDL	D7	D6	D5	D4	D3	D2	D1	D0
STMDH	—	—	—	—	—	—	D9	D8
STMAL	D7	D6	D5	D4	D3	D2	D1	D0
STMAH	—	—	—	—	—	—	D9	D8

10-bit Standard TM Register List

- **STMC0 Register**

Bit	7	6	5	4	3	2	1	0
Name	STPAU	STCK2	STCK1	STCK0	STON	STRP2	STRP1	STRP0
R/W	R/W	R/W	R/W	R/W	R/W	R/W	R/W	R/W
POR	0	0	0	0	0	0	0	0

Bit 7 **STPAU**: STM counter pause control
0: Run
1: Pause

The counter can be paused by setting this bit high. Clearing the bit to zero restores normal counter operation. When in a Pause condition the STM will remain powered up and continue to consume power. The counter will retain its residual value when this bit changes from low to high and resume counting from this value when the bit changes to a low value again.

Bit 6~4 **STCK2~STCK0**: STM counter clock selection
000: $f_{SYS}/4$
001: f_{SYS}
010: $f_H/16$
011: $f_H/64$
100: f_{SUB}
101: f_{SUB}
110: STCK rising edge clock
111: STCK falling edge clock

These three bits are used to select the clock source for the STM. The external pin clock source can be chosen to be active on the rising or falling edge. The clock source f_{SYS} is the system clock, while f_H and f_{SUB} are other internal clocks, the details of which can be found in the Operating Modes and System Clocks section.

Bit 3 **STON**: STM counter on/off control
0: Off
1: On

This bit controls the overall on/off function of the STM. Setting the bit high enables the counter to run while clearing the bit disables the STM. Clearing this bit to zero will stop the counter from counting and turn off the STM which will reduce its power consumption. When the bit changes state from low to high the internal counter value will be reset to zero, however when the bit changes from high to low, the internal counter will retain its residual value until the bit returns high again.

If the STM is in the Compare Match Output Mode, PWM Output Mode or Single Pulse Output Mode, then the STM output pin will be reset to its initial condition, as specified by the STOC bit, when the STON bit changes from low to high.

Bit 2~0 **STRP2~STRP0**: STM CCRP 3-bit register, compared with the STM counter bit 9 ~ bit 7
Comparator P Match Period =
000: 1024 STM clocks
001: 128 STM clocks

010: 256 STM clocks
011: 384 STM clocks
100: 512 STM clocks
101: 640 STM clocks
110: 768 STM clocks
111: 896 STM clocks

These three bits are used to setup the value on the internal CCRP 3-bit register, which are then compared with the internal counter's highest three bits. The result of this comparison can be selected to clear the internal counter if the STCCLR bit is set to zero. Setting the STCCLR bit to zero ensures that a compare match with the CCRP values will reset the internal counter. As the CCRP bits are only compared with the highest three counter bits, the compare values exist in 128 clock cycle multiples. Clearing all three bits to zero is in effect allowing the counter to overflow at its maximum value.

• STMC1 Register

Bit	7	6	5	4	3	2	1	0
Name	STM1	STM0	STIO1	STIO0	STOC	STPOL	STDPX	STCCLR
R/W	R/W	R/W	R/W	R/W	R/W	R/W	R/W	R/W
POR	0	0	0	0	0	0	0	0

Bit 7~6 **STM1~STM0**: STM operating mode selection
00: Compare Match Output Mode
01: Capture Input Mode
10: PWM Output Mode or Single Pulse Output Mode
11: Timer/Counter Mode

These bits setup the required operating mode for the STM. To ensure reliable operation the STM should be switched off before any changes are made to the STM1 and STM0 bits. In the Timer/Counter Mode, the STM output pin state is undefined.

Bit 5~4 **STIO1~STIO0**: STM external pin function selection

Compare Match Output Mode
00: No change
01: Output low
10: Output high
11: Toggle output

PWM Output Mode/Single Pulse Output Mode
00: PWM output inactive state
01: PWM output active state
10: PWM output
11: Single Pulse Output

Capture Input Mode
00: Input capture at rising edge of STPI
01: Input capture at falling edge of STPI
10: Input capture at both rising and falling edges of STPI
11: Input capture disabled

Timer/Counter Mode
Unused

These two bits are used to determine how the STM output pin changes state when a certain condition is reached. The function that these bits select depends upon in which mode the STM is running.

In the Compare Match Output Mode, the STIO1 and STIO0 bits determine how the STM output pin changes state when a compare match occurs from the Comparator A. The TM output pin can be setup to switch high, switch low or to toggle its present state when a compare match occurs from the Comparator A. When the bits are both zero, then no change will take place on the output. The initial value of the STM output pin should be setup using the STOC bit in the STMC1 register. Note that the output level

requested by the STIO1 and STIO0 bits must be different from the initial value setup using the STOC bit otherwise no change will occur on the STM output pin when a compare match occurs. After the STM output pin changes state, it can be reset to its initial level by changing the level of the STON bit from low to high.

In the PWM Output Mode, the STIO1 and STIO0 bits determine how the STM output pin changes state when a certain compare match condition occurs. The PWM output function is modified by changing these two bits. It is necessary to change the values of the STIO1 and STIO0 bits only after the STM has been switched off. Unpredictable PWM outputs will occur if the STIO1 and STIO0 bits are changed when the STM is running.

Bit 3 **STOC**: STM STP output control

Compare Match Output Mode
0: Initial low
1: Initial high

PWM Output Mode/Single Pulse Output Mode
0: Active low
1: Active high

This is the output control bit for the STM output pin. Its operation depends upon whether STM is being used in the Compare Match Output Mode or in the PWM Output Mode/Single Pulse Output Mode. It has no effect if the STM is in the Timer/Counter Mode. In the Compare Match Output Mode it determines the logic level of the STM output pin before a compare match occurs. In the PWM Output Mode it determines if the PWM signal is active high or active low. In the Single Pulse Output Mode it determines the logic level of the STM output pin when the STON bit changes from low to high.

Bit 2 **STPOL**: STM STP output polarity control
0: Non-invert
1: Invert

This bit controls the polarity of the STP output pin. When the bit is set high the STM output pin will be inverted and not inverted when the bit is zero. It has no effect if the STM is in the Timer/Counter Mode.

Bit 1 **STDPX**: STM PWM duty/period control
0: CCRP – period; CCRA – duty
1: CCRP – duty; CCRA – period

This bit determines which of the CCRA and CCRP registers are used for period and duty control of the PWM waveform.

Bit 0 **STCCLR**: STM counter clear condition selection
0: Comparator P match
1: Comparator A match

This bit is used to select the method which clears the counter. Remember that the Standard TM contains two comparators, Comparator A and Comparator P, either of which can be selected to clear the internal counter. With the STCCLR bit set high, the counter will be cleared when a compare match occurs from the Comparator A. When the bit is low, the counter will be cleared when a compare match occurs from the Comparator P or with a counter overflow. A counter overflow clearing method can only be implemented if the CCRP bits are all cleared to zero. The STCCLR bit is not used in the PWM Output Mode or Single Pulse Output Mode.

• **STMDL Register**

Bit	7	6	5	4	3	2	1	0
Name	D7	D6	D5	D4	D3	D2	D1	D0
R/W	R	R	R	R	R	R	R	R
POR	0	0	0	0	0	0	0	0

Bit 7~0 D7~D0: STM Counter Low Byte Register bit 7 ~ bit 0
STM 10-bit Counter bit 7 ~ bit 0

• **STMDH Register**

Bit	7	6	5	4	3	2	1	0
Name	—	—	—	—	—	—	D9	D8
R/W	—	—	—	—	—	—	R	R
POR	—	—	—	—	—	—	0	0

Bit 7~2 Umimplemented, read as “0”
Bit 1~0 **D9~D8**: STM Counter High Byte Register bit 1 ~ bit 0
STM 10-bit Counter bit 9 ~ bit 8

• **STMAL Register**

Bit	7	6	5	4	3	2	1	0
Name	D7	D6	D5	D4	D3	D2	D1	D0
R/W	R/W	R/W	R/W	R/W	R/W	R/W	R/W	R/W
POR	0	0	0	0	0	0	0	0

Bit 7~0 **D7~D0**: STM CCRA Low Byte Register bit 7 ~ bit 0
STM 10-bit CCRA bit 7 ~ bit 0

• **STMAH Register**

Bit	7	6	5	4	3	2	1	0
Name	—	—	—	—	—	—	D9	D8
R/W	—	—	—	—	—	—	R/W	R/W
POR	—	—	—	—	—	—	0	0

Bit 7~2 Umimplemented, read as “0”
Bit 1~0 **D9~D8**: STM CCRA High Byte Register bit 1 ~ bit 0
STM 10-bit CCRA bit 9 ~ bit 8

Standard Type TM Operation Modes

The Standard Type TM can operate in one of five operating modes, Compare Match Output Mode, PWM Output Mode, Single Pulse Output Mode, Capture Input Mode or Timer/Counter Mode. The operating mode is selected using the STM1 and STM0 bits in the STMC1 register.

Compare Match Output Mode

To select this mode, bits STM1 and STM0 in the STMC1 register, should be set to “00” respectively. In this mode once the counter is enabled and running it can be cleared by three methods. These are a counter overflow, a compare match from Comparator A and a compare match from Comparator P. When the STCCLR bit is low, there are two ways in which the counter can be cleared. One is when a compare match from Comparator P, the other is when the CCRP bits are all zero which allows the counter to overflow. Here both STMAF and STMPF interrupt request flags for Comparator A and Comparator P respectively, will both be generated.

If the STCCLR bit in the STMC1 register is high then the counter will be cleared when a compare match occurs from Comparator A. However, here only the STMAF interrupt request flag will be generated even if the value of the CCRP bits is less than that of the CCRA registers. Therefore when STCCLR is high no STMPF interrupt request flag will be generated. In the Compare Match Output Mode, the CCRA cannot be set to “0”.

If the CCRA bits are all zero, the counter will overflow when it reaches its maximum 10-bit, 3FF Hex, value, however here the STMAF interrupt request flag will not be generated.

As the name of the mode suggests, after a comparison is made, the STM output pin, will change state. The STM output pin condition however only changes state when an STMAF interrupt request flag is generated after a compare match occurs from Comparator A. The STMPF interrupt request flag, generated from a compare match occurs from Comparator P, will have no effect on the STM output pin. The way in which the STM output pin changes state are determined by the condition of the STIO1 and STIO0 bits in the STMC1 register. The STM output pin can be selected using the STIO1 and STIO0 bits to go high, to go low or to toggle from its present condition when a compare match occurs from Comparator A. The initial condition of the STM output pin, which is setup after the STON bit changes from low to high, is setup using the STOC bit. Note that if the STIO1 and STIO0 bits are zero then no pin change will take place.

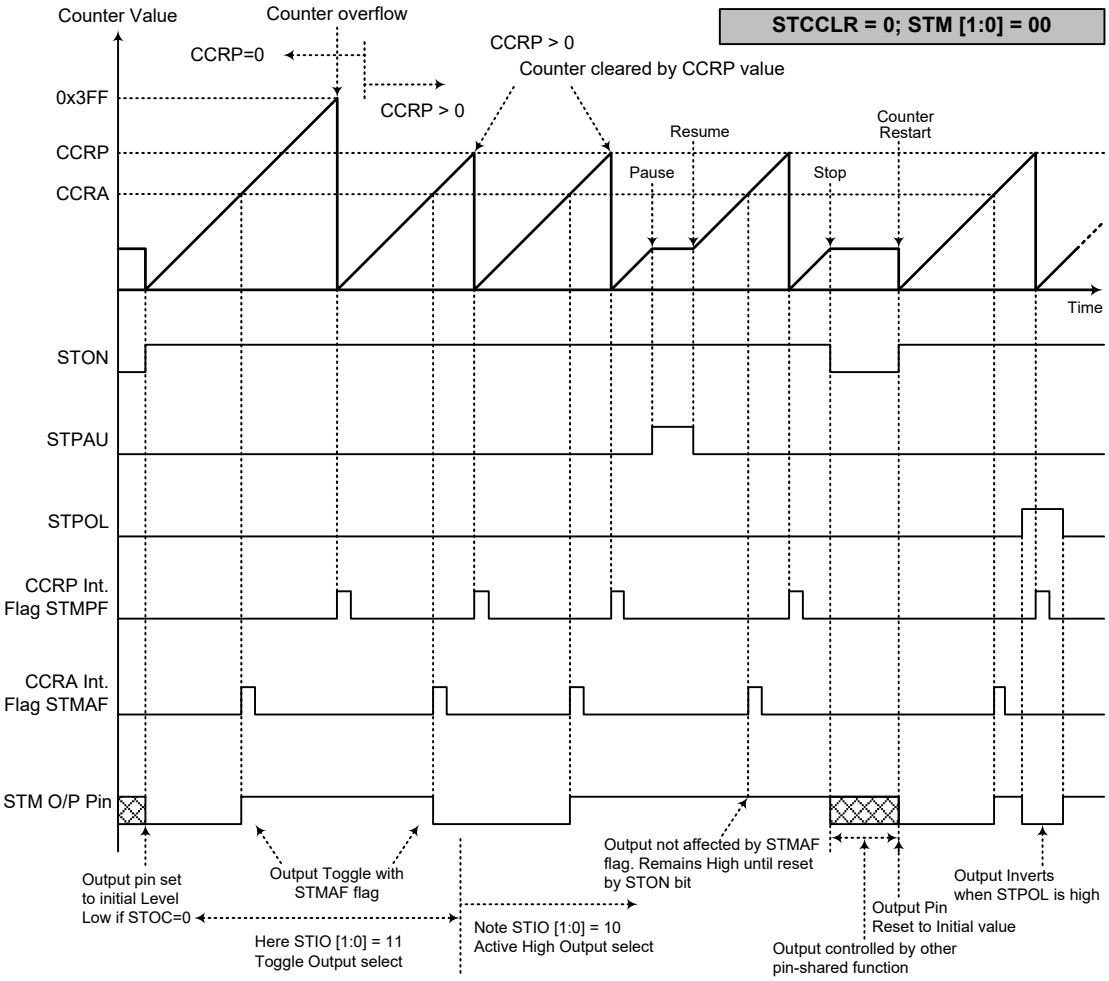

Compare Match Output Mode – STCCLR=0

Note: 1. With STCCLR=0, a Comparator P match will clear the counter
2. The STM output pin is controlled only by the STMAF flag
3. The output pin is reset to its initial state by a STON bit rising edge

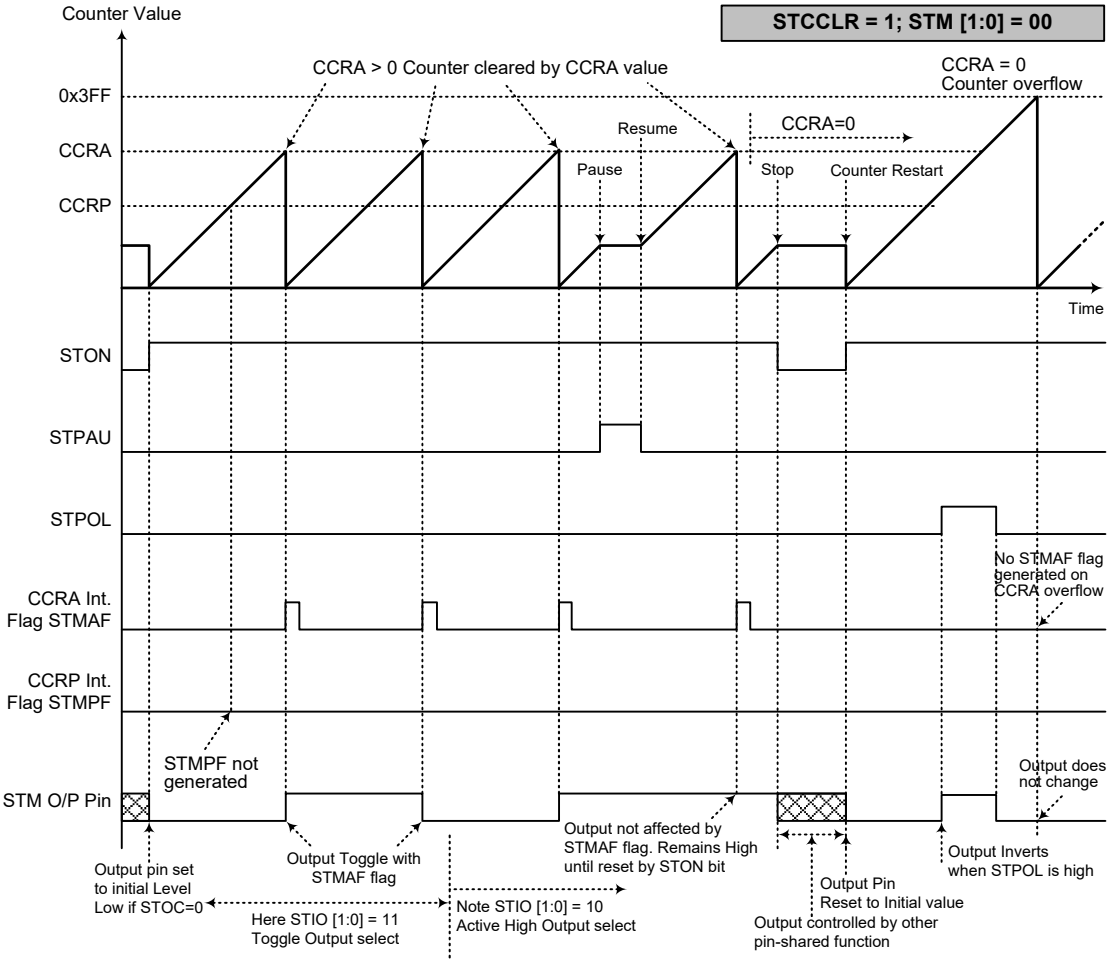

Compare Match Output Mode – STCCLR=1

Note: 1. With STCCLR=1, a Comparator A match will clear the counter
2. The STM output pin is controlled only by the STMAF flag
3. The output pin is reset to its initial state by a STON bit rising edge
4. The STMPF flag is not generated when STCCLR=1

Timer/Counter Mode

To select this mode, bits STM1 and STM0 in the STMC1 register should be set to "11" respectively. The Timer/Counter Mode operates in an identical way to the Compare Match Output Mode generating the same interrupt flags. The exception is that in the Timer/Counter Mode the STM output pin is not used. Therefore the above description and Timing Diagrams for the Compare Match Output Mode can be used to understand its function. As the STM output pin is not used in this mode, the pin can be used as a normal I/O pin or other pin-shared functions.

PWM Output Mode

To select this mode, bits STM1 and STM0 in the STMC1 register should be set to "10" respectively. The PWM function within the STM is useful for applications which require functions such as motor control, heating control, illumination control etc. By providing a signal of fixed frequency but of varying duty cycle on the STM output pin, a square wave AC waveform can be generated with varying equivalent DC RMS values.

As both the period and duty cycle of the PWM waveform can be controlled, the choice of generated waveform is extremely flexible. In the PWM Output Mode, the STCCLR bit has no effect on the PWM period. Both of the CCRA and CCRP registers are used to generate the PWM waveform, one register is used to clear the internal counter and thus control the PWM waveform frequency, while the other one is used to control the duty cycle. Which register is used to control either frequency or duty cycle is determined using the STDPX bit in the STMC1 register. The PWM waveform frequency and duty cycle can therefore be controlled by the values in the CCRA and CCRP registers.

An interrupt flag, one for each of the CCRA and CCRP, will be generated when a compare match occurs from either Comparator A or Comparator P. The STOC bit in the STMC1 register is used to select the required polarity of the PWM waveform while the two STIO1 and STIO0 bits are used to enable the PWM output or to force the STM output pin to a fixed high or low level. The STPOL bit is used to reverse the polarity of the PWM output waveform.

- **10-bit STM, PWM Output Mode, Edge-aligned Mode, STDPX=0**

CCRP	1~7	0
Period	CCRP×128	1024
Duty	CCRA	

If f_{SYS}=16MHz, STM clock source is $f_{SYS}/4$, CCRP=2 and CCRA=256,

The STM PWM output frequency=$(f_{SYS}/4)/(2\times256)=f_{SYS}/2048$=7.8125kHz, duty=128/(2×256)=25%,

If the Duty value defined by the CCRA register is equal to or greater than the Period value, then the PWM output duty is 100%.

- **10-bit STM, PWM Output Mode, Edge-aligned Mode, STDPX=1**

CCRP	1~7	0
Period	CCRA	
Duty	CCRP×128	1024

The PWM output period is determined by the CCRA register value together with the STM clock while the PWM duty cycle is defined by the CCRP register value.

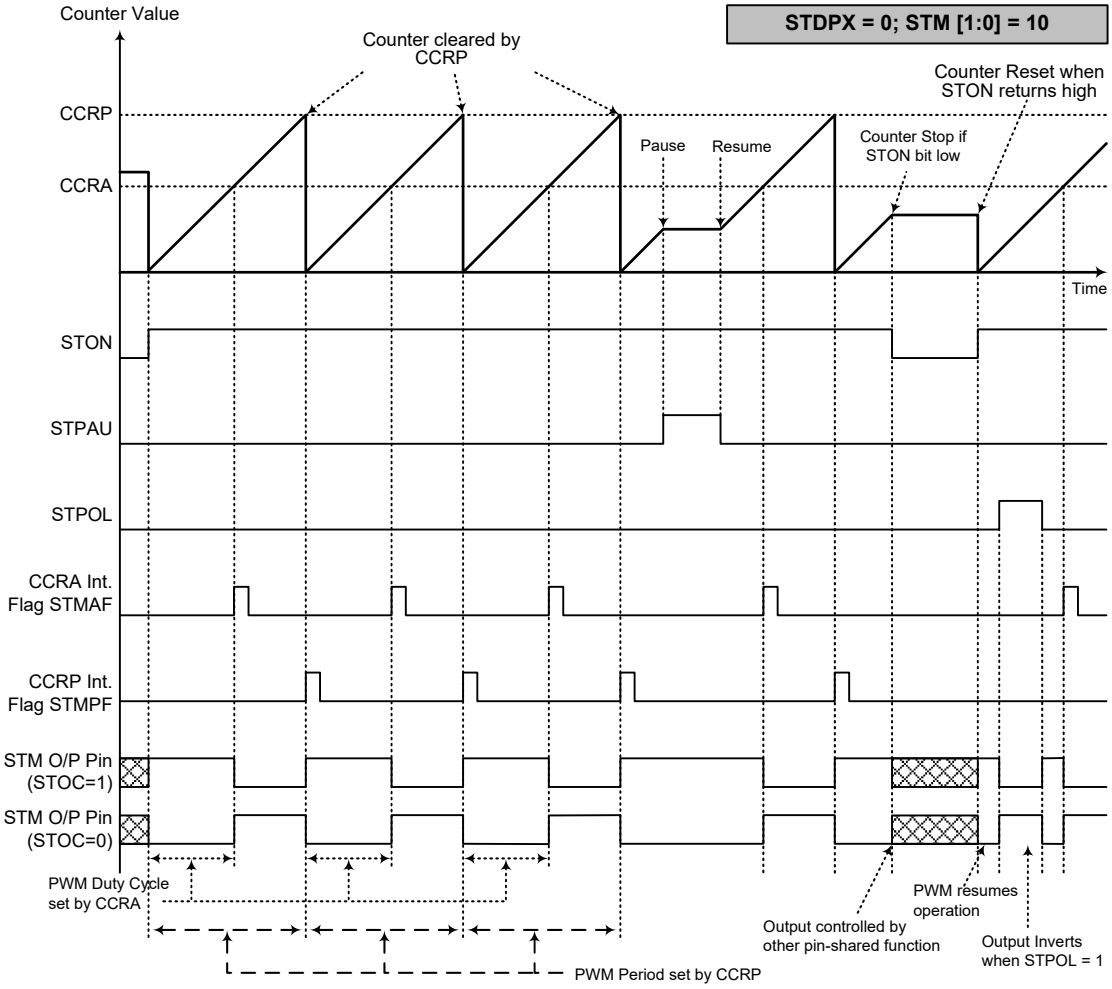

PWM Output Mode – STDPX=0

Note: 1. Here STDPX=0 – Counter cleared by CCRP
2. A counter clear sets the PWM Period
3. The internal PWM function continues even when STIO[1:0]=00 or 01
4. The STCCLR bit has no influence on PWM operation

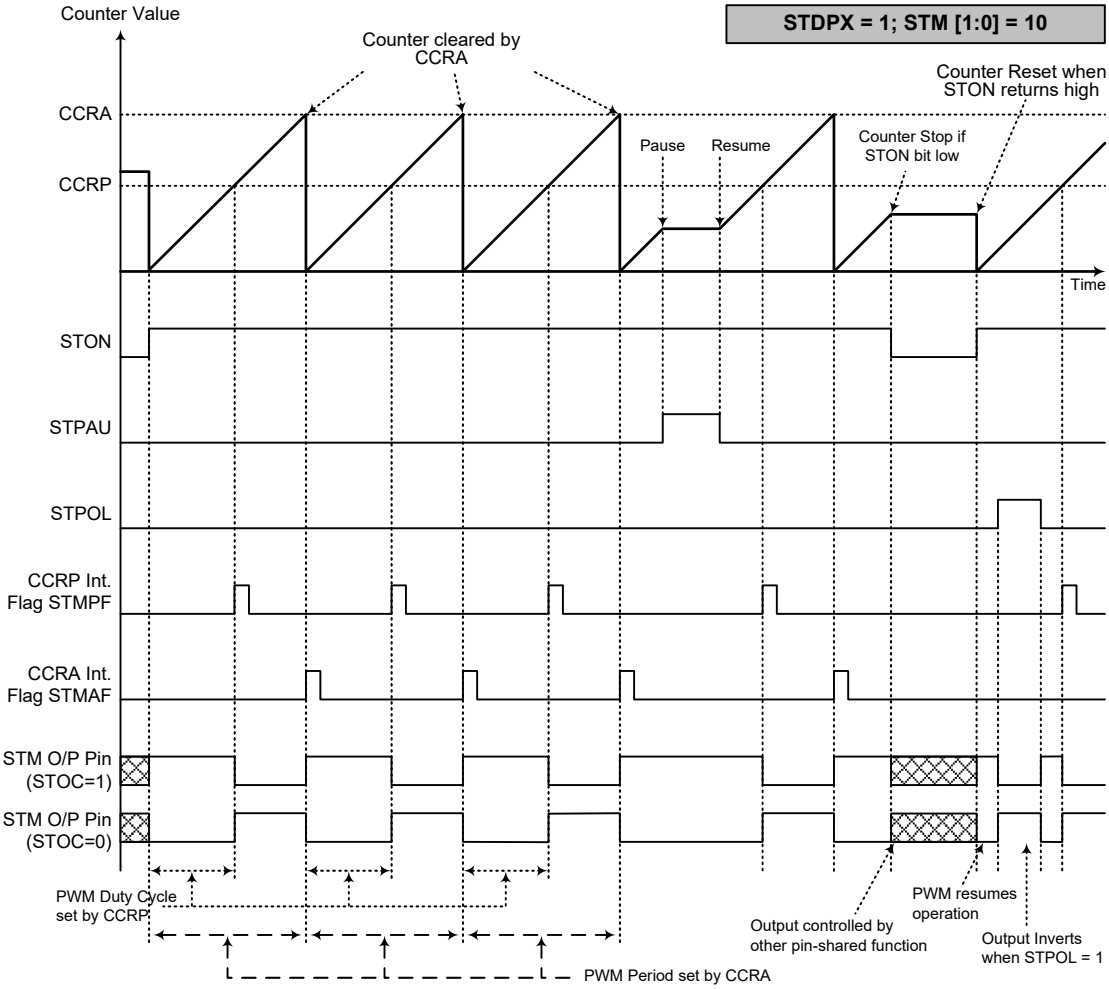

PWM Output Mode – STDPX=1

Note: 1. Here STDPX=1 – Counter cleared by CCRA
2. A counter clear sets the PWM Period
3. The internal PWM function continues even when STIO[1:0]=00 or 01
4. The STCCLR bit has no influence on PWM operation

Single Pulse Output Mode

To select this mode, bits STM1 and STM0 in the STMC1 register should be set to “10” respectively and also the STIO1 and STIO0 bits should be set to “11” respectively. The Single Pulse Output Mode, as the name suggests, will generate a single shot pulse on the STM output pin.

The trigger for the pulse output leading edge is a low to high transition of the STON bit, which can be implemented using the application program. However in the Single Pulse Output Mode, the STON bit can also be made to automatically change from low to high using the external STCK pin, which will in turn initiate the Single Pulse output. When the STON bit transitions to a high level, the counter will start running and the pulse leading edge will be generated. The STON bit should remain high when the pulse is in its active state. The generated pulse trailing edge will be generated when the STON bit is cleared to zero, which can be implemented using the application program or when a compare match occurs from Comparator A.

However a compare match from Comparator A will also automatically clear the STON bit and thus generate the Single Pulse output trailing edge. In this way the CCRA value can be used to control the pulse width. A compare match from Comparator A will also generate an STM interrupt. The counter can only be reset back to zero when the STON bit changes from low to high when the counter restarts. In the Single Pulse Output Mode CCRP is not used. The STCCLR and STDPX bits are not used in this mode.

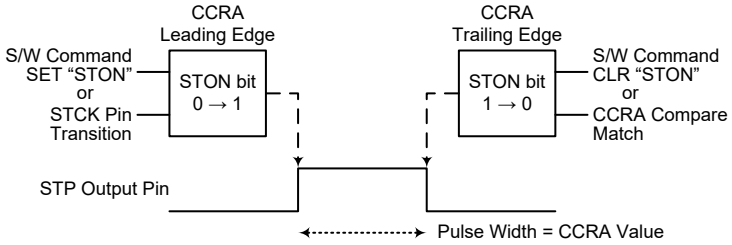

Single Pulse Generation

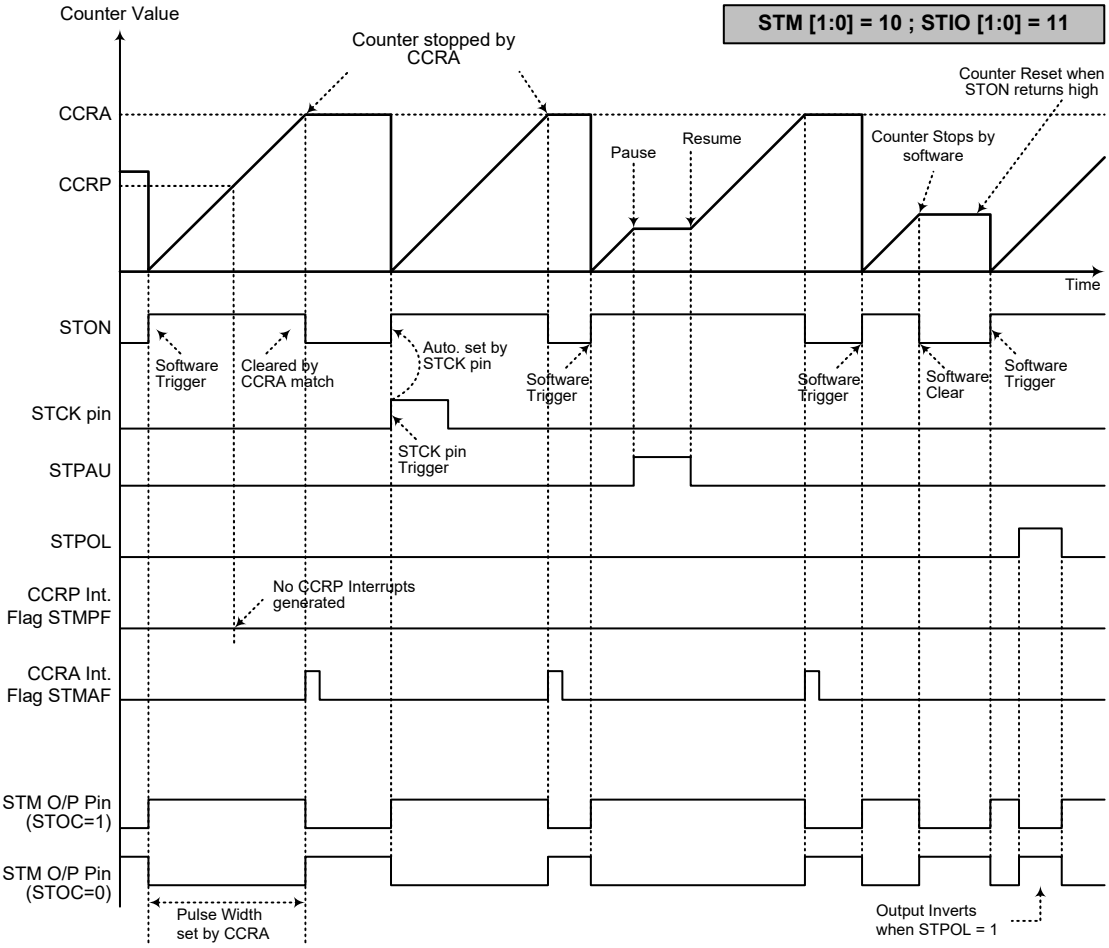

Single Pulse Output Mode

Note: 1. Counter stopped by CCRA
2. CCRP is not used
3. The pulse triggered by the STCK pin or by setting the STON bit high
4. An STCK pin active edge will automatically set the STON bit high
5. In the Single Pulse Output Mode, STIO[1:0] must be set to “11” and cannot be changed

Capture Input Mode

To select this mode bits STM1 and STM0 in the STMC1 register should be set to “01” respectively. This mode enables external signals to capture and store the present value of the internal counter and can therefore be used for applications such as pulse width measurements. The external signal is supplied on the STPI pin, whose active edge can be a rising edge, a falling edge or both rising and falling edges; the active edge transition type is selected using the STIO1 and STIO0 bits in the STMC1 register. The counter is started when the STON bit changes from low to high which is initiated using the application program.

When the required edge transition appears on the STPI pin the present value in the counter will be latched into the CCRA registers and an STM interrupt generated. Irrespective of what events occur on the STPI pin the counter will continue to free run until the STON bit changes from high to low. When a CCRP compare match occurs the counter will reset back to zero; in this way the CCRP value can be used to control the maximum counter value. When a CCRP compare match occurs from Comparator P, an STM interrupt will also be generated. Counting the number of overflow interrupt signals from the CCRP can be a useful method in measuring long pulse widths. The STIO1 and STIO0 bits can select the active trigger edge on the STPI pin to be a rising edge, falling edge or both edge types. If the STIO1 and STIO0 bits are both set high, then no capture operation will take place irrespective of what happens on the STPI pin, however it must be noted that the counter will continue to run. The STCCLR and STDPX bits are not used in this Mode.

There are some considerations that should be noted. If the captured pulse width is less than 2 timer clock periods, it may be ignored by hardware. After the counter value is latched to the CCRA registers by an active capture edge, the STMAF flag will be set high after 0.5 timer clock periods. The delay time from the active capture edge received to the action of latching counter value to CCRA registers is less than 1.5 timer clock periods.

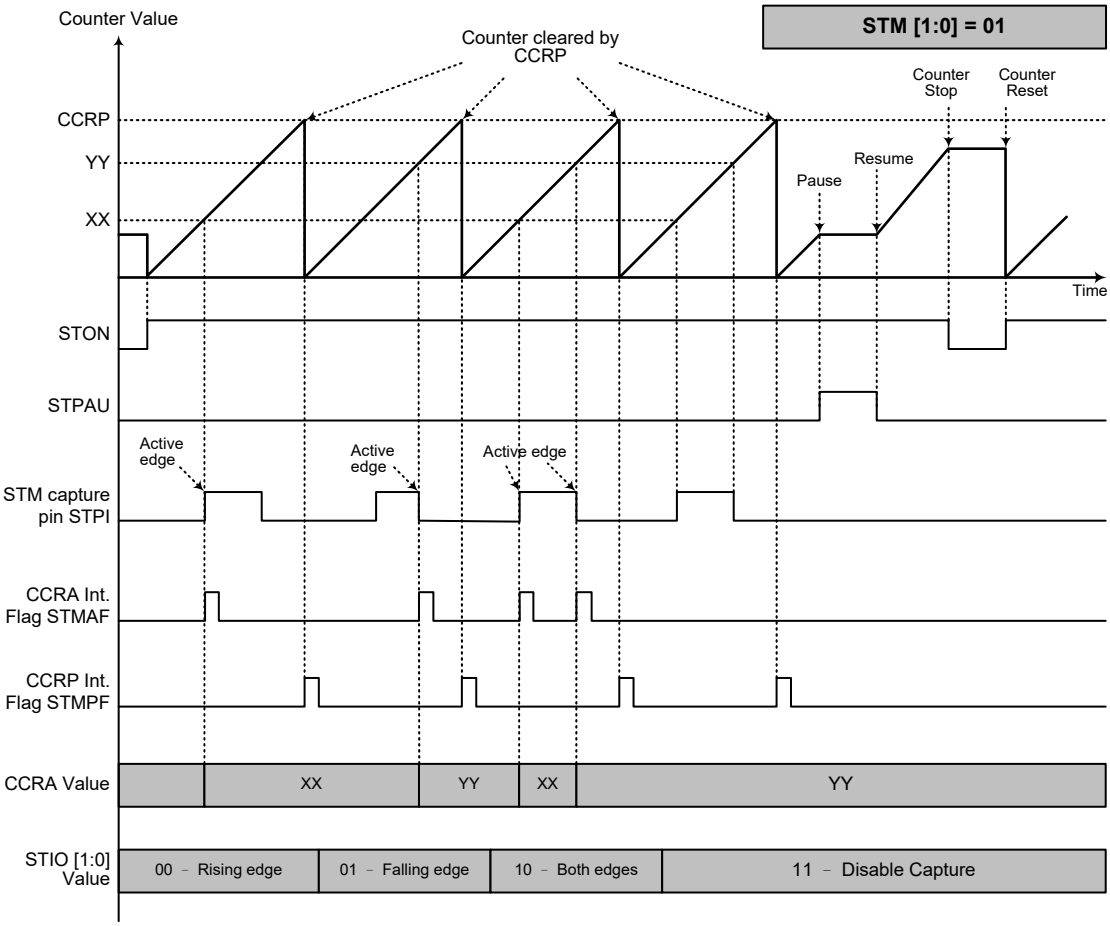

Capture Input Mode

Note: 1. STM[1:0]=01 and active edge set by the STIO[1:0] bits
2. A STM Capture input pin active edge transfers the counter value to CCRA
3. STCCLR bit not used
4. No output function – STOC and STPOL bits are not used
5. CCRP determines the counter value and the counter has a maximum count value when CCRP is equal to zero
6. The capture input mode cannot be used if the selected STM counter clock is not available

Periodic Type TM – PTM

The Periodic Type TM contains five operating modes, which are Compare Match Output, Timer/Event Counter, Capture Input, Single Pulse Output and PWM Output modes. The Periodic TM can also be controlled with two external input pins and can drive one external output pin.

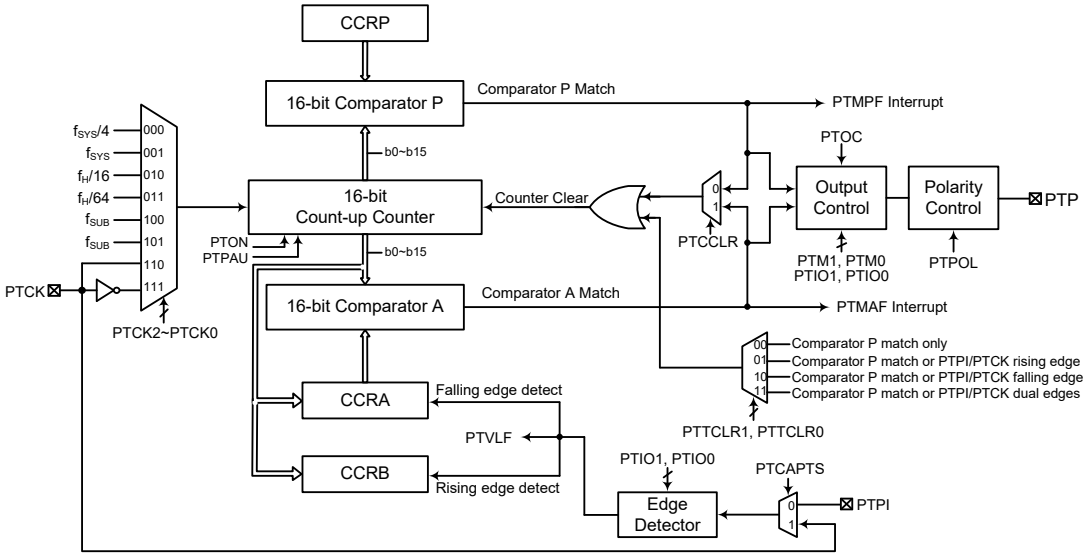

Note: The PTM external pins are pin-shared with other functions, so before using the PTM function, the relevant pin-shared function registers must be set properly to enable the PTM pin function. The PTCK and PTPI pins, if used, must also be set as an input by setting the corresponding bit in the port control register.

16-bit Periodic Type TM Block Diagram

Periodic TM Operation

The size of Periodic Type TM is 16-bit wide and its core is a 16-bit count-up counter which is driven by a user selectable internal or external clock source. There are also two internal comparators with the names, Comparator A and Comparator P. These comparators will compare the value in the counter with CCRP and CCRA registers. The CCRP and CCRA comparators are 16-bit wide whose value is respectively compared with all counter bits.

The only way of changing the value of the 16-bit counter using the application program is to clear the counter by changing the PTON bit from low to high. The counter will also be cleared automatically by a counter overflow or a compare match with one of its associated comparators. When these conditions occur, a PTM interrupt signal will also usually be generated. The Periodic Type TM can operate in a number of different operational modes, can be driven by different clock sources including an input pin and can also control two output pins. All operating setup conditions are selected using relevant internal registers.

Periodic Type TM Register Description

Overall operation of the Periodic TM is controlled using a series of registers. A read only register pair exists to store the internal counter 16-bit value, while three read/write register pairs exist to store the internal 16-bit CCRA value, CCRP value and CCRB value. The remaining three registers are control registers which setup the different operating and control modes.

Register Name	Bit							
	7	6	5	4	3	2	1	0
PTMC0	PTPAU	PTCK2	PTCK1	PTCK0	PTON	—	—	—
PTMC1	PTM1	PTM0	PTIO1	PTIO0	PTOC	PTPOL	PTCAPTS	PTCCLR
PTMC2	—	—	—	—	—	PTTCLR1	PTTCLR0	PTVLF
PTMDL	D7	D6	D5	D4	D3	D2	D1	D0
PTMDH	D15	D14	D13	D12	D11	D10	D9	D8
PTMAL	D7	D6	D5	D4	D3	D2	D1	D0
PTMAH	D15	D14	D13	D12	D11	D10	D9	D8
PTMBL	D7	D6	D5	D4	D3	D2	D1	D0
PTMBH	D15	D14	D13	D12	D11	D10	D9	D8
PTMRPL	D7	D6	D5	D4	D3	D2	D1	D0
PTMRPH	D15	D14	D13	D12	D11	D10	D9	D8

16-bit Periodic TM Register List

- **PTMC0 Register**

Bit	7	6	5	4	3	2	1	0
Name	PTPAU	PTCK2	PTCK1	PTCK0	PTON	—	—	—
R/W	R/W	R/W	R/W	R/W	R/W	—	—	—
POR	0	0	0	0	0	—	—	—

Bit 7 **PTPAU**: PTM Counter Pause control
0: Run
1: Pause

The counter can be paused by setting this bit high. Clearing the bit to zero restores normal counter operation. When in a Pause condition the PTM will remain powered up and continue to consume power. The counter will retain its residual value when this bit changes from low to high and resume counting from this value when the bit changes to a low value again.

Bit 6~4 **PTCK2~PTCK0**: Select PTM Counter clock
000: $f_{SYS}/4$
001: f_{SYS}
010: $f_H/16$
011: $f_H/64$
100: f_{SUB}
101: f_{SUB}
110: PTCK rising edge clock
111: PTCK falling edge clock

These three bits are used to select the clock source for the PTM. The external pin clock source can be chosen to be active on the rising or falling edge. The clock source f_{SYS} is the system clock, while f_H and f_{SUB} are other internal clocks, the details of which can be found in the Operating Modes and System Clocks section.

Bit 3 **PTON**: PTM Counter On/Off control
0: Off
1: On

This bit controls the overall on/off function of the PTM. Setting the bit high enables the counter to run while clearing the bit disables the PTM. Clearing this bit to zero will stop the counter from counting and turn off the PTM which will reduce its power consumption. When the bit changes state from low to high the internal counter value will be reset to zero, however when the bit changes from high to low, the internal counter will retain its residual value.

If the PTM is in the Compare Match Output Mode, PWM Output Mode or Single Pulse Output Mode then the PTM output pin will be reset to its initial condition, as specified by the PTOC bit, when the PTON bit changes from low to high.

Bit 2~0 Unimplemented, read as “0”

• **PTMC1 Register**

Bit	7	6	5	4	3	2	1	0
Name	PTM1	PTM0	PTIO1	PTIO0	PTOC	PTPOL	PTCAPTS	PTCCLR
R/W	R/W	R/W	R/W	R/W	R/W	R/W	R/W	R/W
POR	0	0	0	0	0	0	0	0

Bit 7~6 **PTM1~PTM0**: Select PTM Operating Mode
00: Compare Match Output Mode
01: Capture Input Mode
10: PWM Output Mode or Single Pulse Output Mode
11: Timer/Counter Mode

These bits setup the required operating mode for the PTM. To ensure reliable operation the PTM should be switched off before any changes are made to the PTM1 and PTM0 bits. In the Timer/Counter Mode, the PTM output pin state is undefined.

Bit 5~4 **PTIO1~PTIO0**: Select PTM external pin function

Compare Match Output Mode
00: No change
01: Output low
10: Output high
11: Toggle output

PWM Output Mode/Single Pulse Output Mode
00: PWM output inactive state
01: PWM output active state
10: PWM output
11: Single Pulse Output

Capture Input Mode

PTTCLR[1:0]=00B:
00: Input capture at rising edge of PTPI or PTCK, and the counter value will be latched into CCRA
01: Input capture at falling edge of PTPI or PTCK, and the counter value will be latched into CCRA
10: Input capture at both falling and rising edges of PTPI or PTCK, and the counter value will be latched into CCRA
11: Input capture disabled

PTTCLR[1:0]=01B, 10B or 11B:
00: Input capture at rising edge of PTPI or PTCK, and the counter value will be latched into CCRB
01: Input capture at falling edge of PTPI or PTCK, and the counter value will be latched into CCRA
10: Input capture at both falling and rising edges of PTPI or PTCK, and the counter value will be latched into CCRA at falling edge or CCRB at rising edge
11: Input capture disabled

Timer/Counter Mode
Unused

These two bits are used to determine how the PTM external pin changes state when a certain condition is reached. The function that these bits select depends upon in which mode the PTM is running.

In the Compare Match Output Mode, the PTIO1 and PTIO0 bits determine how the PTM output pin changes state when a compare match occurs from the Comparator A. The PTM output pin can be setup to switch high, switch low or to toggle its present state when a compare match occurs from the Comparator A. When the bits are both zero, then no change will take place on the output. The initial value of the PTM output pin should be setup using the PTOC bit in the PTMC1 register. Note that the output level requested by the PTIO1 and PTIO0 bits must be different from the initial value setup using the PTOC bit otherwise no change will occur on the PTM output pin when a compare match occurs. After the PTM output pin changes state, it can be reset to its initial level by changing the level of the PTON bit from low to high.

In the PWM output Mode, the PTIO1 and PTIO0 bits determine how the TM output pin changes state when a certain compare match condition occurs. The PTM output function is modified by changing these two bits. It is necessary to change the values of the PTIO1 and PTIO0 bits only after the PTM has been switched off. Unpredictable PWM outputs will occur if the PTIO1 and PTIO0 bits are changed when the PTM is running.

Bit 3 **PTOC**: PTM PTP Output control

Compare Match Output Mode
0: Initial low
1: Initial high

PWM Output Mode/Single Pulse Output Mode
0: Active low
1: Active high

This is the output control bit for the PTM output pin. Its operation depends upon whether PTM is being used in the Compare Match Output Mode or in the PWM Output Mode / Single Pulse Output Mode. It has no effect if the PTM is in the Timer/Counter Mode. In the Compare Match Output Mode it determines the logic level of the PTM output pin before a compare match occurs. In the PWM Output Mode it determines if the PWM signal is active high or active low. In the Single Pulse Output Mode it determines the logic level of the PTM output pin when the PTON bit changes from low to high.

Bit 2 **PTPOL**: PTM PTP Output polarity control
0: Non-inverted
1: Inverted

This bit controls the polarity of the PTP output pin. When the bit is set high the PTM output pin will be inverted and not inverted when the bit is zero. It has no effect if the PTM is in the Timer/Counter Mode.

Bit 1 **PTCAPTS**: PTM Capture Trigger Source selection
0: From PTPI pin
1: From PTCK pin

Bit 0 **PTCCLR**: PTM Counter Clear condition selection
0: Comparator P match
1: Comparator A match

This bit is used to select the method which clears the counter. Remember that the Periodic TM contains two comparators, Comparator A and Comparator P, either of which can be selected to clear the internal counter. With the PTCCLR bit set high, the counter will be cleared when a compare match occurs from the Comparator A. When the bit is low, the counter will be cleared when a compare match occurs from the Comparator P or with a counter overflow. A counter overflow clearing method can only be implemented if the CCRP bits are all cleared to zero. The PTCCLR bit is not used in the PWM Output, Single Pulse Output or Capture Input Mode.

- **PTMC2 Register**

Bit	7	6	5	4	3	2	1	0
Name	—	—	—	—	—	PTTCLR1	PTTCLR0	PTVLF
R/W	—	—	—	—	—	R/W	R/W	R
POR	—	—	—	—	—	0	0	0

Bit 7~3 Unimplemented, read as “0”

Bit 2~1 **PTTCLR1~PTTCLR0**: Select PTM Counter clear condition in capture input mode only
00: Comparator P match
01: Comparator P match or PTCK/PTPI rising edge
10: Comparator P match or PTCK/PTPI falling edge
11: Comparator P match or PTCK/PTPI dual edges

Note that these bits selection can be available only when the PTM operates in the Capture Input Mode.

Bit 0 **PTVLF**: PTM counter value latch edge flag
0: Falling edge trigger the counter value latch
1: Rising edge trigger the counter value latch
When the PTTCLR1~PTTCLR0 bits equal to 00B, ignore this flag status.

• **PTMDL Register**

Bit	7	6	5	4	3	2	1	0
Name	D7	D6	D5	D4	D3	D2	D1	D0
R/W	R	R	R	R	R	R	R	R
POR	0	0	0	0	0	0	0	0

Bit 7~0 **D7~D0**: PTM Counter Low Byte Register bit 7 ~ bit 0
PTM 16-bit Counter bit 7 ~ bit 0

• **PTMDH Register**

Bit	7	6	5	4	3	2	1	0
Name	D15	D14	D13	D12	D11	D10	D9	D8
R/W	R	R	R	R	R	R	R	R
POR	0	0	0	0	0	0	0	0

Bit 7~0 **D15~D8**: PTM Counter High Byte Register bit 7 ~ bit 0
PTM 16-bit Counter bit 15 ~ bit 8

• **PTMAL Register**

Bit	7	6	5	4	3	2	1	0
Name	D7	D6	D5	D4	D3	D2	D1	D0
R/W	R/W	R/W	R/W	R/W	R/W	R/W	R/W	R/W
POR	0	0	0	0	0	0	0	0

Bit 7~0 **D7~D0**: PTM CCRA Low Byte Register bit 7 ~ bit 0
PTM 16-bit CCRA bit 7 ~ bit 0

• **PTMAH Register**

Bit	7	6	5	4	3	2	1	0
Name	D15	D14	D13	D12	D11	D10	D9	D8
R/W	R/W	R/W	R/W	R/W	R/W	R/W	R/W	R/W
POR	0	0	0	0	0	0	0	0

Bit 7~0 **D15~D8**: PTM CCRA High Byte Register bit 7 ~ bit 0
PTM 16-bit CCRA bit 15 ~ bit 8

• **PTMBL Register**

Bit	7	6	5	4	3	2	1	0
Name	D7	D6	D5	D4	D3	D2	D1	D0
R/W	R/W	R/W	R/W	R/W	R/W	R/W	R/W	R/W
POR	0	0	0	0	0	0	0	0

Bit 7~0 **D7~D0**: PTM CCRB Low Byte Register bit 7 ~ bit 0
PTM 16-bit CCRB bit 7 ~ bit 0

• **PTMBH Register**

Bit	7	6	5	4	3	2	1	0
Name	D15	D14	D13	D12	D11	D10	D9	D8
R/W	R/W	R/W	R/W	R/W	R/W	R/W	R/W	R/W
POR	0	0	0	0	0	0	0	0

Bit 7~0 **D15~D8**: PTM CCRB High Byte Register bit 7 ~ bit 0
PTM 16-bit CCRB bit 15 ~ bit 8

• **PTMRPL Register**

Bit	7	6	5	4	3	2	1	0
Name	D7	D6	D5	D4	D3	D2	D1	D0
R/W	R/W	R/W	R/W	R/W	R/W	R/W	R/W	R/W
POR	0	0	0	0	0	0	0	0

Bit 7~0 **D7~D0**: PTM CCRP Low Byte Register bit 7 ~ bit 0
PTM 16-bit CCRP bit 7 ~ bit 0

• **PTMRPH Register**

Bit	7	6	5	4	3	2	1	0
Name	D15	D14	D13	D12	D11	D10	D9	D8
R/W	R/W	R/W	R/W	R/W	R/W	R/W	R/W	R/W
POR	0	0	0	0	0	0	0	0

Bit 7~0 **D15~D8**: PTM CCRP High Byte Register bit 7 ~ bit 0
PTM 16-bit CCRP bit 15 ~ bit 8

Periodic Type TM Operation Modes

The Periodic Type TM can operate in one of five operating modes, Compare Match Output Mode, PWM Output Mode, Single Pulse Output Mode, Capture Input Mode or Timer/Counter Mode. The operating mode is selected using the PTM1 and PTM0 bits in the PTMC1 register.

Compare Match Output Mode

To select this mode, bits PTM1 and PTM0 in the PTMC1 register, should be set to 00 respectively. In this mode once the counter is enabled and running it can be cleared by three methods. These are a counter overflow, a compare match from Comparator A and a compare match from Comparator P. When the PTCCLR bit is low, there are two ways in which the counter can be cleared. One is when a compare match from Comparator P, the other is when the CCRP bits are all zero which allows the counter to overflow. Here both PTMAF and PTMPF interrupt request flags for Comparator A and Comparator P respectively, will both be generated.

If the PTCCLR bit in the PTMC1 register is high then the counter will be cleared when a compare match occurs from Comparator A. However, here only the PTMAF interrupt request flag will be generated even if the value of the CCRP bits is less than that of the CCRA registers. Therefore when PTCCLR is high no PTMPF interrupt request flag will be generated. In the Compare Match Output Mode, the CCRA cannot be cleared to “0”.

If the CCRA bits are all zero, the counter will overflow when it reaches its maximum 16-bit, FFFF Hex, value, however here the PTMAF interrupt request flag will not be generated.

As the name of the mode suggests, after a comparison is made, the PTM output pin will change state. The PTM output pin condition however only changes state when a PTMAF interrupt request flag is generated after a compare match occurs from Comparator A. The PTMPF interrupt request flag, generated from a compare match occurs from Comparator P, will have no effect on the PTM

output pin. The way in which the PTM output pin changes state are determined by the condition of the PTIO1 and PTIO0 bits in the PTMC1 register. The PTM output pin can be selected using the PTIO1 and PTIO0 bits to go high, to go low or to toggle from its present condition when a compare match occurs from Comparator A. The initial condition of the PTM output pin, which is setup after the PTON bit changes from low to high, is setup using the PTOC bit. Note that if the PTIO1 and PTIO0 bits are zero then no pin change will take place.

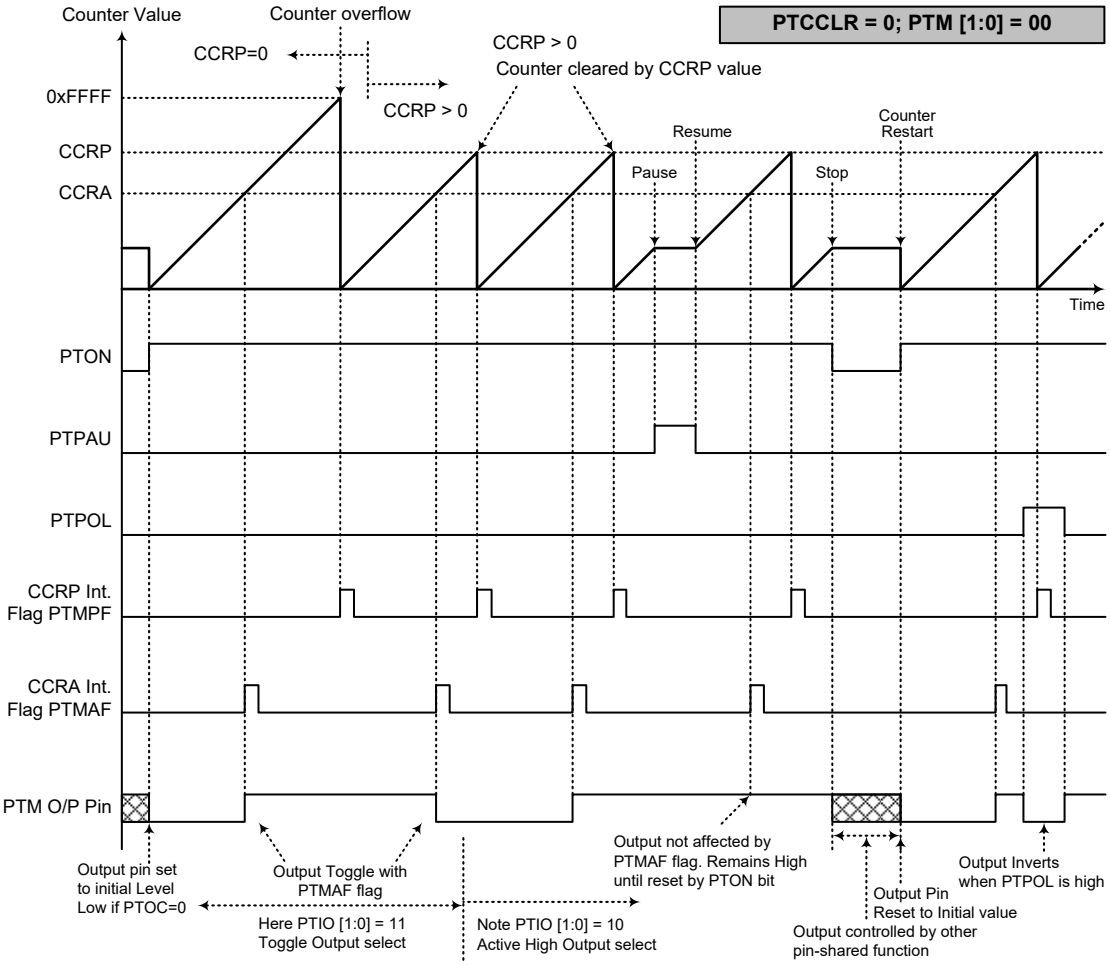

Compare Match Output Mode – PTCCLR=0

Note: 1. With PTCCLR=0, a Comparator P match will clear the counter
2. The PTM output pin is controlled only by the PTMAF flag
3. The output pin is reset to its initial state by a PTON bit rising edge

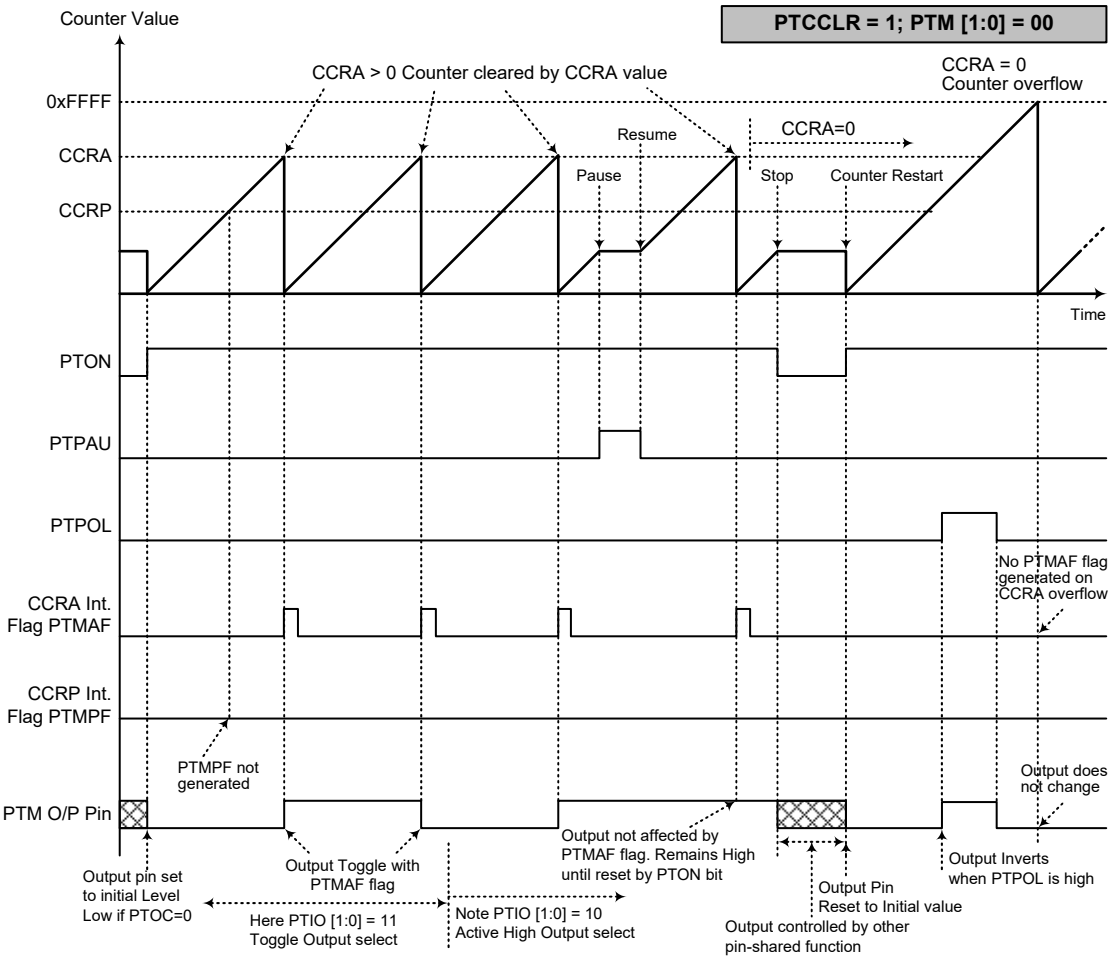

Compare Match Output Mode – PTCCLR=1

Note: 1. With PTCCLR=1, a Comparator A match will clear the counter
2. The PTM output pin is controlled only by the PTMAF flag
3. The output pin is reset to its initial state by a PTON bit rising edge
4. A PTMPF flag is not generated when PTCCLR=1

Timer/Counter Mode

To select this mode, bits PTM1 and PTM0 in the PTMC1 register should be set to 11 respectively. The Timer/Counter Mode operates in an identical way to the Compare Match Output Mode generating the same interrupt flags. The exception is that in the Timer/Counter Mode the PTM output pin is not used. Therefore the above description and Timing Diagrams for the Compare Match Output Mode can be used to understand its function. As the PTM output pin is not used in this mode, the pin can be used as a normal I/O pin or other pin-shared function.

PWM Output Mode

To select this mode, bits PTM1 and PTM0 in the PTMC1 register should be set to 10 respectively. The PWM function within the PTM is useful for applications which require functions such as motor control, heating control, illumination control, etc. By providing a signal of fixed frequency but of varying duty cycle on the PTM output pin, a square wave AC waveform can be generated with varying equivalent DC RMS values.

As both the period and duty cycle of the PWM waveform can be controlled, the choice of generated waveform is extremely flexible. In the PWM Output mode, the PTCCLR bit has no effect as the PWM period. Both of the CCRP and CCRA registers are used to generate the PWM waveform, one register is used to clear the internal counter and thus control the PWM waveform frequency, while the other one is used to control the duty cycle. The PWM waveform frequency and duty cycle can therefore be controlled by the values in the CCRA and CCRP registers.

An interrupt flag, one for each of the CCRA and CCRP, will be generated when a compare match occurs from either Comparator A or Comparator P. The PTOC bit in the PTMC1 register is used to select the required polarity of the PWM waveform while the two PTIO1 and PTIO0 bits are used to enable the PWM output or to force the PTM output pin to a fixed high or low level. The PTPOL bit is used to reverse the polarity of the PWM output waveform.

- **16-bit PWM Output Mode, Edge-aligned Mode**

CCRP	1~65535	0
Period	1~65535	65536
Duty	CCRA	

If f_{SYS}=8MHz, TM clock source select $f_{SYS}/4$, CCRP=512 and CCRA=128,

The PTM PWM output frequency=$(f_{SYS}/4)/512=f_{SYS}/2048$=4kHz, duty=128/512=25%,

If the Duty value defined by the CCRA register is equal to or greater than the Period value, then the PWM output duty is 100%.

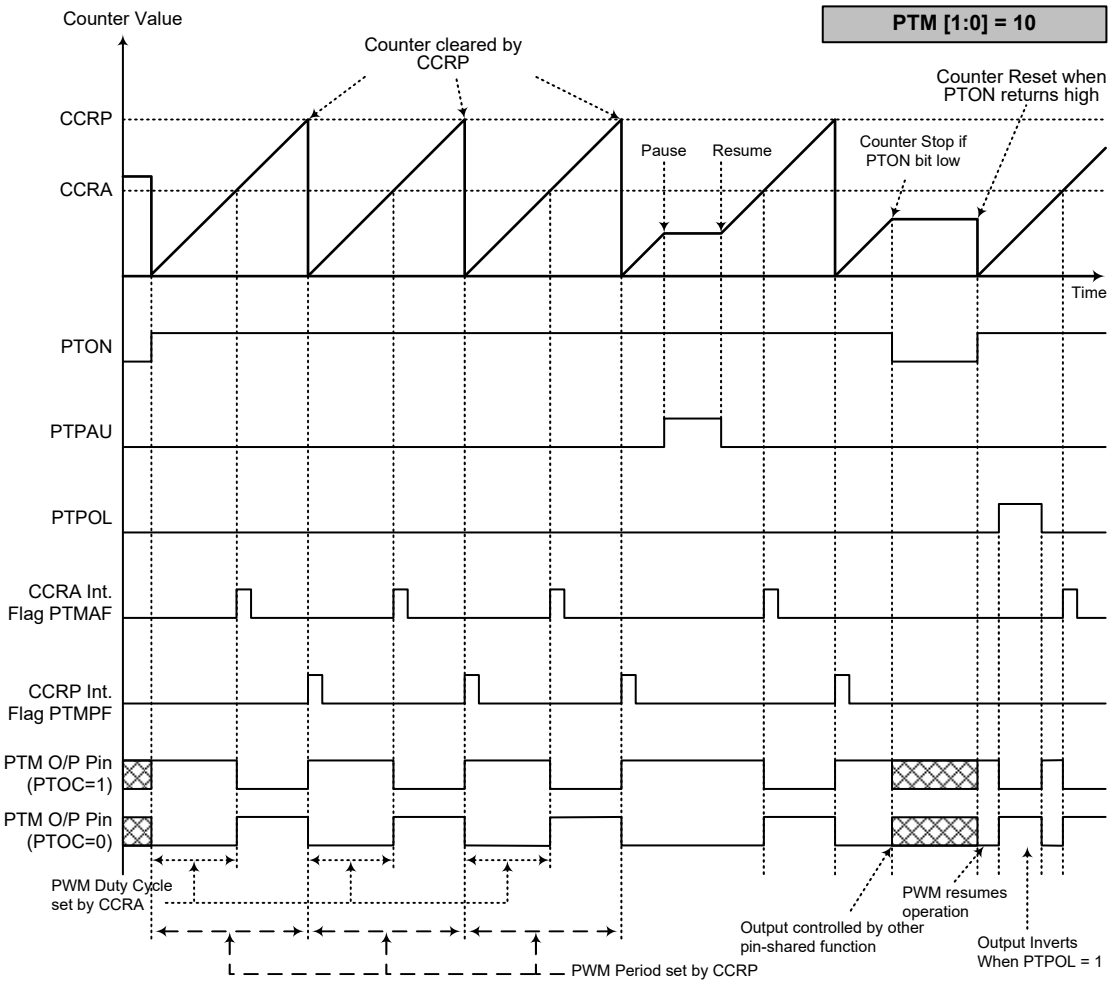

PWM Output Mode

Note: 1. The counter is cleared by CCRP
2. A counter clear sets the PWM Period
3. The internal PWM function continues running even when PTIO[1:0]=00 or 01
4. The PTCCLR bit has no influence on PWM operation

Single Pulse Output Mode

To select this mode, bits PTM1 and PTM0 in the PTMC1 register should be set to 10 respectively and also the PTIO1 and PTIO0 bits should be set to 11 respectively. The Single Pulse Output Mode, as the name suggests, will generate a single shot pulse on the PTM output pin.

The trigger for the pulse output leading edge is a low to high transition of the PTON bit, which can be implemented using the application program. However in the Single Pulse Output mode, the PTON bit can also be made to automatically change from low to high using the external PTCK pin, which will in turn initiate the Single Pulse output. When the PTON bit transitions to a high level, the counter will start running and the pulse leading edge will be generated. The PTON bit should remain high when the pulse is in its active state. The generated pulse trailing edge will be generated when the PTON bit is cleared to zero, which can be implemented using the application program or when a compare match occurs from Comparator A.

However a compare match from Comparator A will also automatically clear the PTON bit and thus generate the Single Pulse output trailing edge. In this way the CCRA value can be used to control the pulse width. A compare match from Comparator A will also generate a PTM interrupt. The counter can only be reset back to zero when the PTON bit changes from low to high when the counter restarts. In the Single Pulse Output Mode, CCRP is not used. The PTCCLR bit is not used in this mode.

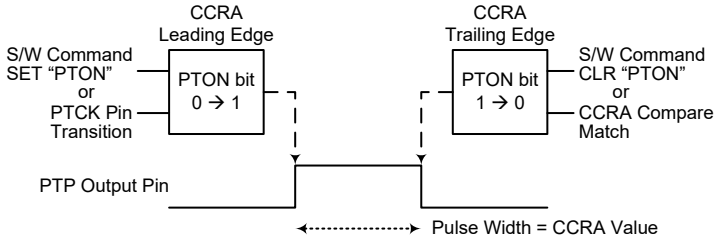

Single Pulse Generation

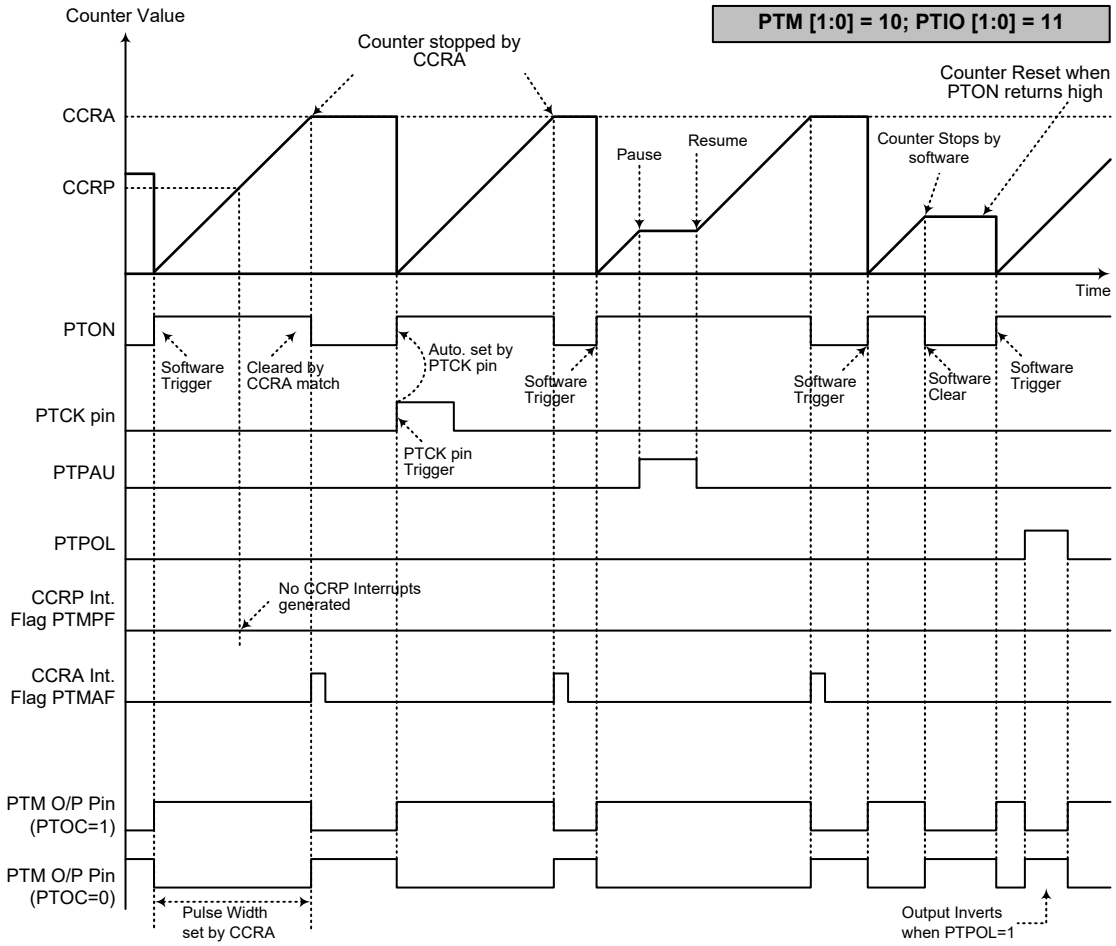

Single Pulse Output Mode

Note: 1. Counter stopped by CCRA
2. CCRP is not used
3. The pulse triggered by the PTCK pin or by setting the PTON bit high
4. A PTCK pin active edge will automatically set the PTON bit high
5. In the Single Pulse Output mode, PTIO[1:0] must be set to “11” and cannot be changed

Capture Input Mode

To select this mode bits PTM1 and PTM0 in the PTMC1 register should be set to 01 respectively. This mode enables external signals to capture and store the present value of the internal counter and can therefore be used for applications such as pulse width measurements. The external signal is supplied on the PTPI or PTCK pin, selected by the PTCAPTS bit in the PTMC1 register. The input pin active edge can be either a rising edge, a falling edge or both rising and falling edges; the active edge transition type is selected using the PTIO1 and PTIO0 bits in the PTMC1 register. The counter is started when the PTON bit changes from low to high which is initiated using the application program.

The PTIO1 and PTIO0 bits decide which active edge transition type to be latched and interrupted. The PTTCLR1 and PTTCLR0 bits decide the condition that the counter reset back to zero. The present counter value latched into CCRA or CCRB is decided by both PTIO1~PTIO0 and PTTCLR1~PTTCLR0 setting. The PTIO1~PTIO0 and PTTCLR1~PTTCLR0 are independent on and uninfluenced each other.

When the required edge transition appears on the PTPI or PTCK pin the present value in the counter will be latched into the CCRA registers or CCRB registers and a PTM interrupt generated. Irrespective of what events occur on the PTPI or PTCK pin the counter will continue to free run until the PTON bit changes from high to low. When a CCRP compare match occurs the counter will reset back to zero; in this way the CCRP value can be used to control the maximum counter value. When a CCRP compare match occurs from Comparator P, a PTM interrupt will also be generated. Counting the number of overflow interrupt signals from the CCRP can be a useful method in measuring long pulse widths. The PTIO1 and PTIO0 bits can select the active trigger edge on the PTPI or PTCK pin to be a rising edge, falling edge or both edge types. If the PTIO1 and PTIO0 bits are both set high, then no capture operation will take place irrespective of what happens on the PTPI or PTCK pin, however it must be noted that the counter will continue to run. The PTCCLR, PTOC and PTPOL bits are not used in this mode.

There are some considerations that should be noted. If PTCK is used as the capture input source, then it cannot be selected as the PTM clock source. If the captured pulse width is less than 2 timer clock periods, it may be ignored by hardware. After the counter value is latched to the CCRA registers or CCRB registers by an active capture edge, the PTMAF flag will be set high after 0.5 timer clock period. The delay time from the active capture edge received to the action of latching counter value to CCRA registers or CCRB registers is less than 1.5 timer clock periods.

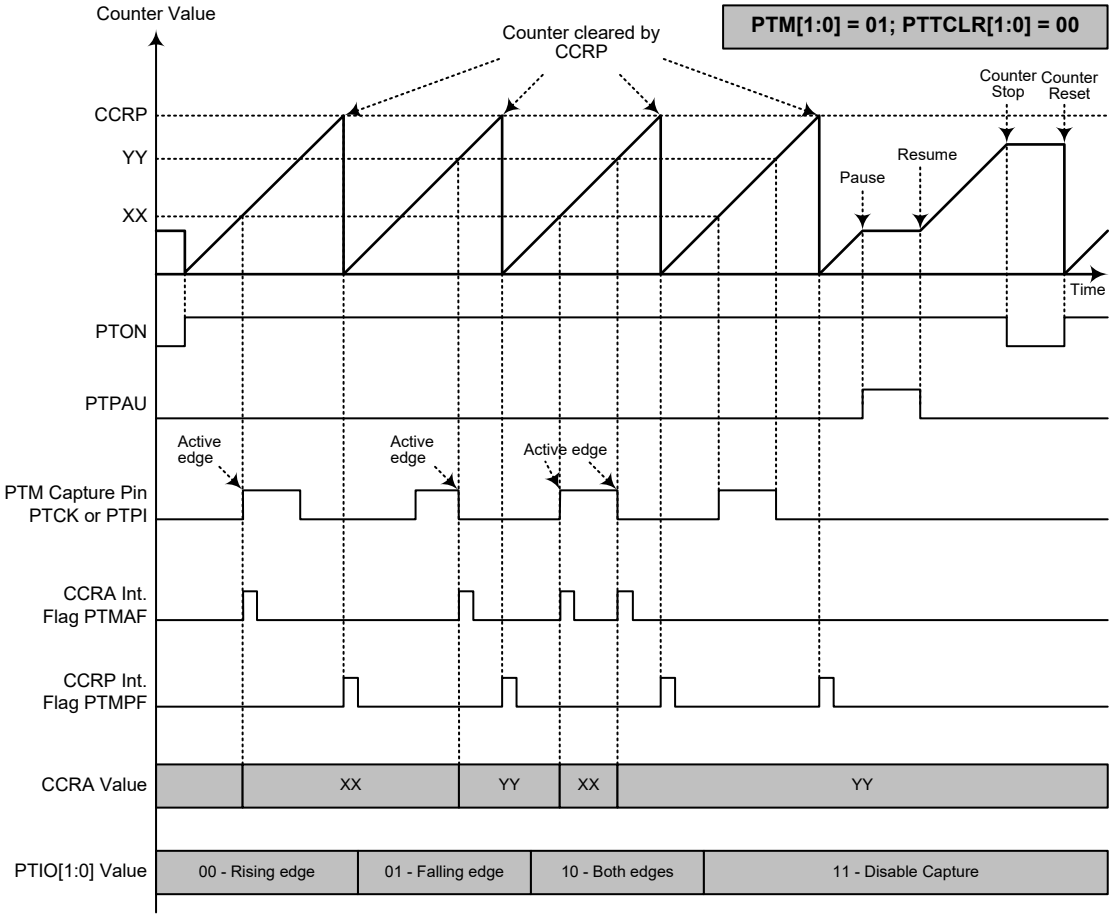

Capture Input Mode – PTTCLR[1:0]=00

Note: 1. PTM[1:0]=01, PTTCLR[1:0]=00 and active edge set by the PTIO[1:0] bits
2. A PTM Capture input active edge transfers the counter value to CCRA
3. Comparator P match will clear the counter
4. PTCCLR bit is not used
5. No output function – PTOC and PTPOL bits are not used
6. CCRP determines the counter value and the counter has a maximum count value when CCRP is equal to zero
7. Ignore the PTVLF bit status when PTTCLR[1:0]=00
8. The capture input mode cannot be used if the selected PTM counter clock is not available

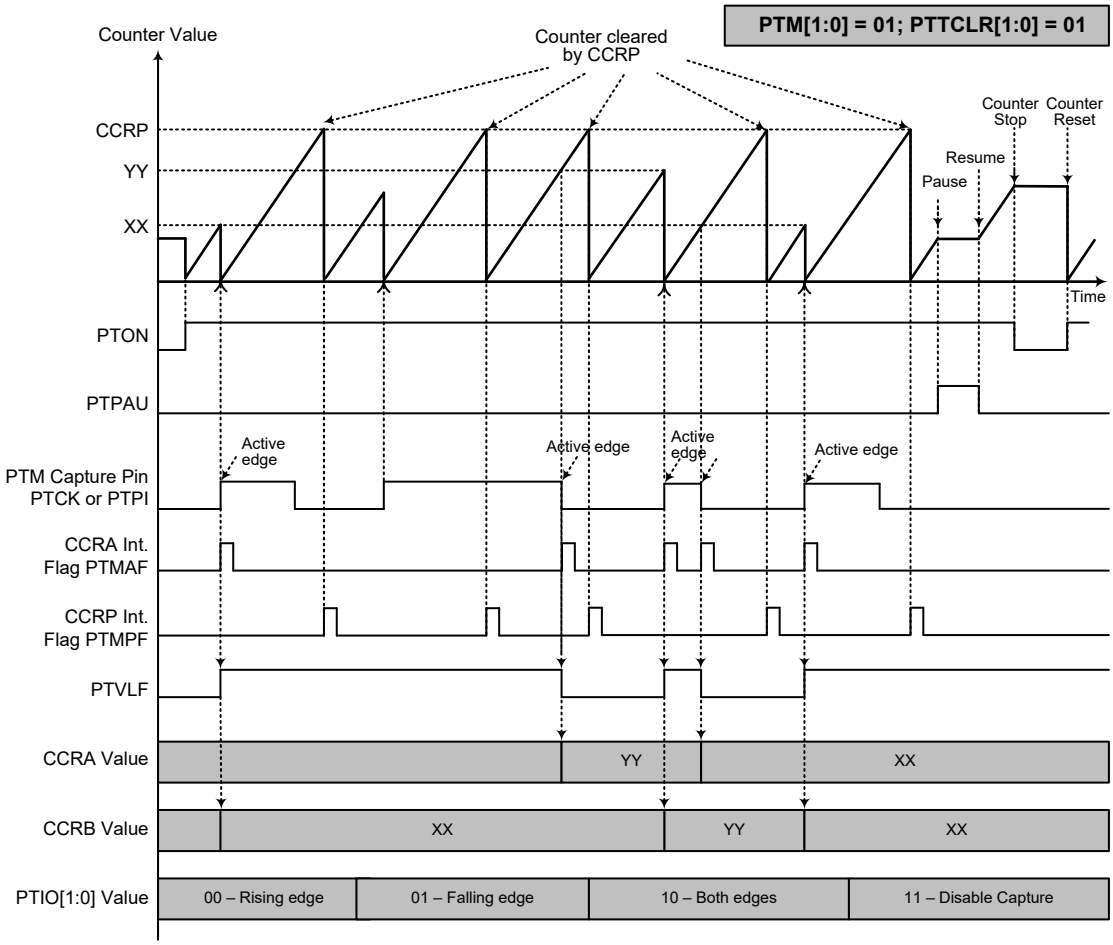

Capture Input Mode – PTTCLR[1:0]=01

Note: 1. PTM[1:0]=01, PTTCLR[1:0]=01 and active edge set by the PTIO[1:0] bits
2. A PTM Capture input active edge transfers the counter value to CCRA or CCRB
3. Comparator P match or PTM capture input pin rising edge will clear the counter
4. PTCCLR bit is not used
5. No output function – PTOC and PTPOL bits are not used
6. CCRP determines the counter value and the counter has a maximum count value when CCRP is equal to zero
7. The capture input mode cannot be used if the selected PTM counter clock is not available

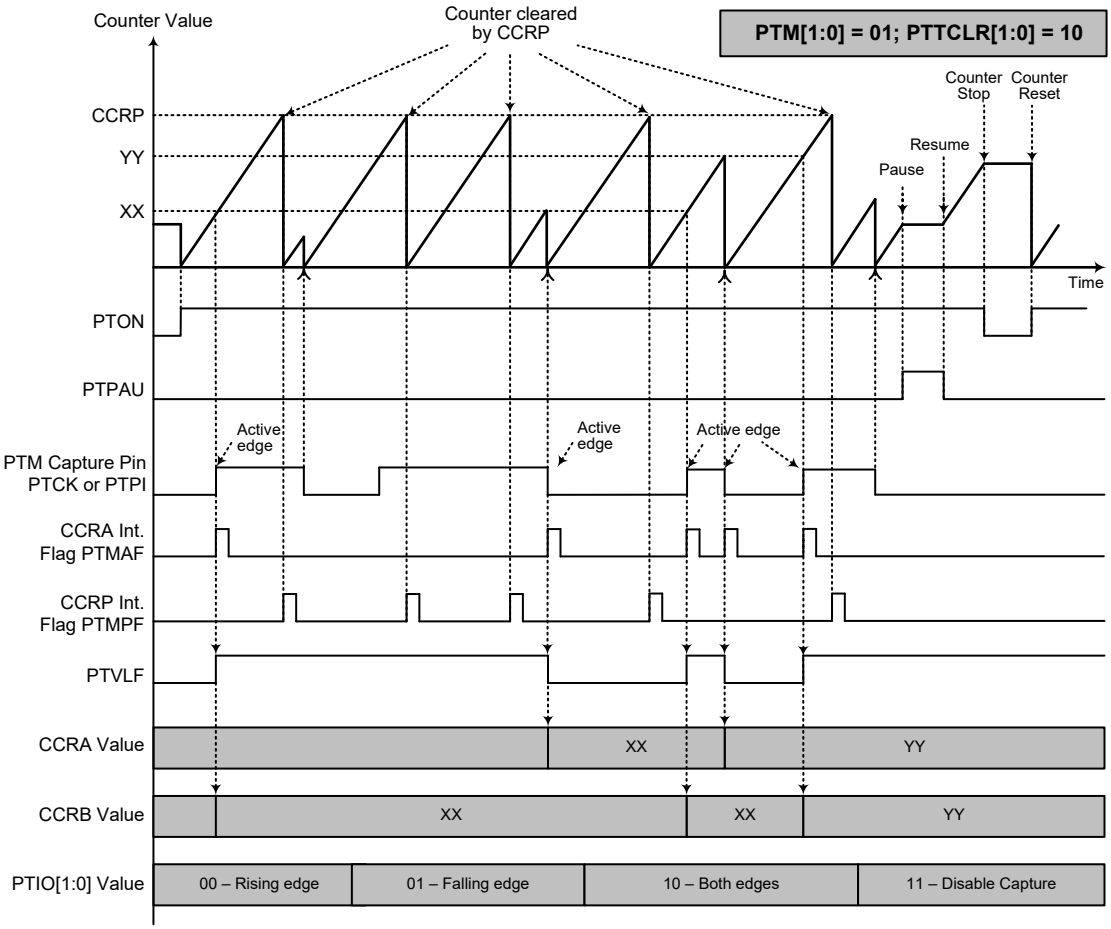

Capture Input Mode – PTTCLR[1:0]=10

Note: 1. PTM[1:0]=01, PTTCLR[1:0]=10 and active edge set by the PTnIO[1:0] bits
2. A PTM Capture input active edge transfers the counter value to CCRA or CCRB
3. Comparator P match or PTM capture input pin falling edge will clear the counter
4. PTCCLR bit is not used
5. No output function – PTOC and PTPOL bits are not used
6. CCRP determines the counter value and the counter has a maximum count value when CCRP is equal to zero
7. The capture input mode cannot be used if the selected PTM counter clock is not available

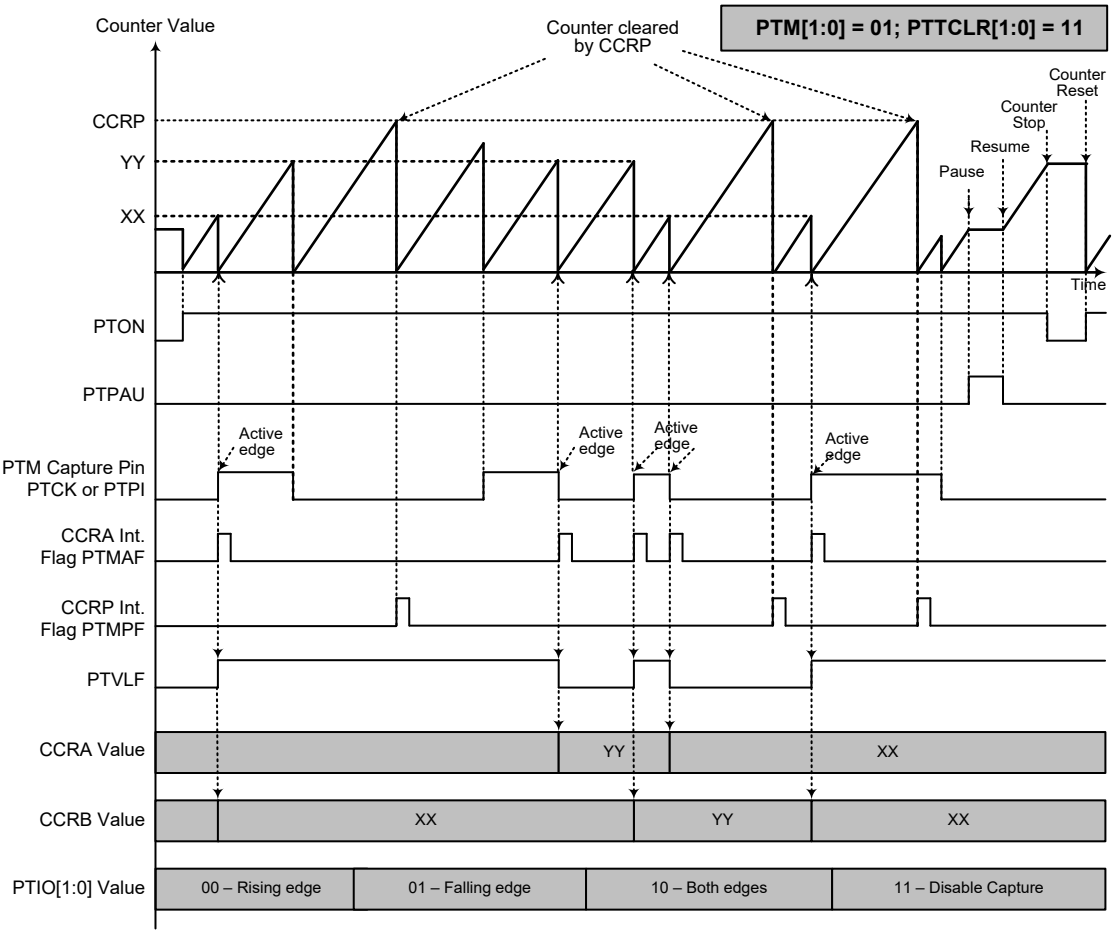

Capture Input Mode – PTTCLR[1:0]=11

Note: 1. PTM[1:0]=01, PTTCLR[1:0]=11 and active edge set by the PTnIO[1:0] bits
2. A PTM Capture input active edge transfers the counter value to CCRA or CCRB
3. Comparator P match or PTM capture input pin rising or falling edge will clear the counter
4. PTCCLR bit is not used
5. No output function – PTOC and PTPOL bits are not used
6. CCRP determines the counter value and the counter has a maximum count value when CCRP is equal to zero
7. The capture input mode cannot be used if the selected PTM counter clock is not available

Pulse Width Modulator

The device includes a 16-bit PWM control circuit, which is composed of PWM counter citcuit. The PWM counter circuit is used to generate a PWM output signal which has an adjustable PWM duty.

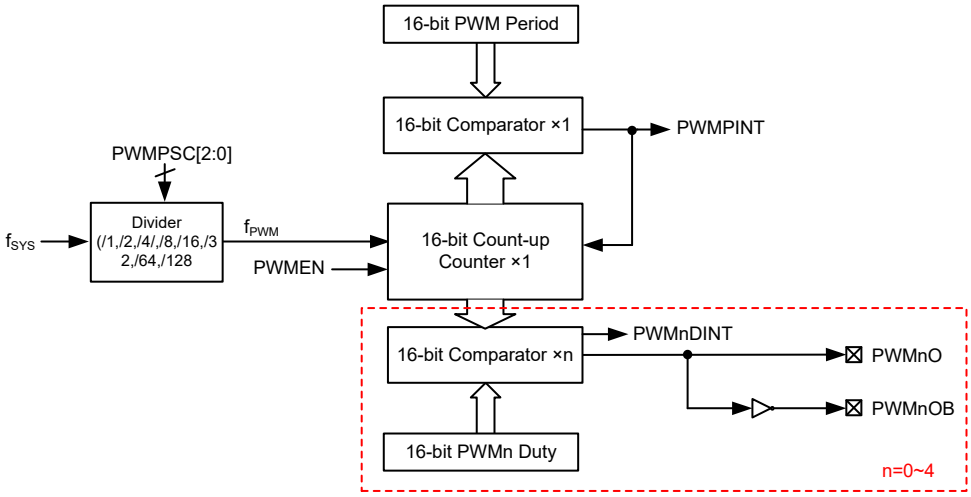

16-bit PWM Control Circuit Block Diagram

Note: The PWM0OB and PWM1O pins are not available.

PWM Counter Control Circuit

The device includes a 16-bit PWM generator. The duty cycle and frequency of the PWM signal can be adjusted by programming 16-bit data into the corresponding PWM duty and period control registers.

PWM Register Description

The PWMC register is used to control the PWM enable/disable and determine the PWM prescaler selection. The PWMPL/PWMPH and PWMnDL/PWMnDH register pairs are used to setup the PWM output frequency and duty respectively.

When writing data to the 16-bit registers, PWMPL/PWMPH and PWMnDL/PWMnDH, the low byte must be written before the high byte is written. When reading data from these registers, the high byte must be read before the low byte is read. The written PWMnD/PWMP content will take effect in the new cycle.

The 16-bit PWM generator provides two interrupt signals, namely PWMnDINT and PWMPINT. The PWMDINT interrupt signal will be triggered when the PWM counter value is the same as the PWMnD value. When the PWM counter value is equal to the PWMP value, the PWM counter will be cleared and the PWMPINT interrupt signal will be triggered. The corresponding timing diagram is shown as follows.

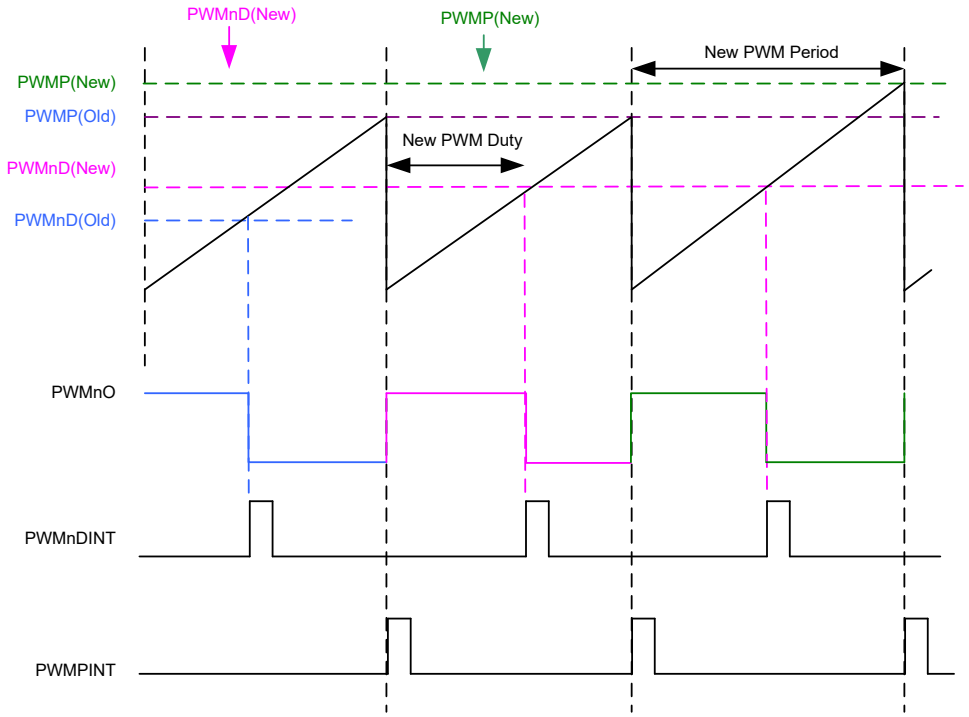

PWM Timing Diagram

The PWMnO Period and Duty calculating formula is as follows:

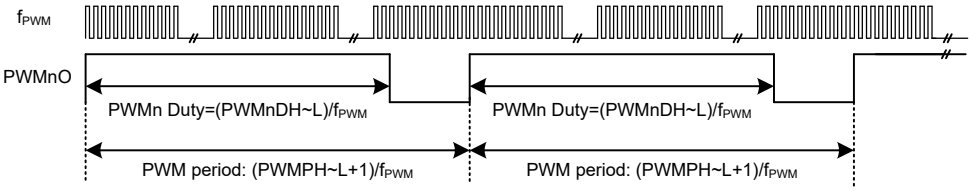

Note: The PWMPH and PWMPL registers cannot be set as 00H at the same time.

Register Name	Bit							
	7	6	5	4	3	2	1	0
PWMC	PWMEN	—	—	—	—	PWMPSC2	PWMPSC1	PWMPSC0
PWMPL	D7	D6	D5	D4	D3	D2	D1	D0
PWMPH	D15	D14	D13	D12	D11	D10	D9	D8
PWMCL	D7	D6	D5	D4	D3	D2	D1	D0
PWMCH	D15	D14	D13	D12	D11	D10	D9	D8
PWM0DL	D7	D6	D5	D4	D3	D2	D1	D0
PWM0DH	D15	D14	D13	D12	D11	D10	D9	D8
PWM1DL	D7	D6	D5	D4	D3	D2	D1	D0
PWM1DH	D15	D14	D13	D12	D11	D10	D9	D8
PWM2DL	D7	D6	D5	D4	D3	D2	D1	D0
PWM2DH	D15	D14	D13	D12	D11	D10	D9	D8
PWM3DL	D7	D6	D5	D4	D3	D2	D1	D0
PWM3DH	D15	D14	D13	D12	D11	D10	D9	D8
PWM4DL	D7	D6	D5	D4	D3	D2	D1	D0
PWM4DH	D15	D14	D13	D12	D11	D10	D9	D8

PWM Register List

• **PWMC Register**

Bit	7	6	5	4	3	2	1	0
Name	PWMEN	—	—	—	—	PWMPSC2	PWMPSC1	PWMPSC0
R/W	R/W	—	—	—	—	R/W	R/W	R/W
POR	0	—	—	—	—	0	0	0

Bit 7 **PWMEN**: PWM enable control
0: Disable
1: Enable

Bit 6~3 Unimplemented, read as "0"

Bit 2~0 **PWMPSC2~PWMPSC0**: PWM prescaler clock source f_{PWM} selection
000: f_{SYS}
001: $f_{SYS}/2$
010: $f_{SYS}/4$
011: $f_{SYS}/8$
100: $f_{SYS}/16$
101: $f_{SYS}/32$
110: $f_{SYS}/64$
111: $f_{SYS}/128$

• **PWMDnL Register (n=0~4)**

Bit	7	6	5	4	3	2	1	0
Name	D7	D6	D5	D4	D3	D2	D1	D0
R/W	R/W	R/W	R/W	R/W	R/W	R/W	R/W	R/W
POR	0	0	0	0	0	0	0	0

Bit 7~0 **D7~D0**: PWM duty low byte register bit 7 ~ bit 0

• **PWMDnH Register (n=0~4)**

Bit	7	6	5	4	3	2	1	0
Name	D15	D14	D13	D12	D11	D10	D9	D8
R/W	R/W	R/W	R/W	R/W	R/W	R/W	R/W	R/W
POR	0	0	0	0	0	0	0	0

Bit 7~0 **D15~D8**: PWM duty high byte register bit 7 ~ bit 0

PWM Period = $(PWMPH\sim L+1)/f_{PWM}$ (the PWMPH and PWMPL registers cannot be set as 00H at the same time)

PWMn Duty = $PWMnDH\sim L/f_{PWM}$

Note: When the PWMnDL and PWMnDH registers are modified, the changed will be reflected in the PWMnO output signal in the next period.

• **PWMPL Register**

Bit	7	6	5	4	3	2	1	0
Name	D7	D6	D5	D4	D3	D2	D1	D0
R/W	R/W	R/W	R/W	R/W	R/W	R/W	R/W	R/W
POR	0	0	0	0	0	0	0	0

Bit 7~0 **D7~D0**: PWM period low byte register bit 7 ~ bit 0

• **PWMPH Register**

Bit	7	6	5	4	3	2	1	0
Name	D15	D14	D13	D12	D11	D10	D9	D8
R/W	R/W	R/W	R/W	R/W	R/W	R/W	R/W	R/W
POR	0	0	0	0	0	0	0	0

Bit 7~0 **D15~D8**: PWM period high byte register bit 7 ~ bit 0

PWM Period = (PWMPH~L+1)/f_{PWM} (the PWMPH and PWMPL registers cannot be set as 00H at the same time)

PWMn Duty = PWMnDH~L/f_{PWM}

Note: When the PWMPL and PWMPH registers are modified, the result will be reflected in the PWMnO output signal in the next period.

• **PWMCL Register**

Bit	7	6	5	4	3	2	1	0
Name	D7	D6	D5	D4	D3	D2	D1	D0
R/W	R/W	R/W	R/W	R/W	R/W	R/W	R/W	R/W
POR	0	0	0	0	0	0	0	0

Bit 7~0 **D7~D0**: PWM counter low byte register bit 7 ~ bit 0

• **PWMCH Register**

Bit	7	6	5	4	3	2	1	0
Name	D15	D14	D13	D12	D11	D10	D9	D8
R/W	R/W	R/W	R/W	R/W	R/W	R/W	R/W	R/W
POR	0	0	0	0	0	0	0	0

Bit 7~0 **D15~D8**: PWM counter high byte register bit 7 ~ bit 0

Analog to Digital Converter

The need to interface to real world analog signals is a common requirement for many electronic systems. However, to properly process these signals by a microcontroller, they must first be converted into digital signals by A/D converters. By integrating the A/D conversion electronic circuitry into the microcontroller, the need for external components is reduced significantly with the corresponding follow-on benefits of lower costs and reduced component space requirements.

A/D Converter Overview

The device contains a multi-channel 12-bit analog to digital converter which can directly interface to external analog signals, such as that from sensors or other control signals and convert these signals directly into a 12-bit digital value. It also can convert the internal signals, such as the bandgap reference voltage V_{BG}, into a 12-bit digital value. The external or internal analog signal to be converted is determined by the SAINS2~SAINS0 bits together with the SACS3~SACS0 bits. Note that when the internal analog signal is to be converted using the SAINS bit field, the external channel analog input will be automatically be switched off. More detailed information about the A/D input signal is described in the “A/D Converter Control Registers” and “A/D Converter Input Signals” sections respectively.

External Input Channels	Internal Signal	A/D Signal Select
5: AN1~AN4, AN7	2: V_{BG}, AV_{SS}	SAINS2~SAINS0, SACS3~SACS0

The accompanying block diagram shows the internal structure of the A/D converter together with its associated registers and control bits.

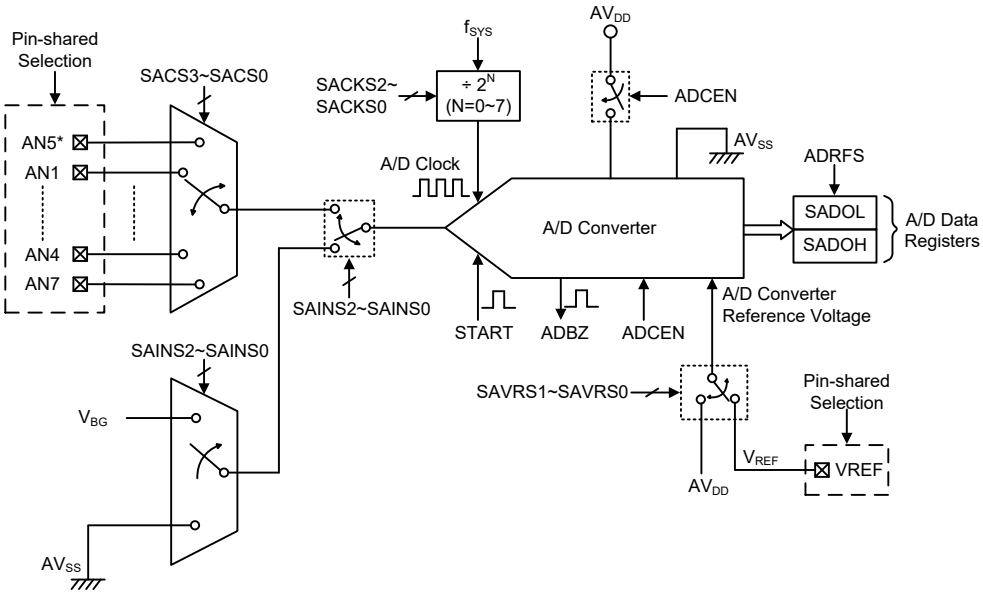

A/D Converter Structure

Note: The PA6/AN5 line is internally connected to the Linear Charger FN. When the FN reference voltage output requires to be connected to the AN5 for reading, the PAS15~PAS14 bits should be set to "11" to select the AN5 function.

A/D Converter Register Description

Overall operation of the A/D converter is controlled using five registers. A read only register exists to store the A/D Converter data 12-bit value. The remaining two registers, SADC0 and SADC1, are control registers which set the operating conditions and control function of the A/D converter.

Register Name	Bit							
	7	6	5	4	3	2	1	0
SADOL (ADRFS=0)	D3	D2	D1	D0	—	—	—	—
SADOL (ADRFS=1)	D7	D6	D5	D4	D3	D2	D1	D0
SADOH (ADRFS=0)	D11	D10	D9	D8	D7	D6	D5	D4
SADOH (ADRFS=1)	—	—	—	—	D11	D10	D9	D8
SADC0	START	ADBZ	ADCEN	ADRFS	SACS3	SACS2	SACS1	SACS0
SADC1	SAINS2	SAINS1	SAINS0	SAVRS1	SAVRS0	SACKS2	SACKS1	SACKS0

A/D Converter Register List

A/D Converter Data Register – SADOL, SADOH

As the device contains an internal 12-bit A/D converter, it requires two data registers to store the converted value. These are a high byte register, known as SADOH, and a low byte register, known as SADOL. After the conversion process takes place, these registers can be directly read by the microcontroller to obtain the digitised conversion value. As only 12 bits of the 16-bit register space is utilised, the format in which the data is stored is controlled by the ADRFS bit in the SADC0 register as shown in the accompanying table. D0~D11 are the A/D conversion result data bits.

Any unused bits will be read as zero. The A/D data registers contents will be unchanged if the A/D converter is disabled.

ADRFS	SADOH								SADOL							
	7	6	5	4	3	2	1	0	7	6	5	4	3	2	1	0
0	D11	D10	D9	D8	D7	D6	D5	D4	D3	D2	D1	D0	0	0	0	0
1	0	0	0	0	D11	D10	D9	D8	D7	D6	D5	D4	D3	D2	D1	D0

A/D Converter Data Register

A/D Converter Control Registers – SADC0, SADC1

To control the function and operation of the A/D converter, two control registers known as SADC0 and SADC1 are provided. These 8-bit registers define functions such as the selection of which analog channel is connected to the internal A/D converter, the digitised data format, the A/D clock source as well as controlling the start function and monitoring the A/D converter busy status. As the device contains only one actual analog to digital converter hardware circuit, each of the external or internal analog signal inputs must be routed to the converter. The SACS3~SACS0 bits in the SADC0 register are used to determine which external channel input is selected to be converted. The SAINS2~SAINS0 bits in the SADC1 register are used to determine that the analog signal to be converted comes from the internal analog signal or external analog channel input.

The relevant pin-shared function selection bits determine which pins on I/O Ports are used as analog inputs for the A/D converter input and which pins are not to be used as the A/D converter input. When the pin is selected to be an A/D input, its original function whether it is an I/O or other pinshared function will be removed. In addition, any internal pull-high resistor connected to the pin will be automatically removed if the pin is selected to be an A/D converter input.

- **SADC0 Register**

Bit	7	6	5	4	3	2	1	0
Name	START	ADBZ	ADCEN	ADRFS	SACS3	SACS2	SACS1	SACS0
R/W	R/W	R	R/W	R/W	R/W	R/W	R/W	R/W
POR	0	0	0	0	0	0	0	0

Bit 7 **START**: Start the A/D Conversion
0→1→0: Start
This bit is used to initiate an A/D conversion process. The bit is normally low but if set high and then cleared low again, the A/D converter will initiate a conversion process.

Bit 6 **ADBZ**: A/D Converter busy flag
0: No A/D conversion is in progress
1: A/D conversion is in progress
This read only flag is used to indicate whether the A/D conversion is in progress or not. When the START bit is set from low to high and then to low again, the ADBZ flag will be set to 1 to indicate that the A/D conversion is initiated. The ADBZ flag will be cleared to 0 after the A/D conversion is complete.

Bit 5 **ADCEN**: A/D Converter function enable control
0: Disable
1: Enable
This bit controls the A/D internal function. This bit should be set to one to enable the A/D converter. If the bit is cleared to zero, then the A/D converter will be switched off reducing the device power consumption. When the A/D converter function is disabled, the contents of the A/D data register pair known as SADOH and SADOL will be unchanged.

Bit 4 **ADRFS**: A/D conversion data format selection
0: A/D converter data format → SADOH=D[11:4]; SADOL=D[3:0]
1: A/D converter data format → SADOH=D[11:8]; SADOL=D[7:0]
This bit controls the format of the 12-bit converted A/D value in the two A/D data registers. Details are provided in the A/D converter data register section.

Bit 3~0 **SACS3~SACS0**: A/D converter external analog input channel selection
0000: Reserved
0001: AN1
0010: AN2
0011: AN3
0100: AN4
0101: AN5 line
0110: Reserved
0111: AN7
1000~1111: Non-existed channel, input floating if selected
Note: The PA6/AN5 line is internally connected to the Linear Charger FN.

- **SADC1 Register**

Bit	7	6	5	4	3	2	1	0
Name	SAINS2	SAINS1	SAINS0	SAVRS1	SAVRS0	SACKS2	SACKS1	SACKS0
R/W	R/W	R/W	R/W	R/W	R/W	R/W	R/W	R/W
POR	0	0	0	0	0	0	0	0

Bit 7~5 **SAINS2~SAINS0**: A/D converter input signal selection
000: External source – External analog channel input, ANn
001: Internal source – Internal bandgap reference voltage, V_{BG}
010~100: Internal source – Connected to the ground, AV_{SS}
101~111: External source – External analog channel input, ANn
When the internal analog signal is selected to be converted, the external channel input signal will automatically be switched off regardless of the SACS bit field value. It will prevent the external channel input from being connected together with the internal analog signal.

Bit 4~3 **SAVRS1~SAVRS0**: A/D converter reference voltage selection
00: From external VREF pin
01: Internal A/D converter power, AV_{DD}
1x: From external VREF pin
These bits are used to select the A/D converter reference voltage. When the internal reference voltage source is selected, the reference voltage derived from the external VREF pin will automatically be switched off.

Bit 2~0 **SACKS2~SACKS0**: A/D conversion clock source selection
000: Reserved, cannot be used
001: $f_{SYS}/2$
010: $f_{SYS}/4$
011: $f_{SYS}/8$
100: $f_{SYS}/16$
101: $f_{SYS}/32$
110: $f_{SYS}/64$
111: $f_{SYS}/128$

A/D Converter Operation

The START bit in the SADC0 register is used to start the AD conversion. When the microcontroller sets this bit from low to high and then low again, an analog to digital conversion cycle will be initiated.

The ADBZ bit in the SADC0 register is used to indicate whether the analog to digital conversion process is in progress or not. This bit will be automatically set to 1 by the microcontroller after an

A/D conversion is successfully initiated. When the A/D conversion is complete, the ADBZ bit will be cleared to 0. In addition, the corresponding A/D interrupt request flag in the interrupt control register will be set, and an internal A/D interrupt signal will be generated. If the A/D interrupt is enabled, this A/D internal interrupt signal will direct the program flow to the associated A/D internal interrupt address for processing. If the A/D internal interrupt is disabled, the microcontroller can poll the ADBZ bit in the SADC0 register to check whether it has been cleared as an alternative method of detecting the end of an A/D conversion cycle.

The clock source for the A/D converter, which originates from the system clock f_{SYS}, can be chosen to be either f_{SYS} or a subdivided version of f_{SYS}. The division ratio value is determined by the SACKS2~SACKS0 bits in the SADC1 register. Although the A/D clock source is determined by the system clock f_{SYS} and by bits SACKS2~SACKS0, there are some limitations on the A/D clock source speed that can be selected. As the recommended range of permissible A/D clock period, t_{ADCK}, for different situations is specified in the "A/D Converter Electrical Characteristics", care must be taken for system clock frequencies. For example, when the t_{ADCK} is from 0.5μs to 10μs at $2.5V \leq V_{DD} \leq 4.2V$, if the system clock operates at a frequency of 8MHz, the SACKS2~SACKS0 bits should not be set to "000", "001" or "111". Doing so will give A/D clock periods that are less than the minimum A/D clock period or greater than the maximum A/D clock period which may result in inaccurate A/D conversion values. Refer to the following table for examples, where values marked with an asterisk * show where, special care must be taken, as the values may be beyond the specified A/D Clock Period range.

f_{SYS}	A/D Clock Period (t_{ADCK})							
	SACKS[2:0] =000 (f_{SYS})	SACKS[2:0] =001 (f_{SYS}/2)	SACKS[2:0] =010 (f_{SYS}/4)	SACKS[2:0] =011 (f_{SYS}/8)	SACKS[2:0] =100 (f_{SYS}/16)	SACKS[2:0] =101 (f_{SYS}/32)	SACKS[2:0] =110 (f_{SYS}/64)	SACKS[2:0] =111 (f_{SYS}/128)
1MHz	1μs	2μs	4μs	8μs	16μs*	32μs*	64μs*	128μs*
2MHz	500ns	1μs	2μs	4μs	8μs	16μs*	32μs*	64μs*
4MHz	250ns*	500ns	1μs	2μs	4μs	8μs	16μs*	32μs*
8MHz	125ns*	250ns*	500ns	1μs	2μs	4μs	8μs	16μs*
12MHz	83ns*	167ns*	333ns*	667ns	1.33μs	2.67μs	5.33μs	10.67μs*
16MHz	62.5ns*	125ns*	250ns*	500ns	1μs	2μs	4μs	8μs

A/D Clock Period Examples

Controlling the power on/off function of the A/D converter circuitry is implemented using the ADCEN bit in the SADC0 register. This bit must be set high to power on the A/D converter. When the ADCEN bit is set high to power on the A/D converter internal circuitry, a certain delay, as indicated in the timing diagram, must be allowed before an A/D conversion is initiated. Even if no pins are selected for use as A/D inputs by configuring the relevant pin-shared control bits, if the ADCEN bit is high, then some power will still be consumed. In power conscious applications it is therefore recommended that the ADCEN is set low to reduce power consumption when the A/D converter function is not being used.

A/D Converter Reference Voltage

The reference voltage supply to the A/D converter can be supplied from the power supply AV_{DD}, or from an external reference source supplied on pin VREF. The desired selection is made using the SAVRS1~SAVRS0 bits. When the SAVRS bit field is set to "01", the A/D converter reference voltage will come from the AV_{DD}. Otherwise, if the SAVRS bit field is set to any other value except "01", the A/D converter reference voltage will come from the VREF pin. As the VREF pin is pinshared with other functions, when the VREF pin is selected as the reference voltage supply pin, the VREF pin-shared function control bit should be properly configured to disable other pin function. However, if the internal A/D converter power AV_{DD} is selected as the reference voltage,

the VREF pin must not be configured as the reference voltage input function to avoid the internal connection between the VREF pin and the power supply. The analog input values must not be allowed to exceed the value of the selected A/D reference voltage.

A/D Converter Input Signals

All the external A/D analog channel input pins are pin-shared with the I/O pins as well as other functions. The corresponding control bits for each A/D external input pin in the PxSn registers determine whether the input pins are setup as A/D converter analog input channel or whether they have other functions. If the pin is setup to be as an A/D analog channel input, the original pin functions will be disabled. In this way, pins can be changed under program control to change their function between A/D inputs and other functions. All pull high resistors, which are setup through register programming, will be automatically disconnected if the pins are setup as A/D inputs. Note that it is not necessary to first setup the A/D pin as an input in the port control register to enable the A/D input as when the pin-shared function control bits enable an A/D input, the status of the port control register will be overridden.

There are some internal analog signals derived from the bandgap reference voltage, V_{BG}, which can be connected to the A/D converter as the analog input signal by configuring the SAINS2~SAINS0 bits. If the external channel input is selected to be converted, the SAINS2~SAINS0 bits should be set to “000” or “101~111” and the SACS3~SACS0 bits can determine which external channel is selected. If the internal analog signal is selected to be converted, the external channel signal input will automatically be switched off regardless of the SACS field value. It will prevent the external channel input from being connected together with the internal analog signal.

SAINS[2:0]	SACS[3:0]	Input Signals	Description
000, 101~111	0001~0100, 0111	AN1~AN4, AN7	External channel analog input ANn
	1000~1111	—	Non-existed channel, input is floating
001	xxxx	V_{BG}	Internal Bandgap reference voltage
010~100	xxxx	AV_{SS}	Connected to the ground

A/D Converter Input Signal Selection

Conversion Rate and Timing Diagram

A complete A/D conversion contains two parts, data sampling and data conversion. The data sampling which is defined as t_{ADS} takes 4 A/D clock periods and the data conversion takes 12 A/D clock periods. Therefore a total of 16 A/D clock periods for an analog signal A/D conversion which is defined as t_{ADC} are necessary.

Maximum single A/D conversion rate = 1/(A/D clock period×16)

The accompanying diagram shows graphically the various stages involved in an external channel input signal analog to digital conversion process and its associated timing. After an A/D conversion process has been initiated by the application program, the microcontroller internal hardware will begin to carry out the conversion, during which time the program can continue with other functions. The time taken for the A/D conversion is 16 t_{ADCK} where t_{ADCK} is equal to the A/D clock period.

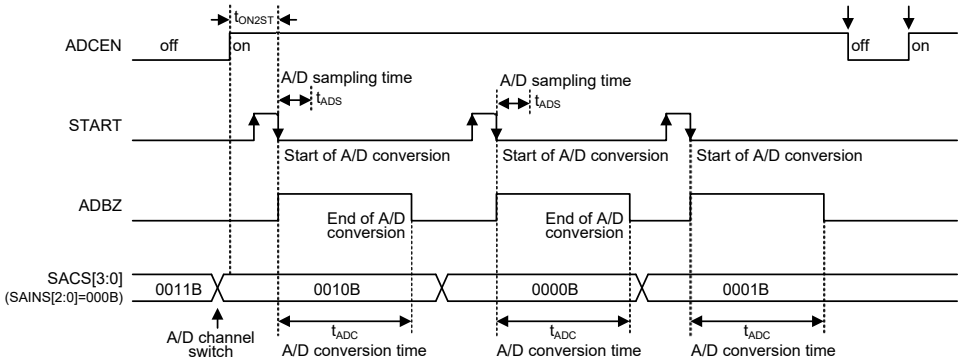

A/D Conversion Timing – External Channel Input

Summary of A/D Conversion Steps

The following summarises the individual steps that should be executed in order to implement an A/D conversion process.

- Step 1

  Select the required A/D conversion clock by properly programming the SACKS2~SACKS0 bits in the SADC1 register.

- Step 2

  Enable the A/D converter by setting the ADCEN bit in the SADC0 register to one.

- Step 3

  Select which signal is to be connected to the internal A/D converter by correctly configuring the SAINS2~SAINS0 bits.

  Select the external channel input to be converted, go to Step 4.

  Select the internal analog signal to be converted, go to Step 5.

- Step 4

  If the A/D input signal comes from the external channel input selected by configuring the SAINS2~SAINS0 bit field, the corresponding pins should be configured as A/D input function by configuring the relevant pin-shared function control bits. The desired analog channel then should be selected by configuring the SACS3~SACS0 bit field. After this step, go to Step 6

- Step 5

  Before the A/D input signal is selected to come from the internal analog signal by configuring the SAINS2~SAINS0 bit field, the corresponding external input pin must be switched to a nonexisted channel input by properly configured the SACS3~SACS0 bits. The desired internal analog signal then can be selected by configuring the SAINS2~SAINS0 bit field. After this step, go to Step 6.

- Step 6

  Select the reference voltage source by configuring the SAVRS1~SAVRS0 bits in the SADC1 register. Care should be taken in this step which can refer to the A/D Converter Reference Voltage section for details.

- Step 7

  Select A/D converter output data format by setting the ADRFS bit in the SADC0 register.

- Step 8

  If A/D conversion interrupt is used, the interrupt control registers must be correctly configured to ensure the A/D interrupt function is active. The master interrupt control bit, EMI, and the A/D conversion interrupt control bit, ADE, must both be set high in advance.

- Step 9

  The A/D conversion procedure can now be initialized by setting the START bit from low to high and then low again.

- Step 10

  If A/D conversion is in progress, the ADBZ flag will be set high. After the A/D conversion process is complete, the ADBZ flag will go low and then the output data can be read from SADOH and SADOL registers.

Note: When checking for the end of the conversion process, if the method of polling the ADBZ bit in the SADC0 register is used, the interrupt enable step above can be omitted.

Programming Considerations

During microcontroller operations where the A/D converter is not being used, the A/D internal circuitry can be switched off to reduce power consumption, by clearing bit ADCEN to zero in the SADC0 register. When this happens, the internal A/D converter circuits will not consume power irrespective of what analog voltage is applied to their input lines. If the A/D converter input lines are used as normal I/Os, then care must be taken as if the input voltage is not at a valid logic level, then this may lead to some increase in power consumption.

A/D Conversion Function

As the device contains a 12-bit A/D converter, its full-scale converted digitised value is equal to FFFH. Since the full-scale analog input value is equal to the actual A/D converter reference voltage, V_{REF}, this gives a single bit analog input value of reference voltage value divided by 4096.

$$1\ LSB = V_{REF}/4096$$

The A/D Converter input voltage value can be calculated using the following equation:

$$\text{A/D input voltage} = \text{A/D output digital value} \times V_{REF} / 4096$$

The diagram shows the ideal transfer function between the analog input value and the digitised output value for the A/D converter. Except for the digitised zero value, the subsequent digitised values will change at a point 0.5 LSB below where they would change without the offset, and the last full scale digitised value will change at a point 1.5 LSB below the V_{REF} level.

Note that here the V_{REF} voltage is the actual A/D converter reference voltage determined by the SAVRS1~SAVRS0 bits.

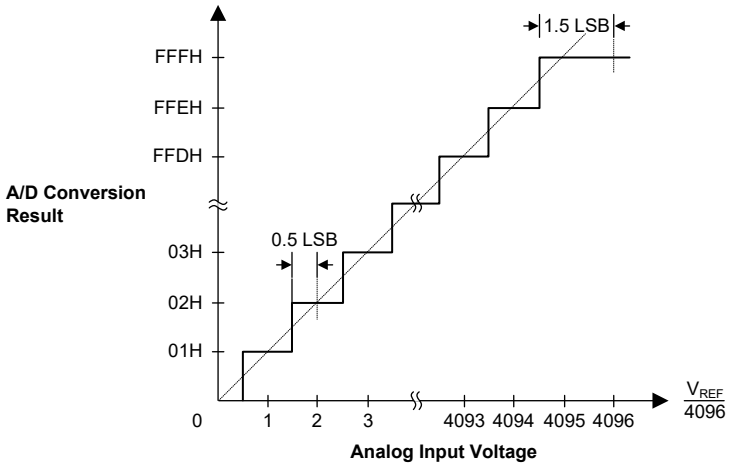

Ideal A/D Transfer Function

A/D Conversion Programming Examples

The following two programming examples illustrate how to set and implement an A/D conversion. In the first example, the method of polling the ADBZ bit in the SADC0 register is used to detect when the conversion cycle is complete, whereas in the second example, the A/D interrupt is used to determine when the conversion is complete.

Example 1: using an ADBZ polling method to detect the end of conversion

```
clr ADE              ; disable ADC interrupt
mov a, 0BH
mov SADC1, a         ; select input signal from external channel input, reference
                     ; voltage from A/D internal power and fSYS/8 as A/D clock
mov a, 0Ch           ; set PBS0 register to configure pin AN1
mov PBS0, a
mov a, 21h           ; enable A/D converter and select AN1 as
mov SADC0, a         ; the A/D external channel input
:
start_conversion:
clr START            ; high pulse on start bit to initiate conversion
set START            ; reset A/D
clr START            ; start A/D
:
polling_EOC:
sz  ADBZ             ; poll the SADC0 register ADBZ bit to detect end of A/D conversion
jmp polling_EOC      ; continue polling
:
mov a, SADOL         ; read low byte conversion result value
mov SADOL_buffer, a  ; save result to user defined register
mov a, SADOH         ; read high byte conversion result value
mov SADOH_buffer, a  ; save result to user defined register
:
jmp start_conversion ; start next A/D conversion
```

Example 2: using the interrupt method to detect the end of conversion

```
clr ADE              ; disable ADC interrupt
mov a, 0BH
mov SADC1, a         ; select input signal from external channel input, reference
                     ; voltage from A/D internal power and fSYS/8 as A/D clock
mov a, 0Ch           ; set PBS0 register to configure pin AN1
mov PBS0, a
mov a, 21h           ; enable A/D converter and select AN1 as
mov SADC0, a         ; the A/D external channel input
:
start_conversion:
clr START            ; high pulse on START bit to initiate conversion
set START            ; reset A/D
clr START            ; start A/D
clr ADF              ; clear ADC interrupt request flag
set ADE              ; enable ADC interrupt
set EMI              ; enable global interrupt
:
:
ADC_ISR:             ; ADC interrupt service routine
mov acc_stack, a     ; save ACC to user defined memory
mov a, STATUS
mov status_stack, a  ; save STATUS to user defined memory
:
mov a, SADOL         ; read low byte conversion result value
mov SADOL_buffer, a  ; save result to user defined register
```

```
mov a, SADOH         ; read high byte conversion result value
mov SADOH_buffer, a  ; save result to user defined register
:
EXIT_INT_ISR:
mov a, status_stack
mov STATUS, a        ; restore STATUS from user defined memory
mov a, acc_stack     ; restore ACC from user defined memory
reti
```

Low Voltage Detector – LVD

The device has a Low Voltage Detector function, also known as LVD. This enables the device to monitor the power supply voltage, V_{DD}, and provide a warning signal should it fall below a certain level. This function may be especially useful in battery applications where the supply voltage will gradually reduce as the battery ages, as it allows an early warning battery low signal to be generated. The Low Voltage Detector also has the capability of generating an interrupt signal.

LVD Register

The Low Voltage Detector function is controlled using a single register with the name LVDC. Three bits in this register, VLVD2~VLVD0, are used to select one of eight fixed voltages below which a low voltage condition will be determined. A low voltage condition is indicated when the LVDO bit is set. If the LVDO bit is low, this indicates that the V_{DD} voltage is above the preset low voltage value. The LVDEN bit is used to control the overall on/off function of the low voltage detector. Setting the bit high will enable the low voltage detector. Clearing the bit to zero will switch off the internal low voltage detector circuits. As the low voltage detector will consume a certain amount of power, it may be desirable to switch off the circuit when not in use, an important consideration in power sensitive battery powered applications.

- **LVDC Register**

Bit	7	6	5	4	3	2	1	0
Name	TLVD1	TLVD0	LVDO	LVDEN	VBGEN	VLVD2	VLVD1	VLVD0
R/W	R/W	R/W	R	R/W	R/W	R/W	R/W	R/W
POR	0	0	0	0	0	0	0	0

Bit 7~6 **TLVD1~TLVD0**: Minimum low voltage width to interrupt time, t_{LVD}, selection
00: $(1\sim2)\times t_{LIRC}$
01: $(3\sim4)\times t_{LIRC}$
10: $(7\sim8)\times t_{LIRC}$
11: $(1\sim2)\times t_{LIRC}$

Bit 5 **LVDO**: LVD Output Flag
0: No Low Voltage Detected
1: Low Voltage Detected

Bit 4 **LVDEN**: Low Voltage Detector Control
0: Disable
1: Enable
In the FAST, SLOW or IDLE mode, the LVD function can be controlled by this bit. However, in the SLEEP mode, the LVD function is always off.

Bit 3 **VBGEN**: Bandgap Buffer Control
0: Disable
1: Enable
Note that the Bandgap circuit is enabled when the LVD or the LVR function is enabled or when the VBGEN bit is set high.

Bit 2~0 **VLVD2~VLVD0**: LVD Voltage Selection
000: 1.8V
001: 2.0V
010: 2.4V
011: 2.7V
100: 3.0V
101: 3.3V
110: 3.6V
111: 4.0V

LVD Operation

The Low Voltage Detector function operates by comparing the power supply voltage, V_{DD}, with a pre-specified voltage level stored in the LVDC register. This has a range of 1.8V~4.0V. When the power supply voltage, V_{DD}, falls below this pre-determined value, the LVDO bit will be set high indicating a low power supply voltage condition. When the device is in the SLEEP mode, the low voltage detector will be disabled even if the LVDEN bit is high. After enabling the Low Voltage Detector, a time delay t_{LVDS} should be allowed for the circuitry to stabilise before reading the LVDO bit. Note also that as the V_{DD} voltage may rise and fall rather slowly, at the voltage near that of V_{LVD}, there may be multiple LVDO bit transitions.

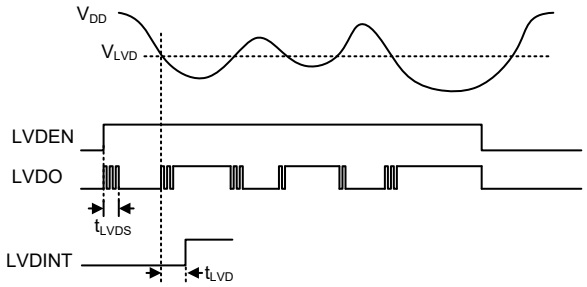

LVD Operation

The Low Voltage Detector also has its own interrupt, providing an alternative means of low voltage detection, in addition to polling the LVDO bit. The interrupt will only be generated after a delay of t_{LVD} after the LVDO bit has been set high by a low voltage condition. In this case, the LVF interrupt request flag will be set, causing an interrupt to be generated if V_{DD} falls below the preset LVD voltage. This will cause the device to wake up from the IDLE Mode, however if the Low Voltage Detector wake-up function is not required then the LVF flag should be first set high before the device enters the IDLE Mode.

High Voltage Linear Charger

Input Voltage Detect

The device integrates an input voltage detect function. The maximum input rating is 20V to overcome unpredictable high voltages from the USB input. The input voltage goes through two switches, both of which will turn on when the V_{IN} is a normal voltage between 4.5V and 7.0V. When the input voltage exceeds 7.0V, the VIN MOSFET will quickly turn off to protect the back-end circuit. When the input voltage is lower than 4V or V_{BAT}+0.1V, the linear charger MOSFET will turn off to prevent VBAT current from flowing back to VIN to reduce V_{BAT} leakage.

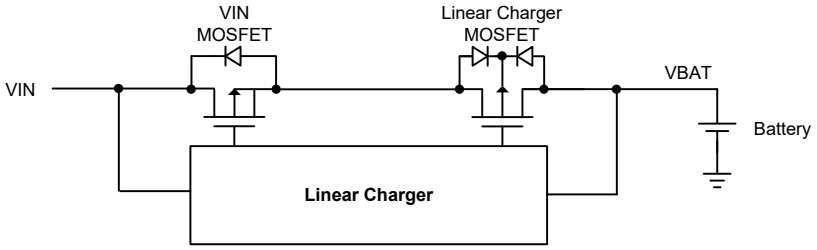

Input Voltage Detection Diagram

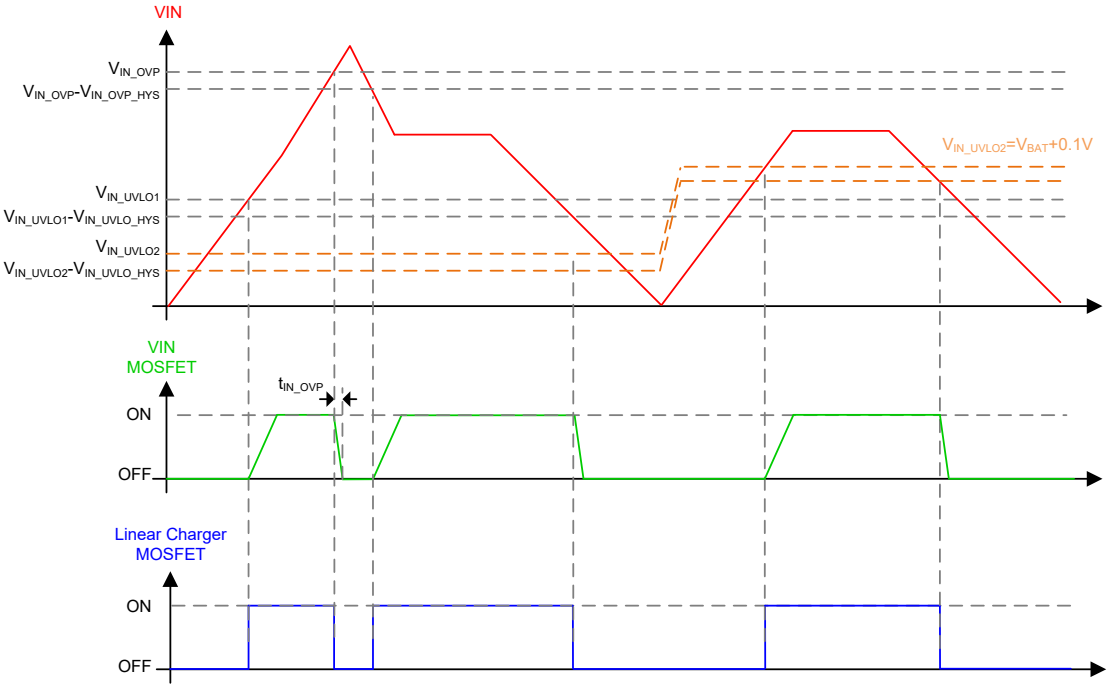

Input Voltage Detection Waveform

Linear Charger

The device integrates a linear charger, the maximum charging current of which can be set to 1A through the ISET pin.

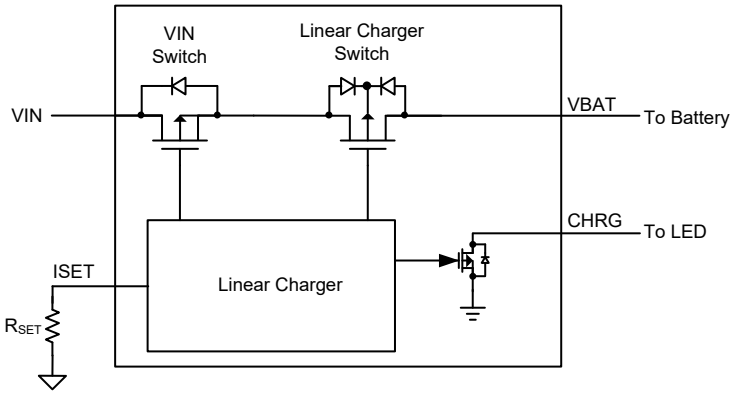

The external resistor, R_{SET}, is used to set the charging current:

$$I_{BAT_CC}\ (\text{Charging Current})=2000/R_{SET}$$

The battery charging cycle curve is shown in the figure below. If the V_{BAT} is lower than V_{BAT_LOW} - $V_{BAT_LOW_HYS}$, the linear charger is in the trickle chargemode and the charging current is $I_{BAT_CC}/10$. Once the V_{BAT} is higher than V_{BAT_LOW}, the constant current charge (CC) mode is applied and the charging current is I_{BAT_CC}. When V_{BAT} has been charged to the battery charging target voltage of $V_{BAT_CV1/2}$, the device enters the constant voltage charge (CV) mode. Once the charging current drops to $I_{BAT_CC}/10$, the device is in a terminated state and stops charging. When V_{BAT} is depleted and falls below the charging voltage of V_{BAT_RECHG}, the device will recharge the battery. When the temperature is higher than the protection temperature during charging, the charging current will automatically reduce, and the device enters the constant temperature charge (CT) mode.

The linear charger has the CHRG open-drain status indication output. When the charger is in a charging status, the CHRG pin is pulled low. When the charger is fully charged, the CHRG outputs a high-impedance state. In other status, the CHRG outputs with a high-impedance state.

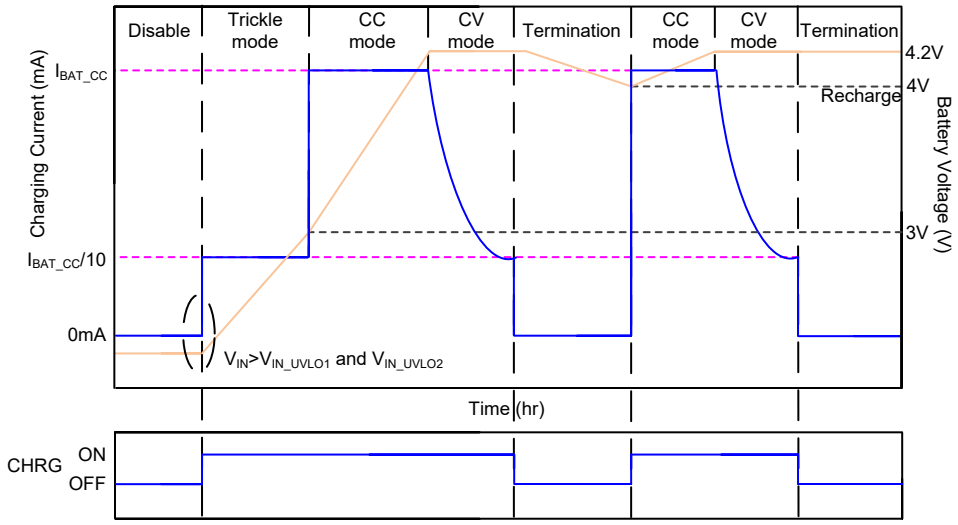

Battery Charging Cycle

When the battery is not installed, the charger will charge the capacitance on the VBAT pin. When the external capacitance of the battery connection terminal BAT is 10μF, the CHRG will flash once every 1~4 seconds.

The linear charger has a temperature control function that automatically reduces the current to prevent temperature increase when the junction temperature exceeds $T_{J(MAX)}$. This means that the

current in the constant current charge mode may be lower than the set I_{BAT_CC}. This feature can protect the device from damage caused by larger charging power and operating environment.

Reference Voltage

The linear charger integrates a reference voltage function. The output of the reference voltage is shared with the FN signal. When the D_VREN is 1, the reference voltage function is enabled and the voltage is output by the FN signal. When the D_VREN is 0, the reference voltage function is disabled and the FN signal is used as other function. The linear charger status will affect the reference voltage function, refer to the "Application Information" section.

Multi-function FN Output Signal

The FN signal contains three functions, VIN status, linear charger status and reference voltage. It is necessary to configure the D_SELFN, D_VREN and D_SELLC via the communication interface to enable the corresponding function.

Two-Line Control			FN Signal Function
D_SELLC	D_VREN	D_SELFN	
x	0	0	VIN status (INOK1)
0	0	1	Floating
1	0	1	Linear charger status
0→1(1)	0	1	<t_{INOK2}: VIN status (INOK2)
			>t_{INOK2}+t_{LCS}: Linear charger status
x	1	x(2)	Reference voltage

"x": Don't care

Note: 1. D_SELLC=1, D_VREN=0 and D_SELFN=1 are configured in the same communication, whereas the D_SELLC was previously cleared to 0.

2. The FN signal function corresponding to the D_SELFN setting is still valid, the appropriate status must be set according to the current conditions to avoid causing an abnormal reference voltage, refer to the "Application Information" section.

Linear Charger Status		
FN Signal Status	VIN Input Voltage Status	Description
Floating or pulled low	Invalid	The linear charger is disabled
Floating	Valid (Note)	The linear charger is disabled
		The linear charger is enabled and charging
Pulled low		The linear charger is enabled and has stopped

Note: Meet the following conditions: $V_{IN_UVLO1}<V_{IN}$, $V_{IN_UVLO2}<V_{IN}$ and $V_{IN}<V_{IN_OVP}$.

VIN Input Voltage Status		
FN Signal Status		Description
INOK1	INOK2	
Floating	Floating	VIN input voltage is invalid
Floating	Pulled low	VIN input voltage is invalid
Pulled low	Floating	VIN input voltage is valid (Note)
Pulled low	Pulled low	VIN input voltage is invalid

Note: Meet the following conditions: $V_{IN_UVLO1}<V_{IN}$, $V_{IN_UVLO2}<V_{IN}$ and $V_{IN}<V_{IN_OVP}$.

In the case of D_SELLC=0, after configuring D_SELLC=1, D_VREN=0 and D_SELFN=1 via the D value shown in the following figure, the FN signal outputs the VIN status (INOK2) and the linear charger status. The linear charger status must be read more than 8 times at intervals of 20μs or more, and then compare the number of different logic statuses, and the logic with more is the read result.

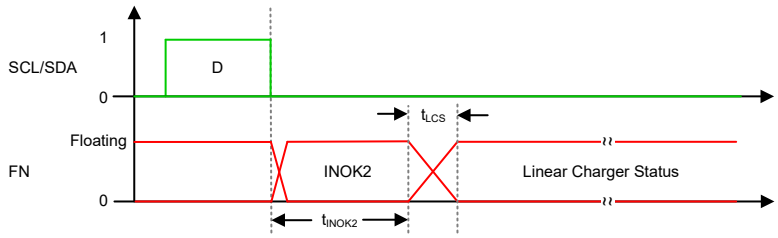

VIN Status (INOK2) and Linear Charger Status

Interface

The linear charger uses the SDA/SCL signal of the two-line communication interface for functional control and status reading with FN signal, which can enable/disable the linear charger and reference voltage function, or directly control the CHRG pin output status, or use the FN signal to read whether the input voltage is valid and whether the battery charged is complete.

The communication code is composed of one start bit, seven data bits, one even parity bit and one stop bit. The code must meet the definition to be effectively written into the linear charger, an incorrect operation will be ignored directly. The communication code requirements are as follows:

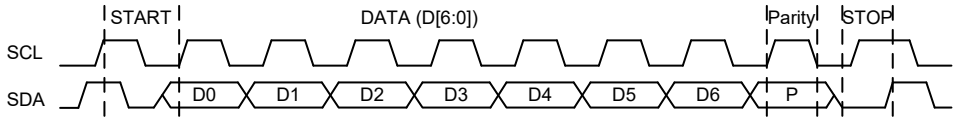

In order to ensure that the linear charger is operated at a correct voltage when powered on, the two-line communication interface is valid after the V_{BAT} is higher than V_{IF_EN}, then the linear charger can be operated via the two-line communication interface. When the V_{BAT} is lower than V_{IF_DIS}, the two-line communication interface will automatically return to the default value, and it cannot be used to operate the linear charger. The functions and state of the two-line communication interface are described as follows:

Data	Name	Function	Description	Default Value
D0	—	—	—	—
D1	—	—	—	—
D2	D_SETCHRG	CHRG pin function setting	This setting is valid only when D3 is set to 1 0: CHRG pin is floating 1: CHRG pin is pulled low	0
D3	D_SELCHRG	CHRG pin function selection	0: CHRG pin outputs the linear charging status CHRG pin is pulled low: Charging CHRG pin is floating: Not charging 1: CHRG pin outputs a status based on the D2 bit setting	0

Data	Name	Function	Description	Default Value
D4	D_SELFN	FN signal function selection	0: FN signal outputs VIN status (INOK1) FN signal is pulled low: VIN input voltage is valid FN signal is floating: VIN input voltage is invalid 1: FN signal outputs VIN status (INOK2) and linear charger status $<t_{INOK2}$: VIN status (INOK2) $>t_{INOK2}+t_{LCS}$: Linear charger status VIN status The FN signal is pulled low for the INOK1 status and is floating for the INOK2 status: VIN input voltage is valid Others: VIN input voltage is invalid Linear charger status (it is only valid when there is a valid VIN input voltage) FN signal is pulled low: The linear charger is enabled and has stopped FN signal is floating: The linear charger is disabled, or the linear charger input power is abnormal, or the linear charger is enabled and charging	0
D5	D_VREN	Reference voltage function enable bit	0: Disable the reference voltage circuit 1: Enable the reference voltage circuit and output by the FN signal	0
D6	D_SELLC	Linear charger function enable bit	0: Disable the linear charger 1: Enable the linear charger, charging is controlled by hardware	1

Power Consumption Considerations

The linear charger requires an ultra-low VBAT quiescent current when fully charged or not charging, it needs to be set up correctly to ensure that the battery is maintained at a fully charged state as much as possible. When the linear charger enters the normal charging mode, if the input voltage does not meet the input voltage range of the linear charger or triggers the charge termination state, the linear charging circuit and related circuits will be automatically shut down. At this time, the VBAT quiescent current is I_{BAT_LK1}. When the linear charger function enable bit, D_SELLC, is cleared to 0, the linear charger will be forced to shut down and the VBAT quiescent current will be maintained at I_{BAT_LK1}, even though the input voltage meets the input voltage range of the linear charger.

In addition, during the shutdown of the linear charger, it can still be set via the communication interface. When the D_VREN is set to 1, the FN signal will output a fixed reference voltage, V_{REF}, at this time, an additional power consumption will be generated on the device. In addition to the device operating state, the power consumption of the pull-low resistor of the SDA/SCL signal should also be considered into the VBAT quiescent current.

Application Information

When the FN signal outputs the V_{REF} voltage, do not pull the FN signal low to avoid causing the V_{REF} reference voltage to be invalid. The following table can be referenced in each status to ensure that the FN signal maintains a normal V_{REF} output.

It is recommended to apply the control according to this table after the main firmware has completed the FN function reading and the use of the V_{REF} reference voltage.

Status		Two-Line Control	
VIN	Linear Charger	D_SELLC	D_SELFN
Not connected	Disable	0	1
Invalid	Disable	0	1
Valid	Disable	0	1
	Charging	1(Note)	1
	Fully charged	0	1

Note: During the use of the V_{REF} reference voltage, when the linear charger status changes from charging to fully charged, it will cause the V_{REF} reference voltage to be invalid. To avoid this situation, it is therefore necessary to confirm the linear charger status via the FN signal before and after using the V_{REF} reference voltage. If the statuses are different, it means that the V_{REF} reference voltage was invalidated during its use, so re-execute the above operations or ignore the current V_{REF} output.

Component Selection

VIN Power Supply and Bypass Capacitors

The VIN power supply capacitor, C_{VIN2}, is suggested to have a value of 4.7μF. The power supply bypass capacitor, C_{VIN1}, can be used to filter out high-frequency noises on VIN when the circuit board is powered by the mains and the suggested capacitance value is 0.1μF.

VBAT Output Capacitor

The VBAT output capacitor, C_{VBAT}, is suggested to have a value of 10μF.

Linear Charger Current Regulation Resistor

The linear charger can select the output current according to the needs. It is recommended to use the grounding resistor R_{SET} with the recommended resistance value in the table below.

I_{BAT_CC} (A)	Resistor Package	R_{SET} (kΩ)
1	0603	2
0.5		4
0.1		20

Layout Guideline

To achieve better efficiency and reduce conduction noise, important PCB layout considerations are as follows:

1. Keep the main current path traces as short and wide as possible to reduce parasitic inductance and resistance.
2. Place the input/output capacitors as close as possible to the device pins.
3. Ensure that all feedback connections are short and straight. Components should be placed as close to the pins as possible.

Thermal Consideration

The maximum power dissipation depends upon the thermal resistance of the device package, PCB layout, rate of surrounding airflow and difference between the junction and ambient temperature. The maximum power dissipation can be calculated by the following formula:

$$P_{D(MAX)}=(T_{J(MAX)} - Ta)/\theta_{JA} \qquad (W)$$

Where $T_{J(MAX)}$ is the maximum junction temperature, Ta is the ambient temperature and θ_{JA} is the junction-to-ambient thermal resistance of device package.

For maximum operating rating conditions, the maximum junction temperature is 160°C. However, it is recommended that the maximum junction temperature does not exceed 125°C during normal operation to maintain high reliability. The de-rating curve of the maximum power dissipation is shown below:

$$P_{D(MAX)}=(160°C - 25°C)/(100°C/W)=1.35W$$

For a fixed $T_{J(MAX)}$ of 160°C, the maximum power dissipation depends upon the operating ambient temperature and the package's thermal resistance, θ_{JA}. The de-rating curve below shows the effect of rising ambient temperature on the maximum recommended power dissipation.

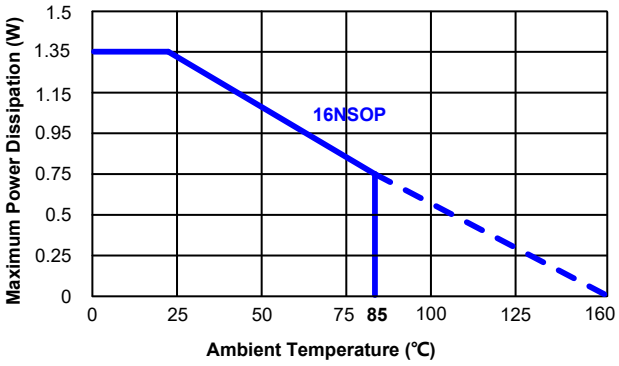

Interrupts

Interrupts are an important part of any microcontroller system. When an external event or an internal function such as a Timer Module or an A/D converter requires microcontroller attention, their corresponding interrupt will enforce a temporary suspension of the main program allowing the microcontroller to direct attention to their respective needs. The device contains several external interrupt and internal interrupt functions. The external interrupts are generated by the action of the external INT1 pin, while the internal interrupts are generated by various internal functions such as the TMs, Time Bases and the A/D converter, etc.

The various interrupt enable bits, together with their associated request flags, are shown in the accompanying diagrams with their order of priority. Some interrupt sources have their own individual vector while others share the same multi-function interrupt vector.

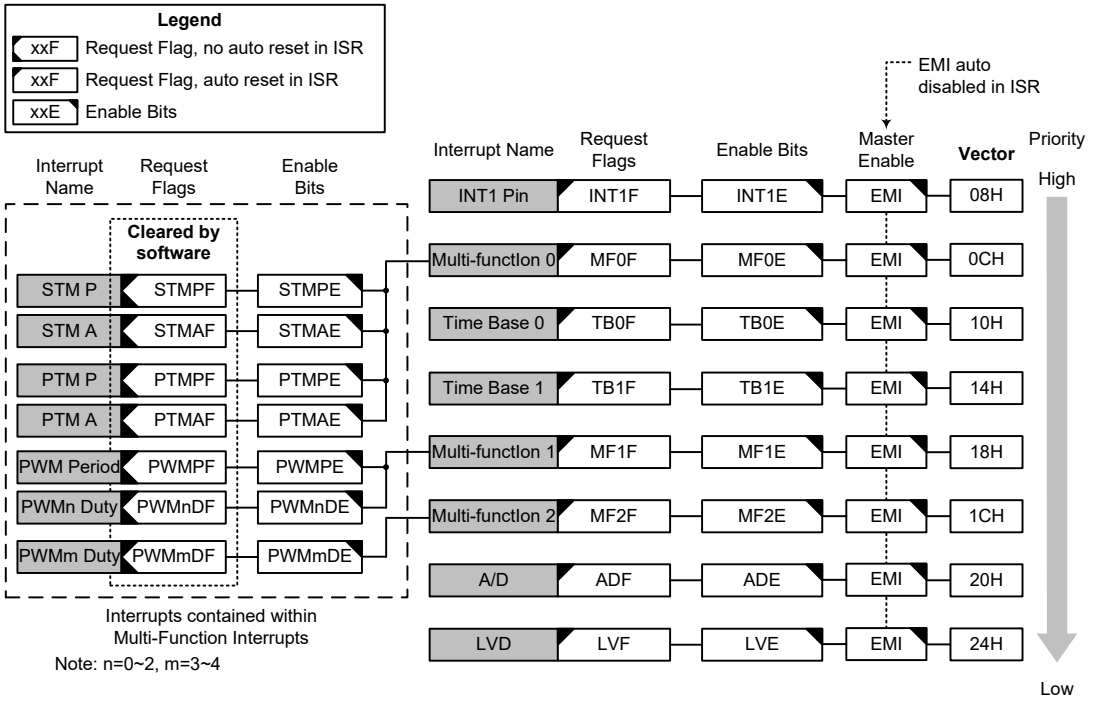

Interrupt Structure

Interrupt Registers

Overall interrupt control, which basically means the setting of request flags when certain microcontroller conditions occur and the setting of interrupt enable bits by the application program, is controlled by a series of registers, located in the Special Purpose Data Memory, as shown in the accompanying table. The registers fall into three categories. The first is the INTC0~INTC2 registers which setup the primary interrupts, the second is the MFI0~MFI2 registers which setup the Multi-function interrupts. Finally there is an INTEG register to setup the external interrupt trigger edge type.

Each register contains a number of enable bits to enable or disable individual registers as well as interrupt flags to indicate the presence of an interrupt request. The naming convention of these follows a specific pattern. First is listed an abbreviated interrupt type, then the (optional) number of that interrupt followed by either an "E" for enable/disable bit or "F" for request flag.

Function	Enable Bit	Request Flag	Notes
Global	EMI	—	—
INT1 Pin	INT1E	INT1F	—
Time Base	TBnE	TBnF	n=0~1
PWM	PWMPE	PWMPF	—
	PWMnDE	PWMnDF	n=0~4
A/D Converter	ADE	ADF	—
LVD	LVE	LVF	—
Multi-function	MFnE	MFnF	n=0~2
STM	STMPE	STMPF	—
	STMAE	STMAF	—
PTM	PTMPE	PTMPF	—
	PTMAE	PTMAF	—

Interrupt Register Bit Naming Conventions

Register Name	Bit							
	7	6	5	4	3	2	1	0
INTEG	—	—	—	—	INT1S1	INT1S0	D1	D0
INTC0	—	MF0F	INT1F	D4	MF0E	INT1E	D1	EMI
INTC1	MF2F	MF1F	TB1F	TB0F	MF2E	MF1E	TB1E	TB0E
INTC2	—	—	LVF	ADF	—	—	LVE	ADE
MFI0	PTMAF	PTMPF	STMAF	STMPF	PTMAE	PTMPE	STMAE	STMPE
MFI1	PWM2DF	PWM1DF	PWM0DF	PWMPF	PWM2DE	PWM1DE	PWM0DE	PWMPE
MFI2	—	—	PWM4DF	PWM3DF	—	—	PWM4DE	PWM3DE

Interrupt Register List

• INTEG Register

Bit	7	6	5	4	3	2	1	0
Name	—	—	—	—	INT1S1	INT1S0	D1	D0
R/W	—	—	—	—	R/W	R/W	R/W	R/W
POR	—	—	—	—	0	0	0	0

Bit 7~4 Unimplemented, read as "0"

Bit 3~2 **INT1S1~INT1S0**: Interrupt edge control for INT1 pin
00: Disable
01: Rising edge
10: Falling edge
11: Rising and falling edges

Bit 1~0 **D1~D0**: Reserved bits, should remain unchanged after power-on reset

• **INTC0 Register**

Bit	7	6	5	4	3	2	1	0
Name	—	MF0F	INT1F	D4	MF0E	INT1E	D1	EMI
R/W	—	R/W	R/W	R/W	R/W	R/W	R/W	R/W
POR	—	0	0	0	0	0	0	0

Bit 7 Unimplemented, read as "0"

Bit 6 **MF0F**: Multi-function interrupt 0 request flag
0: No request
1: Interrupt request

Bit 5 **INT1F**: INT1 interrupt request flag
0: No request
1: Interrupt request

Bit 4 **D4**: Reserved bit, should remain unchanged after power-on reset

Bit 3 **MF0E**: Multi-function interrupt 0 control
0: Disable
1: Enable

Bit 2 **INT1E**: INT1 interrupt control
0: Disable
1: Enable

Bit 1 **D1**: Reserved bit, should remain unchanged after power-on reset

Bit 0 **EMI**: Global interrupt control
0: Disable
1: Enable

• **INTC1 Register**

Bit	7	6	5	4	3	2	1	0
Name	MF2F	MF1F	TB1F	TB0F	MF2E	MF1E	TB1E	TB0E
R/W	R/W	R/W	R/W	R/W	R/W	R/W	R/W	R/W
POR	0	0	0	0	0	0	0	0

Bit 7 **MF2F**: Multi-function interrupt 2 request flag
0: No request
1: Interrupt request

Bit 6 **MF1F**: Multi-function interrupt 1 request flag
0: No request
1: Interrupt request

Bit 5 **TB1F**: Time Base 1 interrupt request flag
0: No request
1: Interrupt request

Bit 4 **TB0F**: Time Base 0 interrupt request flag
0: No request
1: Interrupt request

Bit 3 **MF2E**: Multi-function interrupt 2 control
0: Disable
1: Enable

Bit 2 **MF1E**: Multi-function interrupt 1 control
0: Disable
1: Enable

Bit 1 **TB1E**: Time Base 1 interrupt control
0: Disable
1: Enable

Bit 0 **TB0E**: Time Base 0 interrupt control
0: Disable
1: Enable

• **INTC2 Register**

Bit	7	6	5	4	3	2	1	0
Name	—	—	LVF	ADF	—	—	LVE	ADE
R/W	—	—	R/W	R/W	—	—	R/W	R/W
POR	—	—	0	0	—	—	0	0

Bit 7~6 Unimplemented, read as "0"

Bit 5 **LVF**: LVD interrupt request flag
0: No request
1: Interrupt request

Bit 4 **ADF**: A/D Converter interrupt request flag
0: No request
1: Interrupt request

Bit 3~2 Unimplemented, read as "0"

Bit 1 **LVE**: LVD interrupt control
0: Disable
1: Enable

Bit 0 **ADE**: A/D Converter interrupt control
0: Disable
1: Enable

• **MFI0 Register**

Bit	7	6	5	4	3	2	1	0
Name	PTMAF	PTMPF	STMAF	STMPF	PTMAE	PTMPE	STMAE	STMPE
R/W	R/W	R/W	R/W	R/W	R/W	R/W	R/W	R/W
POR	0	0	0	0	0	0	0	0

Bit 7 **PTMAF**: PTM Comparator A match interrupt request flag
0: No request
1: Interrupt request
Note that this bit must be cleared to zero by the application program when the interrupt is serviced.

Bit 6 **PTMPF**: PTM Comparator P match interrupt request flag
0: No request
1: Interrupt request
Note that this bit must be cleared to zero by the application program when the interrupt is serviced.

Bit 5 **STMAF**: STM Comparator A match interrupt request flag
0: No request
1: Interrupt request
Note that this bit must be cleared to zero by the application program when the interrupt is serviced.

Bit 4 **STMPF**: STM Comparator P match interrupt request flag
0: No request
1: Interrupt request
Note that this bit must be cleared to zero by the application program when the interrupt is serviced.

Bit 3 **PTMAE**: PTM Comparator A match interrupt control
0: Disable
1: Enable

Bit 2 **PTMPE**: PTM Comparator P match interrupt control
0: Disable
1: Enable

Bit 1 **STMAE**: STM Comparator A match interrupt control
0: Disable
1: Enable

Bit 0 **STMPE**: STM Comparator P match interrupt control
0: Disable
1: Enable

- **MFI1 Register**

Bit	7	6	5	4	3	2	1	0
Name	PWM2DF	PWM1DF	PWM0DF	PWMPF	PWM2DE	PWM1DE	PWM0DE	PWMPE
R/W	R/W	R/W	R/W	R/W	R/W	R/W	R/W	R/W
POR	0	0	0	0	0	0	0	0

Bit 7 **PWM2DF**: PWM duty 2 interrupt request flag
0: No request
1: Interrupt request
Note that this bit must be cleared to zero by the application program when the interrupt is serviced.

Bit 6 **PWM1DF**: PWM duty 1 interrupt request flag
0: No request
1: Interrupt request
Note that this bit must be cleared to zero by the application program when the interrupt is serviced.

Bit 5 **PWM0DF**: PWM duty 0 interrupt request flag
0: No request
1: Interrupt request
Note that this bit must be cleared to zero by the application program when the interrupt is serviced.

Bit 4 **PWMPF**: PWM period interrupt request flag
0: No request
1: Interrupt request
Note that this bit must be cleared to zero by the application program when the interrupt is serviced.

Bit 3 **PWM2DE**: PWM duty 2 interrupt control
0: Disable
1: Enable

Bit 2 **PWM1DE**: PWM duty 1 interrupt control
0: Disable
1: Enable

Bit 1 **PWM0DE**: PWM duty 0 interrupt control
0: Disable
1: Enable

Bit 0 **PWMPE**: PWM period interrupt control
0: Disable
1: Enable

• **MFI2 Register**

Bit	7	6	5	4	3	2	1	0
Name	—	—	PWM4DF	PWM3DF	—	—	PWM4DE	PWM3DE
R/W	—	—	R/W	R/W	—	—	R/W	R/W
POR	—	—	0	0	—	—	0	0

Bit 7~6 Unimplemented, read as "0"

Bit 5 **PWM4DF**: PWM duty 4 interrupt request flag
0: No request
1: Interrupt request
Note that this bit must be cleared to zero by the application program when the interrupt is serviced.

Bit 4 **PWM3DF**: PWM duty 3 interrupt request flag
0: No request
1: Interrupt request
Note that this bit must be cleared to zero by the application program when the interrupt is serviced.

Bit 3~2 Unimplemented, read as "0"

Bit 1 **PWM4DE**: PWM duty 4 interrupt control
0: Disable
1: Enable

Bit 0 **PWM3DE**: PWM duty 3 interrupt control
0: Disable
1: Enable

Interrupt Operation

When the conditions for an interrupt event occur, such as a TM Comparator P or Comparator A match or A/D conversion completion etc., the relevant interrupt request flag will be set. Whether the request flag actually generates a program jump to the relevant interrupt vector is determined by the condition of the interrupt enable bit. If the enable bit is set high then the program will jump to its relevant vector; if the enable bit is zero then although the interrupt request flag is set an actual interrupt will not be generated and the program will not jump to the relevant interrupt vector. The global interrupt enable bit, if cleared to zero, will disable all interrupts.

When an interrupt is generated, the Program Counter, which stores the address of the next instruction to be executed, will be transferred onto the stack. The Program Counter will then be loaded with a new address which will be the value of the corresponding interrupt vector. The microcontroller will then fetch its next instruction from this interrupt vector. The instruction at this vector will usually be a "JMP" which will jump to another section of program which is known as the interrupt service routine. Here is located the code to control the appropriate interrupt. The interrupt service routine must be terminated with a "RETI", which retrieves the original Program Counter address from the stack and allows the microcontroller to continue with normal execution at the point where the interrupt occurred.

Once an interrupt subroutine is serviced, all the other interrupts will be blocked, as the global interrupt enable bit, EMI bit will be cleared automatically. This will prevent any further interrupt nesting from occurring. However, if other interrupt requests occur during this interval, although the interrupt will not be immediately serviced, the request flag will still be recorded.

If an interrupt requires immediate servicing while the program is already in another interrupt service routine, the EMI bit should be set after entering the routine, to allow interrupt nesting. If the stack is full, the interrupt request will not be acknowledged, even if the related interrupt is enabled, until the Stack Pointer is decremented. If immediate service is desired, the stack must be prevented from

becoming full. In case of simultaneous requests, the Interrupt Structure diagram shows the priority that is applied. All of the interrupt request flags when set will wake-up the device if it is in SLEEP or IDLE Mode, however to prevent a wake-up from occurring the corresponding flag should be set before the device is in SLEEP or IDLE Mode.

External Interrupt

The external interrupt is controlled by signal transitions on the pin INT1. An external interrupt request will take place when the external interrupt request flag, INT1F, is set, which will occur when a transition, whose type is chosen by the edge select bits, appears on the external interrupt pin. To allow the program to branch to the interrupt vector address, the global interrupt enable bit, EMI, and the external interrupt enable bit, INT1E, must first be set. Additionally the correct interrupt edge type must be selected using the INTEG register to enable the external interrupt function and to choose the trigger edge type. As the external interrupt pin is pin-shared with an I/O pin, it can only be configured as an external interrupt pin by setting the pin-shared register. The pin must also be setup as an input by setting the corresponding bit in the port control register. When the interrupt is enabled, the stack is not full and the correct transition type appears on the external interrupt pin, a subroutine call to the external interrupt vector, will take place. When the interrupt is serviced, the external interrupt request flag, INT1F, will be automatically reset and the EMI bit will be automatically cleared to disable other interrupts. Note that the pull-high resistor selection on the external interrupt pin will remain valid even if the pin is used as an external interrupt input.

The INTEG register is used to select the type of active edge that will trigger the external interrupt. A choice of either rising or falling or both edge types can be chosen to trigger an external interrupt. Note that the INTEG register can also be used to disable the external interrupt function.

Multi-function Interrupts

Within the device there are three Multi-function interrupts. Unlike the other independent interrupts, these interrupts have no independent source, but rather are formed from other existing interrupt sources, namely the TM interrupts, PWM period interrupt and PWM duty interrupts.

A Multi-function interrupt request will take place when any of the Multi-function interrupt request flags MFnF are set. The Multi-function interrupt flag will be set when any of their included functions generate an interrupt request flag. When the Multi-function interrupt is enabled and the stack is not full, and any one of the interrupts contained within each of the Multi-function interrupt occurs, a subroutine call to the related Multi-function interrupt vector will take place. When the interrupt is serviced, the related Multi-function request flag will be automatically reset and the EMI bit will be automatically cleared to disable other interrupts.

However, it must be noted that, although the Multi-function Interrupt request flags will be automatically reset when the interrupt is serviced, the request flags from the original source of the Multi-function interrupt will not be automatically reset and must be manually reset by the application program.

TM Interrupts

The Standard and Periodic TMs each have two interrupts, one comes from the comparator A match situation and the other comes from the comparator P match situation. All of the TM interrupts are contained within the Multi-function Interrupts. For all of the TM types there are two interrupt request flags and two enable control bits. A TM interrupt request will take place when any of the TM request flags are set, a situation which occurs when a TM comparator P or A match situation happens.

To allow the program to branch to their respective interrupt vector addresses, the global interrupt enable bit, EMI, respective TM Interrupt enable bit, and relevant Multi-function Interrupt enable bit, MFnE, must first be set. When the interrupt is enabled, the stack is not full and a TM comparator match situation occurs, a subroutine call to the relevant Multi-function Interrupt vector location, will take place. When the TM interrupt is serviced, the EMI bit will be automatically cleared to disable other interrupts. However, only the related MFnF flag will be automatically cleared. As the TM interrupt request flags will not be automatically cleared, they have to be cleared by the application program.

Time Base Interrupts

The function of the Time Base Interrupt is to provide regular time signal in the form of an internal interrupt. They are controlled by the overflow signals from their respective timer functions. When these happen their respective interrupt request flags, TB0F or TB1F, will be set. To allow the program to branch to their respective interrupt vector addresses, the global interrupt enable bit, EMI and Time Base enable bit, TB0E or TB1E, must first be set. When the interrupt is enabled, the stack is not full and the Time Base overflows, a subroutine call to their respective vector locations will take place. When the interrupt is serviced, the respective interrupt request flag, TB0F or TB1F, will be automatically reset and the EMI bit will be cleared to disable other interrupts. The purpose of the Time Base Interrupt is to provide an interrupt signal at fixed time periods. Their clock sources f_{PSC0} or f_{PSC1}, originate from the internal clock source f_{SYS}, $f_{SYS}/4$ or f_{SUB} and then passes through a divider, the division ratio of which is selected by programming the appropriate bits in the TB0C or TB1C register to obtain longer interrupt periods whose value ranges. The clock source which in turn controls the Time Base interrupt period is selected using the CLKSEL0[1:0] and CLKSEL1[1:0] bits in the PSC0R and PSC1R register respectively.

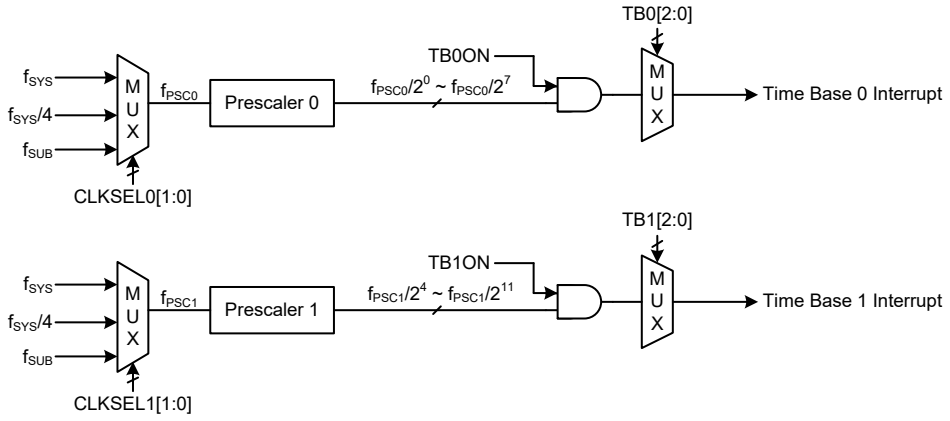

Time Base Interrupts

• **PSC0R Register**

Bit	7	6	5	4	3	2	1	0
Name	—	—	—	—	—	—	CLKSEL01	CLKSEL00
R/W	—	—	—	—	—	—	R/W	R/W
POR	—	—	—	—	—	—	0	0

Bit 7~2 Unimplemented, read as "0"

Bit 1~0 **CLKSEL01~CLKSEL00**: Prescaler 0 clock source selection
00: f_{SYS}
01: $f_{SYS}/4$
1x: f_{SUB}

• **PSC1R Register**

Bit	7	6	5	4	3	2	1	0
Name	—	—	—	—	—	—	CLKSEL11	CLKSEL10
R/W	—	—	—	—	—	—	R/W	R/W
POR	—	—	—	—	—	—	0	0

Bit 7~2 Unimplemented, read as "0"

Bit 1~0 **CLKSEL11~CLKSEL10**: Prescaler 1 clock source selection
00: f_{SYS}
01: $f_{SYS}/4$
1x: f_{SUB}

• **TB0C Register**

Bit	7	6	5	4	3	2	1	0
Name	TB0ON	—	—	—	—	TB02	TB01	TB00
R/W	R/W	—	—	—	—	R/W	R/W	R/W
POR	0	—	—	—	—	0	0	0

Bit 7 **TB0ON**: Time Base 0 enable control
0: Disable
1: Enable

Bit 6~3 Unimplemented, read as "0"

Bit 2~0 **TB02~TB00**: Time Base 0 Time-out Period selection
000: $2^0/f_{PSC0}$
001: $2^1/f_{PSC0}$
010: $2^2/f_{PSC0}$
011: $2^3/f_{PSC0}$
100: $2^4/f_{PSC0}$
101: $2^5/f_{PSC0}$
110: $2^6/f_{PSC0}$
111: $2^7/f_{PSC0}$

• **TB1C Register**

Bit	7	6	5	4	3	2	1	0
Name	TB1ON	—	—	—	—	TB12	TB11	TB10
R/W	R/W	—	—	—	—	R/W	R/W	R/W
POR	0	—	—	—	—	0	0	0

Bit 7 **TB1ON**: Time Base 1 enable control
0: Disable
1: Enable

Bit 6~3 Unimplemented, read as "0"

Bit 2~0 **TB12~TB10**: Time Base 1 Time-out Period selection
000: $2^4/f_{PSC1}$
001: $2^5/f_{PSC1}$
010: $2^6/f_{PSC1}$
011: $2^7/f_{PSC1}$
100: $2^8/f_{PSC1}$
101: $2^9/f_{PSC1}$
110: $2^{10}/f_{PSC1}$
111: $2^{11}/f_{PSC1}$

PWM Interrupts

The PWM circuit has six interrupts, a PWM period interrupt and PWM0~PWM4 duty interrupts. All of them are contained within the Multi-function Interrupts. A PWM interrupt request will take place when any of the PWM interrupt request flags, PWMPF or PWM0DF~PWM4DF, are set, which occurs when the PWM period or PWM0~PWM4 duty matches.

To allow the program to branch to their respectively interrupt vector addresses, the global interrupt enable bit, EMI, and the corresponding PWM interrupt enable bit, PWMPE or PWM0DE~PWM4DE, and relevant Multi-function Interrupt enable bit, MFnE, must first be set. When the interrupt is enabled, the stack is not full and the PWM period or PWM0~PWM4 duty matches, a subroutine call to the respective PWM interrupt vector will take place. When the PWM interrupt is serviced, the EMI bit will be automatically cleared to disable other interrupts, however only the related MFnF flags will be automatically cleared. As the PWM interrupt request flags will not be automatically cleared, they have to be cleared by the application program.

A/D Converter Interrupt

An A/D Converter Interrupt request will take place when the A/D Converter Interrupt request flag, ADF, is set, which occurs when the A/D conversion process finishes. To allow the program to branch to its respective interrupt vector address, the global interrupt enable bit, EMI, and A/D Interrupt enable bit, ADE, must first be set. When the interrupt is enabled, the stack is not full and the A/D conversion process has ended, a subroutine call to the A/D Interrupt vector, will take place. When the A/D Converter Interrupt is serviced, the A/D Interrupt flag, ADF, will be automatically cleared. The EMI bit will also be automatically cleared to disable other interrupts.

LVD Interrupt

An LVD Interrupt request will take place when the LVD Interrupt request flag, LVF, is set, which occurs when the Low Voltage Detector function detects a low power supply voltage. To allow the program to branch to its interrupt vector address, the global interrupt enable bit, EMI, Low Voltage Interrupt enable bit, LVE, must first be set. When the interrupt is enabled, the stack is not full and a low voltage condition occurs, a subroutine call to the LVD Interrupt vector, will take place. When the Interrupt is serviced, the LVD Interrupt flag, LVF, will be automatically cleared. The EMI bit will also be automatically cleared to disable other interrupts.

Interrupt Wake-up Function

Each of the interrupt functions has the capability of waking up the microcontroller when in the SLEEP or IDLE Mode. A wake-up is generated when an interrupt request flag changes from low to high and is independent of whether the interrupt is enabled or not. Therefore, even though the device is in the SLEEP or IDLE Mode and its system oscillator stopped, situations such as external edge transitions on the external interrupt pins or a low power supply voltage may cause their respective interrupt flag to be set high and consequently generate an interrupt. Care must therefore be taken if spurious wake-up situations are to be avoided. If an interrupt wake-up function is to be disabled then

the corresponding interrupt request flag should be set high before the device enters the SLEEP or IDLE Mode. The interrupt enable bits have no effect on the interrupt wake-up function..

Programming Considerations

By disabling the relevant interrupt enable bits, a requested interrupt can be prevented from being serviced, however, once an interrupt request flag is set, it will remain in this condition in the interrupt register until the corresponding interrupt is serviced or until the request flag is cleared by the application program.

It is recommended that programs do not use the "CALL" instruction within the interrupt service subroutine. Interrupts often occur in an unpredictable manner or need to be serviced immediately. If only one stack is left and the interrupt is not well controlled, the original control sequence will be damaged once a CALL subroutine is executed in the interrupt subroutine.

Every interrupt has the capability of waking up the microcontroller when it is in the SLEEP or IDLE Mode, the wake up being generated when the interrupt request flag changes from low to high. If it is required to prevent a certain interrupt from waking up the microcontroller then its respective request flag should be first set high before enter SLEEP or IDLE Mode.

As only the Program Counter is pushed onto the stack, then when the interrupt is serviced, if the contents of the accumulator, status register or other registers are altered by the interrupt service program, their contents should be saved to the memory at the beginning of the interrupt service routine.

To return from an interrupt subroutine, either a RET or RETI instruction may be executed. The RETI instruction in addition to executing a return to the main program also automatically sets the EMI bit high to allow further interrupts. The RET instruction however only executes a return to the main program leaving the EMI bit in its present zero state and therefore disabling the execution of further interrupts.

Configuration Options

Configuration options refer to certain options within the MCU that are programmed into the device during the programming process. During the development process, these options are selected using the HT-IDE software development tools. All options must be defined for proper system function, the details of which are shown in the table.

No.	Options
I/O Pin-Shared Options	
1	$\overline{\text{RES}}$ pin reset function selection: 00: Always I/O or other function 01: $\overline{\text{RES}}$ pin 10~11: By RSTC register control
Oscillator Option	
2	HIRC Frequency Selection – f_{HIRC}: 8MHz, 12MHz or 16MHz

Application Circuits

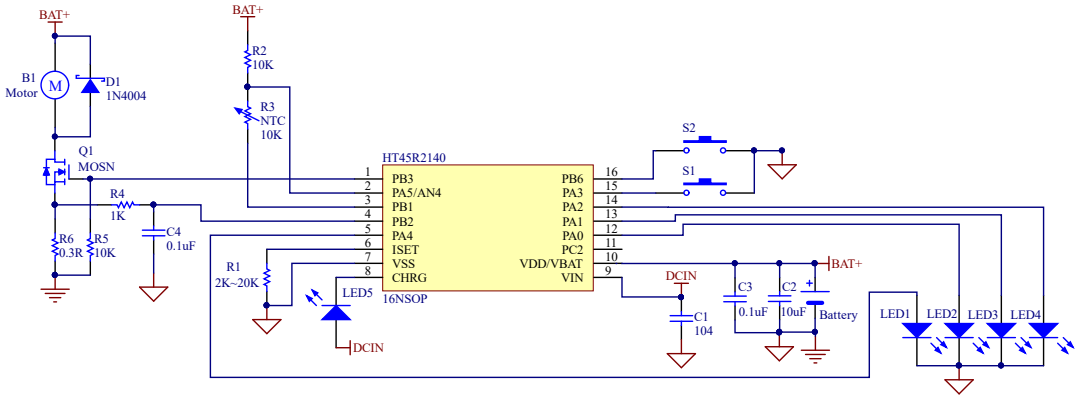

Instruction Set

Introduction

Central to the successful operation of any microcontroller is its instruction set, which is a set of program instruction codes that directs the microcontroller to perform certain operations. In the case of Holtek microcontroller, a comprehensive and flexible set of over 60 instructions is provided to enable programmers to implement their application with the minimum of programming overheads.

For easier understanding of the various instruction codes, they have been subdivided into several functional groupings.

Instruction Timing

Most instructions are implemented within one instruction cycle. The exceptions to this are branch, call, or table read instructions where two instruction cycles are required. One instruction cycle is equal to 4 system clock cycles, therefore in the case of an 8MHz system oscillator, most instructions would be implemented within 0.5μs and branch or call instructions would be implemented within 1μs. Although instructions which require one more cycle to implement are generally limited to the JMP, CALL, RET, RETI and table read instructions, it is important to realize that any other instructions which involve manipulation of the Program Counter Low register or PCL will also take one more cycle to implement. As instructions which change the contents of the PCL will imply a direct jump to that new address, one more cycle will be required. Examples of such instructions would be “CLR PCL” or “MOV PCL, A”. For the case of skip instructions, it must be noted that if the result of the comparison involves a skip operation then this will also take one more cycle, if no skip is involved then only one cycle is required.

Moving and Transferring Data

The transfer of data within the microcontroller program is one of the most frequently used operations. Making use of several kinds of MOV instructions, data can be transferred from registers to the Accumulator and vice-versa as well as being able to move specific immediate data directly into the Accumulator. One of the most important data transfer applications is to receive data from the input ports and transfer data to the output ports.

Arithmetic Operations

The ability to perform certain arithmetic operations and data manipulation is a necessary feature of most microcontroller applications. Within the Holtek microcontroller instruction set are a range of add and subtract instruction mnemonics to enable the necessary arithmetic to be carried out. Care must be taken to ensure correct handling of carry and borrow data when results exceed 255 for addition and less than 0 for subtraction. The increment and decrement instructions such as INC, INCA, DEC and DECA provide a simple means of increasing or decreasing by a value of one of the values in the destination specified.

Logical and Rotate Operation

The standard logical operations such as AND, OR, XOR and CPL all have their own instruction within the Holtek microcontroller instruction set. As with the case of most instructions involving data manipulation, data must pass through the Accumulator which may involve additional programming steps. In all logical data operations, the zero flag may be set if the result of the operation is zero. Another form of logical data manipulation comes from the rotate instructions such as RR, RL, RRC and RLC which provide a simple means of rotating one bit right or left. Different rotate instructions exist depending on program requirements. Rotate instructions are useful for serial port programming applications where data can be rotated from an internal register into the Carry bit from where it can be examined and the necessary serial bit set high or low. Another application which rotate data operations are used is to implement multiplication and division calculations.

Branches and Control Transfer

Program branching takes the form of either jumps to specified locations using the JMP instruction or to a subroutine using the CALL instruction. They differ in the sense that in the case of a subroutine call, the program must return to the instruction immediately when the subroutine has been carried out. This is done by placing a return instruction "RET" in the subroutine which will cause the program to jump back to the address right after the CALL instruction. In the case of a JMP instruction, the program simply jumps to the desired location. There is no requirement to jump back to the original jumping off point as in the case of the CALL instruction. One special and extremely useful set of branch instructions are the conditional branches. Here a decision is first made regarding the condition of a certain data memory or individual bits. Depending upon the conditions, the program will continue with the next instruction or skip over it and jump to the following instruction. These instructions are the key to decision making and branching within the program perhaps determined by the condition of certain input switches or by the condition of internal data bits.

Bit Operations

The ability to provide single bit operations on Data Memory is an extremely flexible feature of all Holtek microcontrollers. This feature is especially useful for output port bit programming where individual bits or port pins can be directly set high or low using either the "SET [m].i" or "CLR [m].i" instructions respectively. The feature removes the need for programmers to first read the 8-bit output port, manipulate the input data to ensure that other bits are not changed and then output the port with the correct new data. This read-modify-write process is taken care of automatically when these bit operation instructions are used.

Table Read Operations

Data storage is normally implemented by using registers. However, when working with large amounts of fixed data, the volume involved often makes it inconvenient to store the fixed data in the Data Memory. To overcome this problem, Holtek microcontrollers allow an area of Program Memory to be setup as a table where data can be directly stored. A set of easy to use instructions provides the means by which this fixed data can be referenced and retrieved from the Program Memory.

Other Operations

In addition to the above functional instructions, a range of other instructions also exist such as the "HALT" instruction for Power-down operations and instructions to control the operation of the Watchdog Timer for reliable program operations under extreme electric or electromagnetic environments. For their relevant operations, refer to the functional related sections.

Instruction Set Summary

The instructions related to the data memory access in the following table can be used when the desired data memory is located in Data Memory sector 0.

Table Conventions

x: Bits immediate data
m: Data Memory address
A: Accumulator
i: 0~7 number of bits
addr: Program memory address

Mnemonic	Description	Cycles	Flag Affected
Arithmetic			
ADD A,[m]	Add Data Memory to ACC	1	Z, C, AC, OV, SC
ADDM A,[m]	Add ACC to Data Memory	1[Note]	Z, C, AC, OV, SC
ADD A,x	Add immediate data to ACC	1	Z, C, AC, OV, SC
ADC A,[m]	Add Data Memory to ACC with Carry	1	Z, C, AC, OV, SC
ADCM A,[m]	Add ACC to Data memory with Carry	1[Note]	Z, C, AC, OV, SC
SUB A,x	Subtract immediate data from the ACC	1	Z, C, AC, OV, SC, CZ
SUB A,[m]	Subtract Data Memory from ACC	1	Z, C, AC, OV, SC, CZ
SUBM A,[m]	Subtract Data Memory from ACC with result in Data Memory	1[Note]	Z, C, AC, OV, SC, CZ
SBC A,x	Subtract immediate data from ACC with Carry	1	Z, C, AC, OV, SC, CZ
SBC A,[m]	Subtract Data Memory from ACC with Carry	1	Z, C, AC, OV, SC, CZ
SBCM A,[m]	Subtract Data Memory from ACC with Carry, result in Data Memory	1[Note]	Z, C, AC, OV, SC, CZ
DAA [m]	Decimal adjust ACC for Addition with result in Data Memory	1[Note]	C
Logic Operation			
AND A,[m]	Logical AND Data Memory to ACC	1	Z
OR A,[m]	Logical OR Data Memory to ACC	1	Z
XOR A,[m]	Logical XOR Data Memory to ACC	1	Z
ANDM A,[m]	Logical AND ACC to Data Memory	1[Note]	Z
ORM A,[m]	Logical OR ACC to Data Memory	1[Note]	Z
XORM A,[m]	Logical XOR ACC to Data Memory	1[Note]	Z
AND A,x	Logical AND immediate Data to ACC	1	Z
OR A,x	Logical OR immediate Data to ACC	1	Z
XOR A,x	Logical XOR immediate Data to ACC	1	Z
CPL [m]	Complement Data Memory	1[Note]	Z
CPLA [m]	Complement Data Memory with result in ACC	1	Z
Increment & Decrement			
INCA [m]	Increment Data Memory with result in ACC	1	Z
INC [m]	Increment Data Memory	1[Note]	Z
DECA [m]	Decrement Data Memory with result in ACC	1	Z
DEC [m]	Decrement Data Memory	1[Note]	Z
Rotate			
RRA [m]	Rotate Data Memory right with result in ACC	1	None
RR [m]	Rotate Data Memory right	1[Note]	None
RRCA [m]	Rotate Data Memory right through Carry with result in ACC	1	C
RRC [m]	Rotate Data Memory right through Carry	1[Note]	C
RLA [m]	Rotate Data Memory left with result in ACC	1	None
RL [m]	Rotate Data Memory left	1[Note]	None
RLCA [m]	Rotate Data Memory left through Carry with result in ACC	1	C
RLC [m]	Rotate Data Memory left through Carry	1[Note]	C

Mnemonic	Description	Cycles	Flag Affected
Data Move			
MOV A,[m]	Move Data Memory to ACC	1	None
MOV [m],A	Move ACC to Data Memory	1[Note]	None
MOV A,x	Move immediate data to ACC	1	None
Bit Operation			
CLR [m].i	Clear bit of Data Memory	1[Note]	None
SET [m].i	Set bit of Data Memory	1[Note]	None
Branch Operation			
JMP addr	Jump unconditionally	2	None
SZ [m]	Skip if Data Memory is zero	1[Note]	None
SZA [m]	Skip if Data Memory is zero with data movement to ACC	1[Note]	None
SZ [m].i	Skip if bit i of Data Memory is zero	1[Note]	None
SNZ [m]	Skip if Data Memory is not zero	1[Note]	None
SNZ [m].i	Skip if bit i of Data Memory is not zero	1[Note]	None
SIZ [m]	Skip if increment Data Memory is zero	1[Note]	None
SDZ [m]	Skip if decrement Data Memory is zero	1[Note]	None
SIZA [m]	Skip if increment Data Memory is zero with result in ACC	1[Note]	None
SDZA [m]	Skip if decrement Data Memory is zero with result in ACC	1[Note]	None
CALL addr	Subroutine call	2	None
RET	Return from subroutine	2	None
RET A,x	Return from subroutine and load immediate data to ACC	2	None
RETI	Return from interrupt	2	None
Table Read Operation			
TABRD [m]	Read table (specific page) to TBLH and Data Memory	2[Note]	None
TABRDL [m]	Read table (last page) to TBLH and Data Memory	2[Note]	None
ITABRD [m]	Increment table pointer TBLP first and Read table (specific page) to TBLH and Data Memory	2[Note]	None
ITABRDL [m]	Increment table pointer TBLP first and Read table (last page) to TBLH and Data Memory	2[Note]	None
Miscellaneous			
NOP	No operation	1	None
CLR [m]	Clear Data Memory	1[Note]	None
SET [m]	Set Data Memory	1[Note]	None
CLR WDT	Clear Watchdog Timer	1	TO, PDF
SWAP [m]	Swap nibbles of Data Memory	1[Note]	None
SWAPA [m]	Swap nibbles of Data Memory with result in ACC	1	None
HALT	Enter power down mode	1	TO, PDF

Note: 1. For skip instructions, if the result of the comparison involves a skip then two cycles are required, if no skip takes place only one cycle is required.
2. Any instruction which changes the contents of the PCL will also require 2 cycles for execution.

Extended Instruction Set

The extended instructions are used to support the full range address access for the data memory. When the accessed data memory is located in any data memory sector except sector 0, the extended instruction can be used to directly access the data memory instead of using the indirect addressing access. This can not only reduce the use of Flash memory space but also improve the CPU execution efficiency.

Mnemonic	Description	Cycles	Flag Affected
Arithmetic			
LADD A,[m]	Add Data Memory to ACC	2	Z, C, AC, OV, SC
LADDM A,[m]	Add ACC to Data Memory	2Note	Z, C, AC, OV, SC
LADC A,[m]	Add Data Memory to ACC with Carry	2	Z, C, AC, OV, SC
LADCM A,[m]	Add ACC to Data memory with Carry	2Note	Z, C, AC, OV, SC
LSUB A,[m]	Subtract Data Memory from ACC	2	Z, C, AC, OV, SC, CZ
LSUBM A,[m]	Subtract Data Memory from ACC with result in Data Memory	2Note	Z, C, AC, OV, SC, CZ
LSBC A,[m]	Subtract Data Memory from ACC with Carry	2	Z, C, AC, OV, SC, CZ
LSBCM A,[m]	Subtract Data Memory from ACC with Carry, result in Data Memory	2Note	Z, C, AC, OV, SC, CZ
LDAA [m]	Decimal adjust ACC for Addition with result in Data Memory	2Note	C
Logic Operation			
LAND A,[m]	Logical AND Data Memory to ACC	2	Z
LOR A,[m]	Logical OR Data Memory to ACC	2	Z
LXOR A,[m]	Logical XOR Data Memory to ACC	2	Z
LANDM A,[m]	Logical AND ACC to Data Memory	2Note	Z
LORM A,[m]	Logical OR ACC to Data Memory	2Note	Z
LXORM A,[m]	Logical XOR ACC to Data Memory	2Note	Z
LCPL [m]	Complement Data Memory	2Note	Z
LCPLA [m]	Complement Data Memory with result in ACC	2	Z
Increment & Decrement			
LINCA [m]	Increment Data Memory with result in ACC	2	Z
LINC [m]	Increment Data Memory	2Note	Z
LDECA [m]	Decrement Data Memory with result in ACC	2	Z
LDEC [m]	Decrement Data Memory	2Note	Z
Rotate			
LRRA [m]	Rotate Data Memory right with result in ACC	2	None
LRR [m]	Rotate Data Memory right	2Note	None
LRRCA [m]	Rotate Data Memory right through Carry with result in ACC	2	C
LRRC [m]	Rotate Data Memory right through Carry	2Note	C
LRLA [m]	Rotate Data Memory left with result in ACC	2	None
LRL [m]	Rotate Data Memory left	2Note	None
LRLCA [m]	Rotate Data Memory left through Carry with result in ACC	2	C
LRLC [m]	Rotate Data Memory left through Carry	2Note	C
Data Move			
LMOV A,[m]	Move Data Memory to ACC	2	None
LMOV [m],A	Move ACC to Data Memory	2Note	None
Bit Operation			
LCLR [m].i	Clear bit of Data Memory	2Note	None
LSET [m].i	Set bit of Data Memory	2Note	None

Mnemonic	Description	Cycles	Flag Affected
Branch			
LSZ [m]	Skip if Data Memory is zero	2[Note]	None
LSZA [m]	Skip if Data Memory is zero with data movement to ACC	2[Note]	None
LSNZ [m]	Skip if Data Memory is not zero	2[Note]	None
LSZ [m].i	Skip if bit i of Data Memory is zero	2[Note]	None
LSNZ [m].i	Skip if bit i of Data Memory is not zero	2[Note]	None
LSIZ [m]	Skip if increment Data Memory is zero	2[Note]	None
LSDZ [m]	Skip if decrement Data Memory is zero	2[Note]	None
LSIZA [m]	Skip if increment Data Memory is zero with result in ACC	2[Note]	None
LSDZA [m]	Skip if decrement Data Memory is zero with result in ACC	2[Note]	None
Table Read			
LTABRD [m]	Read table (specific page) to TBLH and Data Memory	3[Note]	None
LTABRDL [m]	Read table (last page) to TBLH and Data Memory	3[Note]	None
LITABRD [m]	Increment table pointer TBLP first and Read table (specific page) to TBLH and Data Memory	3[Note]	None
LITABRDL [m]	Increment table pointer TBLP first and Read table (last page) to TBLH and Data Memory	3[Note]	None
Miscellaneous			
LCLR [m]	Clear Data Memory	2[Note]	None
LSET [m]	Set Data Memory	2[Note]	None
LSWAP [m]	Swap nibbles of Data Memory	2[Note]	None
LSWAPA [m]	Swap nibbles of Data Memory with result in ACC	2	None

Note: 1. For these extended skip instructions, if the result of the comparison involves a skip then three cycles are required, if no skip takes place two cycles is required.
2. Any extended instruction which changes the contents of the PCL register will also require three cycles for execution.

Instruction Definition

ADC A,[m] Add Data Memory to ACC with Carry

Description The contents of the specified Data Memory, Accumulator and the carry flag are added. The result is stored in the Accumulator.

Operation ACC ← ACC + [m] + C

Affected flag(s) OV, Z, AC, C, SC

ADCM A,[m] Add ACC to Data Memory with Carry

Description The contents of the specified Data Memory, Accumulator and the carry flag are added. The result is stored in the specified Data Memory.

Operation [m] ← ACC + [m] + C

Affected flag(s) OV, Z, AC, C, SC

ADD A,[m] Add Data Memory to ACC

Description The contents of the specified Data Memory and the Accumulator are added. The result is stored in the Accumulator.

Operation ACC ← ACC + [m]

Affected flag(s) OV, Z, AC, C, SC

ADD A,x Add immediate data to ACC

Description The contents of the Accumulator and the specified immediate data are added. The result is stored in the Accumulator.

Operation ACC ← ACC + x

Affected flag(s) OV, Z, AC, C, SC

ADDM A,[m] Add ACC to Data Memory

Description The contents of the specified Data Memory and the Accumulator are added. The result is stored in the specified Data Memory.

Operation [m] ← ACC + [m]

Affected flag(s) OV, Z, AC, C, SC

AND A,[m] Logical AND Data Memory to ACC

Description Data in the Accumulator and the specified Data Memory perform a bitwise logical AND operation. The result is stored in the Accumulator.

Operation ACC ← ACC “AND” [m]

Affected flag(s) Z

AND A,x Logical AND immediate data to ACC

Description Data in the Accumulator and the specified immediate data perform a bit wise logical AND operation. The result is stored in the Accumulator.

Operation ACC ← ACC “AND” x

Affected flag(s) Z

ANDM A,[m]	Logical AND ACC to Data Memory
Description	Data in the specified Data Memory and the Accumulator perform a bitwise logical AND operation. The result is stored in the Data Memory.
Operation	[m] ← ACC "AND" [m]
Affected flag(s)	Z

CALL addr	Subroutine call
Description	Unconditionally calls a subroutine at the specified address. The Program Counter then increments by 1 to obtain the address of the next instruction which is then pushed onto the stack. The specified address is then loaded and the program continues execution from this new address. As this instruction requires an additional operation, it is a two cycle instruction.
Operation	Stack ← Program Counter + 1 Program Counter ← addr
Affected flag(s)	None

CLR [m]	Clear Data Memory
Description	Each bit of the specified Data Memory is cleared to 0.
Operation	[m] ← 00H
Affected flag(s)	None

CLR [m].i	Clear bit of Data Memory
Description	Bit i of the specified Data Memory is cleared to 0.
Operation	[m].i ← 0
Affected flag(s)	None

CLR WDT	Clear Watchdog Timer
Description	The TO, PDF flags and the WDT are all cleared.
Operation	WDT cleared TO ← 0 PDF ← 0
Affected flag(s)	TO, PDF

CPL [m]	Complement Data Memory
Description	Each bit of the specified Data Memory is logically complemented (1′s complement). Bits which previously contained a 1 are changed to 0 and vice versa.
Operation	[m] ← [m]
Affected flag(s)	Z

CPLA [m]	Complement Data Memory with result in ACC
Description	Each bit of the specified Data Memory is logically complemented (1′s complement). Bits which previously contained a 1 are changed to 0 and vice versa. The complemented result is stored in the Accumulator and the contents of the Data Memory remain unchanged.
Operation	ACC ← [m]
Affected flag(s)	Z

DAA [m] Decimal-Adjust ACC for addition with result in Data Memory

Description: Convert the contents of the Accumulator value to a BCD (Binary Coded Decimal) value resulting from the previous addition of two BCD variables. If the low nibble is greater than 9 or if AC flag is set, then a value of 6 will be added to the low nibble. Otherwise the low nibble remains unchanged. If the high nibble is greater than 9 or if the C flag is set, then a value of 6 will be added to the high nibble. Essentially, the decimal conversion is performed by adding 00H, 06H, 60H or 66H depending on the Accumulator and flag conditions. Only the C flag may be affected by this instruction which indicates that if the original BCD sum is greater than 100, it allows multiple precision decimal addition.

Operation: [m] ← ACC + 00H or
[m] ← ACC + 06H or
[m] ← ACC + 60H or
[m] ← ACC + 66H

Affected flag(s): C

DEC [m] Decrement Data Memory

Description: Data in the specified Data Memory is decremented by 1.

Operation: [m] ← [m] − 1

Affected flag(s): Z

DECA [m] Decrement Data Memory with result in ACC

Description: Data in the specified Data Memory is decremented by 1. The result is stored in the Accumulator. The contents of the Data Memory remain unchanged.

Operation: ACC ← [m] − 1

Affected flag(s): Z

HALT Enter power down mode

Description: This instruction stops the program execution and turns off the system clock. The contents of the Data Memory and registers are retained. The WDT and prescaler are cleared. The power down flag PDF is set and the WDT time-out flag TO is cleared.

Operation: TO ← 0
PDF ← 1

Affected flag(s): TO, PDF

INC [m] Increment Data Memory

Description: Data in the specified Data Memory is incremented by 1.

Operation: [m] ← [m] + 1

Affected flag(s): Z

INCA [m] Increment Data Memory with result in ACC

Description: Data in the specified Data Memory is incremented by 1. The result is stored in the Accumulator. The contents of the Data Memory remain unchanged.

Operation: ACC ← [m] + 1

Affected flag(s): Z

JMP addr	Jump unconditionally
Description	The contents of the Program Counter are replaced with the specified address. Program execution then continues from this new address. As this requires the insertion of a dummy instruction while the new address is loaded, it is a two cycle instruction.
Operation	Program Counter ← addr
Affected flag(s)	None

MOV A,[m]	Move Data Memory to ACC
Description	The contents of the specified Data Memory are copied to the Accumulator.
Operation	ACC ← [m]
Affected flag(s)	None

MOV A,x	Move immediate data to ACC
Description	The immediate data specified is loaded into the Accumulator.
Operation	ACC ← x
Affected flag(s)	None

MOV [m],A	Move ACC to Data Memory
Description	The contents of the Accumulator are copied to the specified Data Memory.
Operation	[m] ← ACC
Affected flag(s)	None

NOP	No operation
Description	No operation is performed. Execution continues with the next instruction.
Operation	No operation
Affected flag(s)	None

OR A,[m]	Logical OR Data Memory to ACC
Description	Data in the Accumulator and the specified Data Memory perform a bitwise logical OR operation. The result is stored in the Accumulator.
Operation	ACC ← ACC “OR” [m]
Affected flag(s)	Z

OR A,x	Logical OR immediate data to ACC
Description	Data in the Accumulator and the specified immediate data perform a bitwise logical OR operation. The result is stored in the Accumulator.
Operation	ACC ← ACC “OR” x
Affected flag(s)	Z

ORM A,[m]	Logical OR ACC to Data Memory
Description	Data in the specified Data Memory and the Accumulator perform a bitwise logical OR operation. The result is stored in the Data Memory.
Operation	[m] ← ACC “OR” [m]
Affected flag(s)	Z

RET	Return from subroutine
Description	The Program Counter is restored from the stack. Program execution continues at the restored address.
Operation	Program Counter ← Stack
Affected flag(s)	None

RET A,x	Return from subroutine and load immediate data to ACC
Description	The Program Counter is restored from the stack and the Accumulator loaded with the specified immediate data. Program execution continues at the restored address.
Operation	Program Counter ← Stack ACC ← x
Affected flag(s)	None

RETI	Return from interrupt
Description	The Program Counter is restored from the stack and the interrupts are re-enabled by setting the EMI bit. EMI is the master interrupt global enable bit. If an interrupt was pending when the RETI instruction is executed, the pending Interrupt routine will be processed before returning to the main program.
Operation	Program Counter ← Stack EMI ← 1
Affected flag(s)	None

RL [m]	Rotate Data Memory left
Description	The contents of the specified Data Memory are rotated left by 1 bit with bit 7 rotated into bit 0.
Operation	[m].(i+1) ← [m].i; (i=0~6) [m].0 ← [m].7
Affected flag(s)	None

RLA [m]	Rotate Data Memory left with result in ACC
Description	The contents of the specified Data Memory are rotated left by 1 bit with bit 7 rotated into bit 0. The rotated result is stored in the Accumulator and the contents of the Data Memory remain unchanged.
Operation	ACC.(i+1) ← [m].i; (i=0~6) ACC.0 ← [m].7
Affected flag(s)	None

RLC [m]	Rotate Data Memory left through Carry
Description	The contents of the specified Data Memory and the carry flag are rotated left by 1 bit. Bit 7 replaces the Carry bit and the original carry flag is rotated into bit 0.
Operation	[m].(i+1) ← [m].i; (i=0~6) [m].0 ← C C ← [m].7
Affected flag(s)	C

RLCA [m] Rotate Data Memory left through Carry with result in ACC

Description: Data in the specified Data Memory and the carry flag are rotated left by 1 bit. Bit 7 replaces the Carry bit and the original carry flag is rotated into the bit 0. The rotated result is stored in the Accumulator and the contents of the Data Memory remain unchanged.

Operation:
ACC.(i+1) ← [m].i; (i=0~6)
ACC.0 ← C
C ← [m].7

Affected flag(s): C

RR [m] Rotate Data Memory right

Description: The contents of the specified Data Memory are rotated right by 1 bit with bit 0 rotated into bit 7.

Operation:
[m].i ← [m].(i+1); (i=0~6)
[m].7 ← [m].0

Affected flag(s): None

RRA [m] Rotate Data Memory right with result in ACC

Description: Data in the specified Data Memory is rotated right by 1 bit with bit 0 rotated into bit 7. The rotated result is stored in the Accumulator and the contents of the Data Memory remain unchanged.

Operation:
ACC.i ← [m].(i+1); (i=0~6)
ACC.7 ← [m].0

Affected flag(s): None

RRC [m] Rotate Data Memory right through Carry

Description: The contents of the specified Data Memory and the carry flag are rotated right by 1 bit. Bit 0 replaces the Carry bit and the original carry flag is rotated into bit 7.

Operation:
[m].i ← [m].(i+1); (i=0~6)
[m].7 ← C
C ← [m].0

Affected flag(s): C

RRCA [m] Rotate Data Memory right through Carry with result in ACC

Description: Data in the specified Data Memory and the carry flag are rotated right by 1 bit. Bit 0 replaces the Carry bit and the original carry flag is rotated into bit 7. The rotated result is stored in the Accumulator and the contents of the Data Memory remain unchanged.

Operation:
ACC.i ← [m].(i+1); (i=0~6)
ACC.7 ← C
C ← [m].0

Affected flag(s): C

SBC A,[m] Subtract Data Memory from ACC with Carry

Description: The contents of the specified Data Memory and the complement of the carry flag are subtracted from the Accumulator. The result is stored in the Accumulator. Note that if the result of subtraction is negative, the C flag will be cleared to 0, otherwise if the result is positive or zero, the C flag will be set to 1.

Operation: ACC ← ACC − [m] − C

Affected flag(s): OV, Z, AC, C, SC, CZ

SBC A, x Subtract immediate data from ACC with Carry

Description The immediate data and the complement of the carry flag are subtracted from the Accumulator. The result is stored in the Accumulator. Note that if the result of subtraction is negative, the C flag will be cleared to 0, otherwise if the result is positive or zero, the C flag will be set to 1.

Operation ACC ← ACC – [m] – C

Affected flag(s) OV, Z, AC, C, SC, CZ

SBCM A,[m] Subtract Data Memory from ACC with Carry and result in Data Memory

Description The contents of the specified Data Memory and the complement of the carry flag are subtracted from the Accumulator. The result is stored in the Data Memory. Note that if the result of subtraction is negative, the C flag will be cleared to 0, otherwise if the result is positive or zero, the C flag will be set to 1.

Operation [m] ← ACC − [m] − C

Affected flag(s) OV, Z, AC, C, SC, CZ

SDZ [m] Skip if decrement Data Memory is 0

Description The contents of the specified Data Memory are first decremented by 1. If the result is 0 the following instruction is skipped. As this requires the insertion of a dummy instruction while the next instruction is fetched, it is a two cycle instruction. If the result is not 0 the program proceeds with the following instruction.

Operation [m] ← [m] − 1
Skip if [m]=0

Affected flag(s) None

SDZA [m] Skip if decrement Data Memory is zero with result in ACC

Description The contents of the specified Data Memory are first decremented by 1. If the result is 0, the following instruction is skipped. The result is stored in the Accumulator but the specified Data Memory contents remain unchanged. As this requires the insertion of a dummy instruction while the next instruction is fetched, it is a two cycle instruction. If the result is not 0, the program proceeds with the following instruction.

Operation ACC ← [m] − 1
Skip if ACC=0

Affected flag(s) None

SET [m] Set Data Memory

Description Each bit of the specified Data Memory is set to 1.

Operation [m] ← FFH

Affected flag(s) None

SET [m].i Set bit of Data Memory

Description Bit i of the specified Data Memory is set to 1.

Operation [m].i ← 1

Affected flag(s) None

SIZ [m] Skip if increment Data Memory is 0

Description The contents of the specified Data Memory are first incremented by 1. If the result is 0, the following instruction is skipped. As this requires the insertion of a dummy instruction while the next instruction is fetched, it is a two cycle instruction. If the result is not 0 the program proceeds with the following instruction.

Operation [m] ← [m] + 1
Skip if [m]=0

Affected flag(s) None

SIZA [m] Skip if increment Data Memory is zero with result in ACC

Description The contents of the specified Data Memory are first incremented by 1. If the result is 0, the following instruction is skipped. The result is stored in the Accumulator but the specified Data Memory contents remain unchanged. As this requires the insertion of a dummy instruction while the next instruction is fetched, it is a two cycle instruction. If the result is not 0 the program proceeds with the following instruction.

Operation ACC ← [m] + 1
Skip if ACC=0

Affected flag(s) None

SNZ [m].i Skip if bit i of Data Memory is not 0

Description If bit i of the specified Data Memory is not 0, the following instruction is skipped. As this requires the insertion of a dummy instruction while the next instruction is fetched, it is a two cycle instruction. If the result is 0 the program proceeds with the following instruction.

Operation Skip if [m].i ≠ 0

Affected flag(s) None

SNZ [m] Skip if Data Memory is not 0

Description The contents of the specified Data Memory are read out and then written back to the specified Data Memory again. If the specified Data Memory is not 0, the following instruction is skipped. As this requires the insertion of a dummy instruction while the next instruction is fetched, it is a two cycle instruction. If the result is 0 the program proceeds with the following instruction.

Operation Skip if [m]≠ 0

Affected flag(s) None

SUB A,[m] Subtract Data Memory from ACC

Description The specified Data Memory is subtracted from the contents of the Accumulator. The result is stored in the Accumulator. Note that if the result of subtraction is negative, the C flag will be cleared to 0, otherwise if the result is positive or zero, the C flag will be set to 1.

Operation ACC ← ACC − [m]

Affected flag(s) OV, Z, AC, C, SC, CZ

SUBM A,[m] Subtract Data Memory from ACC with result in Data Memory

Description The specified Data Memory is subtracted from the contents of the Accumulator. The result is stored in the Data Memory. Note that if the result of subtraction is negative, the C flag will be cleared to 0, otherwise if the result is positive or zero, the C flag will be set to 1.

Operation [m] ← ACC − [m]

Affected flag(s) OV, Z, AC, C, SC, CZ

SUB A,x Subtract immediate data from ACC

Description The immediate data specified by the code is subtracted from the contents of the Accumulator. The result is stored in the Accumulator. Note that if the result of subtraction is negative, the C flag will be cleared to 0, otherwise if the result is positive or zero, the C flag will be set to 1.

Operation ACC ← ACC − x

Affected flag(s) OV, Z, AC, C, SC, CZ

SWAP [m] Swap nibbles of Data Memory

Description The low-order and high-order nibbles of the specified Data Memory are interchanged.

Operation [m].3~[m].0 ↔ [m].7~[m].4

Affected flag(s) None

SWAPA [m] Swap nibbles of Data Memory with result in ACC

Description The low-order and high-order nibbles of the specified Data Memory are interchanged. The result is stored in the Accumulator. The contents of the Data Memory remain unchanged.

Operation ACC.3~ACC.0 ← [m].7~[m].4
ACC.7~ACC.4 ← [m].3~[m].0

Affected flag(s) None

SZ [m] Skip if Data Memory is 0

Description The contents of the specified Data Memory are read out and then written back to the specified Data Memory again. If the contents of the specified Data Memory is 0, the following instruction is skipped. As this requires the insertion of a dummy instruction while the next instruction is fetched, it is a two cycle instruction. If the result is not 0 the program proceeds with the following instruction.

Operation Skip if [m]=0

Affected flag(s) None

SZA [m] Skip if Data Memory is 0 with data movement to ACC

Description The contents of the specified Data Memory are copied to the Accumulator. If the value is zero, the following instruction is skipped. As this requires the insertion of a dummy instruction while the next instruction is fetched, it is a two cycle instruction. If the result is not 0 the program proceeds with the following instruction.

Operation ACC ← [m]
Skip if [m]=0

Affected flag(s) None

SZ [m].i Skip if bit i of Data Memory is 0

Description If bit i of the specified Data Memory is 0, the following instruction is skipped. As this requires the insertion of a dummy instruction while the next instruction is fetched, it is a two cycle instruction. If the result is not 0, the program proceeds with the following instruction.

Operation Skip if [m].i=0

Affected flag(s) None

TABRD [m] Read table (specific page) to TBLH and Data Memory

Description The low byte of the program code (specific page) addressed by the table pointer (TBLP and TBHP) is moved to the specified Data Memory and the high byte moved to TBLH.

Operation [m] ← program code (low byte)
TBLH ← program code (high byte)

Affected flag(s) None

TABRDL [m] Read table (last page) to TBLH and Data Memory

Description The low byte of the program code (last page) addressed by the table pointer (TBLP) is moved to the specified Data Memory and the high byte moved to TBLH.

Operation [m] ← program code (low byte)
TBLH ← program code (high byte)

Affected flag(s) None

ITABRD [m] Increment table pointer low byte first and read table (specific page) to TBLH and Data Memory Description Increment table pointer low byte, TBLP, first and then the program code (specific page) addressed by the table pointer (TBHP and TBLP) is moved to the specified Data Memory and the high byte moved to TBLH.

Operation [m] ← program code (low byte)

TBLH ← program code (high byte)

Affected flag(s) None

ITABRDL [m] Increment table pointer low byte first and read table (last page) to TBLH and Data Memory

Description Increment table pointer low byte, TBLP, first and then the low byte of the program code (last page) addressed by the table pointer (TBLP) is moved to the specified Data Memory and the high byte moved to TBLH.

Operation [m] ← program code (low byte)

TBLH ← program code (high byte)

Affected flag(s) None

XOR A,[m] Logical XOR Data Memory to ACC

Description Data in the Accumulator and the specified Data Memory perform a bitwise logical XOR operation. The result is stored in the Accumulator.

Operation ACC ← ACC "XOR" [m]

Affected flag(s) Z

XORM A,[m] Logical XOR ACC to Data Memory

Description Data in the specified Data Memory and the Accumulator perform a bitwise logical XOR operation. The result is stored in the Data Memory.

Operation [m] ← ACC "XOR" [m]

Affected flag(s) Z

XOR A,x Logical XOR immediate data to ACC

Description Data in the Accumulator and the specified immediate data perform a bitwise logical XOR operation. The result is stored in the Accumulator.

Operation ACC ← ACC "XOR" x

Affected flag(s) Z

Extended Instruction Definition

The extended instructions are used to directly access the data stored in any data memory sections.

LADC A,[m] Add Data Memory to ACC with Carry

Description The contents of the specified Data Memory, Accumulator and the carry flag are added. The result is stored in the Accumulator.

Operation ACC ← ACC + [m] + C

Affected flag(s) OV, Z, AC, C, SC

LADCM A,[m] Add ACC to Data Memory with Carry

Description The contents of the specified Data Memory, Accumulator and the carry flag are added. The result is stored in the specified Data Memory.

Operation [m] ← ACC + [m] + C

Affected flag(s) OV, Z, AC, C, SC

LADD A,[m] Add Data Memory to ACC

Description The contents of the specified Data Memory and the Accumulator are added. The result is stored in the Accumulator.

Operation ACC ← ACC + [m]

Affected flag(s) OV, Z, AC, C, SC

LADDM A,[m] Add ACC to Data Memory

Description The contents of the specified Data Memory and the Accumulator are added. The result is stored in the specified Data Memory.

Operation [m] ← ACC + [m]

Affected flag(s) OV, Z, AC, C, SC

LAND A,[m] Logical AND Data Memory to ACC

Description Data in the Accumulator and the specified Data Memory perform a bitwise logical AND operation. The result is stored in the Accumulator.

Operation ACC ← ACC “AND” [m]

Affected flag(s) Z

LANDM A,[m] Logical AND ACC to Data Memory

Description Data in the specified Data Memory and the Accumulator perform a bitwise logical AND operation. The result is stored in the Data Memory.

Operation [m] ← ACC “AND” [m]

Affected flag(s) Z

LCLR [m] Clear Data Memory

Description Each bit of the specified Data Memory is cleared to 0.

Operation [m] ← 00H

Affected flag(s) None

LCLR [m].i Clear bit of Data Memory

Description Bit i of the specified Data Memory is cleared to 0.

Operation [m].i ← 0

Affected flag(s) None

LCPL [m] Complement Data Memory

Description Each bit of the specified Data Memory is logically complemented (1′s complement). Bits which previously contained a 1 are changed to 0 and vice versa.

Operation [m] ← [m]

Affected flag(s) Z

LCPLA [m] Complement Data Memory with result in ACC

Description Each bit of the specified Data Memory is logically complemented (1′s complement). Bits which previously contained a 1 are changed to 0 and vice versa. The complemented result is stored in the Accumulator and the contents of the Data Memory remain unchanged.

Operation ACC ← [m]

Affected flag(s) Z

LDAA [m] Decimal-Adjust ACC for addition with result in Data Memory

Description Convert the contents of the Accumulator value to a BCD (Binary Coded Decimal) value resulting from the previous addition of two BCD variables. If the low nibble is greater than 9 or if AC flag is set, then a value of 6 will be added to the low nibble. Otherwise the low nibble remains unchanged. If the high nibble is greater than 9 or if the C flag is set, then a value of 6 will be added to the high nibble. Essentially, the decimal conversion is performed by adding 00H, 06H, 60H or 66H depending on the Accumulator and flag conditions. Only the C flag may be affected by this instruction which indicates that if the original BCD sum is greater than 100, it allows multiple precision decimal addition.

Operation [m] ← ACC + 00H or
[m] ← ACC + 06H or
[m] ← ACC + 60H or
[m] ← ACC + 66H

Affected flag(s) C

LDEC [m] Decrement Data Memory

Description Data in the specified Data Memory is decremented by 1.

Operation [m] ← [m] − 1

Affected flag(s) Z

LDECA [m] Decrement Data Memory with result in ACC

Description Data in the specified Data Memory is decremented by 1. The result is stored in the Accumulator. The contents of the Data Memory remain unchanged.

Operation ACC ← [m] − 1

Affected flag(s) Z

LINC [m] Increment Data Memory

Description Data in the specified Data Memory is incremented by 1.

Operation [m] ← [m] + 1

Affected flag(s) Z

LINCA [m] Increment Data Memory with result in ACC

Description Data in the specified Data Memory is incremented by 1. The result is stored in the Accumulator. The contents of the Data Memory remain unchanged.

Operation ACC ← [m] + 1

Affected flag(s) Z

LMOV A,[m] Move Data Memory to ACC

Description The contents of the specified Data Memory are copied to the Accumulator.

Operation ACC ← [m]

Affected flag(s) None

LMOV [m],A Move ACC to Data Memory

Description The contents of the Accumulator are copied to the specified Data Memory.

Operation [m] ← ACC

Affected flag(s) None

LOR A,[m] Logical OR Data Memory to ACC

Description Data in the Accumulator and the specified Data Memory perform a bitwise logical OR operation. The result is stored in the Accumulator.

Operation ACC ← ACC “OR” [m]

Affected flag(s) Z

LORM A,[m] Logical OR ACC to Data Memory

Description Data in the specified Data Memory and the Accumulator perform a bitwise logical OR operation. The result is stored in the Data Memory.

Operation [m] ← ACC “OR” [m]

Affected flag(s) Z

LRL [m] Rotate Data Memory left

Description The contents of the specified Data Memory are rotated left by 1 bit with bit 7 rotated into bit 0.

Operation [m].(i+1) ← [m].i; (i=0~6)
[m].0 ← [m].7

Affected flag(s) None

LRLA [m] Rotate Data Memory left with result in ACC

Description The contents of the specified Data Memory are rotated left by 1 bit with bit 7 rotated into bit 0. The rotated result is stored in the Accumulator and the contents of the Data Memory remain unchanged.

Operation ACC.(i+1) ← [m].i; (i=0~6)
ACC.0 ← [m].7

Affected flag(s) None

LRLC [m] Rotate Data Memory left through Carry

Description The contents of the specified Data Memory and the carry flag are rotated left by 1 bit. Bit 7 replaces the Carry bit and the original carry flag is rotated into bit 0.

Operation [m].(i+1) ← [m].i; (i=0~6)
[m].0 ← C
C ← [m].7

Affected flag(s) C

LRLCA [m] Rotate Data Memory left through Carry with result in ACC

Description Data in the specified Data Memory and the carry flag are rotated left by 1 bit. Bit 7 replaces the Carry bit and the original carry flag is rotated into the bit 0. The rotated result is stored in theAccumulator and the contents of the Data Memory remain unchanged.

Operation ACC.(i+1) ← [m].i; (i=0~6)
ACC.0 ← C
C ← [m].7

Affected flag(s) C

LRR [m] Rotate Data Memory right

Description The contents of the specified Data Memory are rotated right by 1 bit with bit 0 rotated into bit 7.

Operation [m].i ← [m].(i+1); (i=0~6)
[m].7 ← [m].0

Affected flag(s) None

LRRA [m] Rotate Data Memory right with result in ACC

Description Data in the specified Data Memory is rotated right by 1 bit with bit 0 rotated into bit 7. The rotated result is stored in the Accumulator and the contents of the Data Memory remain unchanged.

Operation ACC.i ← [m].(i+1); (i=0~6)
ACC.7 ← [m].0

Affected flag(s) None

LRRC [m] Rotate Data Memory right through Carry

Description The contents of the specified Data Memory and the carry flag are rotated right by 1 bit. Bit 0 replaces the Carry bit and the original carry flag is rotated into bit 7.

Operation [m].i ← [m].(i+1); (i=0~6)
[m].7 ← C
C ← [m].0

Affected flag(s) C

LRRCA [m] Rotate Data Memory right through Carry with result in ACC

Description Data in the specified Data Memory and the carry flag are rotated right by 1 bit. Bit 0 replaces the Carry bit and the original carry flag is rotated into bit 7. The rotated result is stored in the Accumulator and the contents of the Data Memory remain unchanged.

Operation ACC.i ← [m].(i+1); (i=0~6)
ACC.7 ← C
C ← [m].0

Affected flag(s) C

LSBC A,[m] Subtract Data Memory from ACC with Carry

Description The contents of the specified Data Memory and the complement of the carry flag are subtracted from the Accumulator. The result is stored in the Accumulator. Note that if the result of subtraction is negative, the C flag will be cleared to 0, otherwise if the result is positive or zero, the C flag will be set to 1.

Operation ACC ← ACC − [m] − C

Affected flag(s) OV, Z, AC, C, SC, CZ

LSBCM A,[m] Subtract Data Memory from ACC with Carry and result in Data Memory

Description The contents of the specified Data Memory and the complement of the carry flag are subtracted from the Accumulator. The result is stored in the Data Memory. Note that if the result of subtraction is negative, the C flag will be cleared to 0, otherwise if the result is positive or zero, the C flag will be set to 1.

Operation [m] ← ACC − [m] − C

Affected flag(s) OV, Z, AC, C, SC, CZ

LSDZ [m] Skip if decrement Data Memory is 0

Description The contents of the specified Data Memory are first decremented by 1. If the result is 0 the following instruction is skipped. As this requires the insertion of a dummy instruction while the next instruction is fetched, it is a three cycle instruction. If the result is not 0 the program proceeds with the following instruction.

Operation [m] ← [m] − 1
Skip if [m]=0

Affected flag(s) None

LSDZA [m] Skip if decrement Data Memory is zero with result in ACC

Description The contents of the specified Data Memory are first decremented by 1. If the result is 0, the following instruction is skipped. The result is stored in the Accumulator but the specified Data Memory contents remain unchanged. As this requires the insertion of a dummy instruction while the next instruction is fetched, it is a three cycle instruction. If the result is not 0, the program proceeds with the following instruction.

Operation ACC ← [m] − 1
Skip if ACC=0

Affected flag(s) None

LSET [m] Set Data Memory

Description Each bit of the specified Data Memory is set to 1.

Operation [m] ← FFH

Affected flag(s) None

LSET [m].i Set bit of Data Memory

Description Bit i of the specified Data Memory is set to 1.

Operation [m].i ← 1

Affected flag(s) None

LSIZ [m] Skip if increment Data Memory is 0

Description The contents of the specified Data Memory are first incremented by 1. If the result is 0, the following instruction is skipped. As this requires the insertion of a dummy instruction while the next instruction is fetched, it is a three cycle instruction. If the result is not 0 the program proceeds with the following instruction.

Operation [m] ← [m] + 1
Skip if [m]=0

Affected flag(s) None

LSIZA [m] Skip if increment Data Memory is zero with result in ACC

Description The contents of the specified Data Memory are first incremented by 1. If the result is 0, the following instruction is skipped. The result is stored in the Accumulator but the specified Data Memory contents remain unchanged. As this requires the insertion of a dummy instruction while the next instruction is fetched, it is a three cycle instruction. If the result is not 0 the program proceeds with the following instruction.

Operation ACC ← [m] + 1
Skip if ACC=0

Affected flag(s) None

LSNZ [m].i Skip if bit i of Data Memory is not 0

Description If bit i of the specified Data Memory is not 0, the following instruction is skipped. As this requires the insertion of a dummy instruction while the next instruction is fetched, it is a three cycle instruction. If the result is 0 the program proceeds with the following instruction.

Operation Skip if [m].i ≠ 0

Affected flag(s) None

LSNZ [m] Skip if Data Memory is not 0

Description The contents of the specified Data Memory are read out and then written to the specified Data Memory again. If the content of the specified Data Memory is not 0, the following instruction is skipped. As this requires the insertion of a dummy instruction while the next instruction is fetched, it is a three cycle instruction. If the result is 0 the program proceeds with the following instruction.

Operation Skip if [m] ≠ 0

Affected flag(s) None

LSUB A,[m] Subtract Data Memory from ACC

Description The specified Data Memory is subtracted from the contents of the Accumulator. The result is stored in the Accumulator. Note that if the result of subtraction is negative, the C flag will be cleared to 0, otherwise if the result is positive or zero, the C flag will be set to 1.

Operation ACC ← ACC − [m]

Affected flag(s) OV, Z, AC, C, SC, CZ

LSUBM A,[m] Subtract Data Memory from ACC with result in Data Memory

Description The specified Data Memory is subtracted from the contents of the Accumulator. The result is stored in the Data Memory. Note that if the result of subtraction is negative, the C flag will be cleared to 0, otherwise if the result is positive or zero, the C flag will be set to 1.

Operation [m] ← ACC − [m]

Affected flag(s) OV, Z, AC, C, SC, CZ

LSWAP [m] Swap nibbles of Data Memory

Description The low-order and high-order nibbles of the specified Data Memory are interchanged.

Operation [m].3~[m].0 ↔ [m].7~[m].4

Affected flag(s) None

LSWAPA [m] Swap nibbles of Data Memory with result in ACC

Description The low-order and high-order nibbles of the specified Data Memory are interchanged. The result is stored in the Accumulator. The contents of the Data Memory remain unchanged.

Operation ACC.3~ACC.0 ← [m].7~[m].4
ACC.7~ACC.4 ← [m].3~[m].0

Affected flag(s) None

LSZ [m] Skip if Data Memory is 0

Description The contents of the specified Data Memory are read out and then written to the specified Data Memory again. If the contents of the specified Data Memory is 0, the following instruction is skipped. As this requires the insertion of a dummy instruction while the next instruction is fetched, it is a three cycle instruction. If the result is not 0 the program proceeds with the following instruction.

Operation Skip if [m]=0

Affected flag(s) None

LSZA [m] Skip if Data Memory is 0 with data movement to ACC

Description The contents of the specified Data Memory are copied to the Accumulator. If the value is zero, the following instruction is skipped. As this requires the insertion of a dummy instruction while the next instruction is fetched, it is a three cycle instruction. If the result is not 0 the program proceeds with the following instruction.

Operation ACC ← [m]
Skip if [m]=0

Affected flag(s) None

LSZ [m].i Skip if bit i of Data Memory is 0

Description If bit i of the specified Data Memory is 0, the following instruction is skipped. As this requires the insertion of a dummy instruction while the next instruction is fetched, it is a three cycle instruction. If the result is not 0, the program proceeds with the following instruction.

Operation Skip if [m].i=0

Affected flag(s) None

LTABRD [m] Read table (specific page) to TBLH and Data Memory

Description The low byte of the program code (specific page) addressed by the table pointer (TBHP and TBLP) is moved to the specified Data Memory and the high byte moved to TBLH.

Operation [m] ← program code (low byte)
TBLH ← program code (high byte)

Affected flag(s) None

LTABRDL [m] Read table (last page) to TBLH and Data Memory

Description The low byte of the program code (last page) addressed by the table pointer (TBLP) is moved to the specified Data Memory and the high byte moved to TBLH.

Operation [m] ← program code (low byte)
TBLH ← program code (high byte)

Affected flag(s) None

LITABRD [m] Increment table pointer low byte first and read table (specific page) to TBLH and Data Memory

Description Increment table pointer low byte, TBLP, first and then the program code (specific page) addressed by the table pointer (TBHP and TBLP) is moved to the specified Data Memory and the high byte moved to TBLH.

Operation [m] ← program code (low byte)

TBLH ← program code (high byte)

Affected flag(s) None

LITABRDL [m] Increment table pointer low byte first and read table (last page) to TBLH and Data Memory

Description Increment table pointer low byte, TBLP, first and then the low byte of the program code (last page) addressed by the table pointer (TBLP) is moved to the specified Data Memory and the high byte moved to TBLH.

Operation [m] ← program code (low byte)

TBLH ← program code (high byte)

Affected flag(s) None

LXOR A,[m] Logical XOR Data Memory to ACC

Description Data in the Accumulator and the specified Data Memory perform a bitwise logical XOR operation. The result is stored in the Accumulator.

Operation ACC ← ACC “XOR” [m]

Affected flag(s) Z

LXORM A,[m] Logical XOR ACC to Data Memory

Description Data in the specified Data Memory and the Accumulator perform a bitwise logical XOR operation. The result is stored in the Data Memory.

Operation [m] ← ACC “XOR” [m]

Affected flag(s) Z

Package Information

Note that the package information provided here is for consultation purposes only. As this information may be updated at regular intervals users are reminded to consult the Holtek website for the latest version of the Package/Carton Information.

Additional supplementary information with regard to packaging is listed below. Click on the relevant section to be transferred to the relevant website page.

- Package Information (include Outline Dimensions, Product Tape and Reel Specifications)
- The Operation Instruction of Packing Materials
- Carton information

16-pin NSOP (150mil) Outline Dimensions

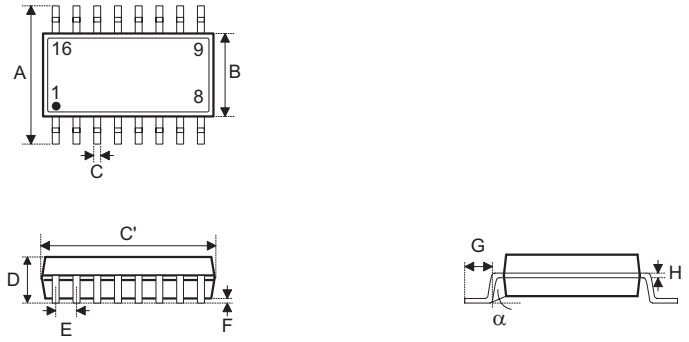

Symbol	Dimensions in inch		
	Min.	Nom.	Max.
A		0.236 BSC	
B		0.154 BSC	
C	0.012	—	0.020
C’		0.390 BSC	
D	—	—	0.069
E		0.050 BSC	
F	0.004	—	0.010
G	0.016	—	0.050
H	0.004	—	0.010
α	0°	—	8°

Symbol	Dimensions in mm		
	Min.	Nom.	Max.
A		6.00 BSC	
B		3.90 BSC	
C	0.31	—	0.51
C’		9.90 BSC	
D	—	—	1.75
E		1.27 BSC	
F	0.10	—	0.25
G	0.40	—	1.27
H	0.10	—	0.25
α	0°	—	8°

Copyright© 2025 by HOLTEK SEMICONDUCTOR INC. All Rights Reserved.

The information provided in this document has been produced with reasonable care and attention before publication, however, HOLTEK does not guarantee that the information is completely accurate. The information contained in this publication is provided for reference only and may be superseded by updates. HOLTEK disclaims any expressed, implied or statutory warranties, including but not limited to suitability for commercialization, satisfactory quality, specifications, characteristics, functions, fitness for a particular purpose, and non-infringement of any third-party's rights. HOLTEK disclaims all liability arising from the information and its application. In addition, HOLTEK does not recommend the use of HOLTEK's products where there is a risk of personal hazard due to malfunction or other reasons. HOLTEK hereby declares that it does not authorise the use of these products in life-saving, life-sustaining or safety critical components. Any use of HOLTEK's products in life-saving/sustaining or safety applications is entirely at the buyer's risk, and the buyer agrees to defend, indemnify and hold HOLTEK harmless from any damages, claims, suits, or expenses resulting from such use. The information provided in this document, including but not limited to the content, data, examples, materials, graphs, and trademarks, is the intellectual property of HOLTEK (and its licensors, where applicable) and is protected by copyright law and other intellectual property laws. No license, express or implied, to any intellectual property right, is granted by HOLTEK herein. HOLTEK reserves the right to revise the information described in the document at any time without prior notice. For the latest information, please contact us.