Version:2.0

SPECIFICATION

*HY*HX8817-084XS1

er Approved

_____

_____

_____

☐

Approved By _____

Prepared By _____

Date: 2005.1.10

www.DataSheet4U.com

CONTENTS

General Description……3

Features ……3

Applications ……3

Driving Board Function Block ……4

Connector Pin Definition……7

Outline Dimension ……8

www.DataSheet4U.com

General Description:

This color TFT LCD timing control board apply to drive PVI's **PW084XS1(16:9)** Color TFT LCD Panel, it supports 18 bits parallel RGB input interface, with the build-in color space conversion circuit, DAC, and operation amplified, the driving board performs gamma correction and polarity inverted functions to converts the digital data to the proper interface of LCD Panel with 8 different zoom in/out display modes on different display resolutions.

Features:

- Fit PVI **PW084XS1(16:9)** series TFT LCD
- Ultra Compact
- Support 18 bits parallels data input
- Up/Down Display Reverse
- Left/Right Display Reverse

Applications:

- Security
- Video Game
- Door Phone
- Video Phone
- Portable TV
- Instrument Display

Video input signal:

- 18 bits parallel RGB input

Work temperature:

- -20^0C—$+70^0$C

Storage temperature:

- -30^0C—$+80^0$C

Driving Board Function Block:

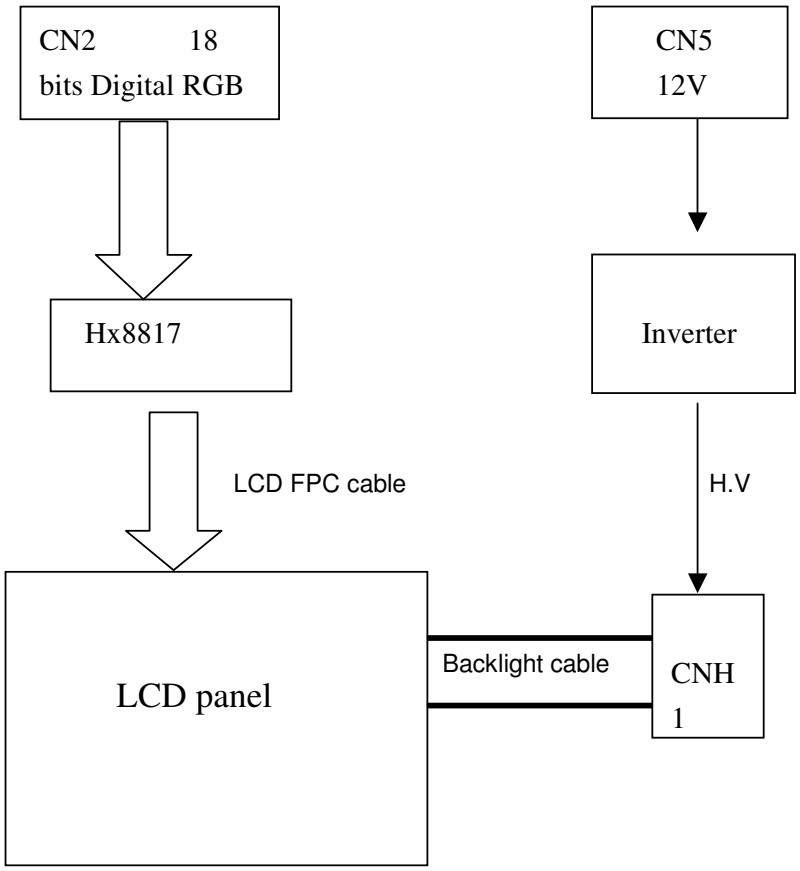

Input / Output Connector

1.) CN2: Power & 18 bits parallels RGB digital Video Input Connector

Pin No. : 31, Molex DB9A-31P or compatibility

2.) CN5: Invert power and control signal Input Connector

Pin No. : 4, Pitch: 2.0 mm, **JST B4B-XH-A or compatibility**

3.) CN1A &CN1B: LCD Signal Output Connector

FPC Down Connector, 30 Pins, Pitch: 0.5 mm

4.) CNH1: Backlight High Voltage Connector

Pin No. : 2, Pitch: 3.5 mm JST BHSR-02VS-1or compatibility

Connector Pin Definition

CN2 pin definition

No.	Pin Name	NO.	Pin Name
1	GND	17	G4
2	CLK	18	G5
3	HS	19	GND
4	VS	20	B0
5	GND	21	B1
6	R0	22	B2
7	R1	23	B3
8	R2	24	B4
9	R3	25	B5
10	R4	26	GND
11	R5	27	DE
12	GND	28	VCC
13	G0	29	VCC
14	G1	30	L/R
15	G2	31	U/D
16	G3		

CN5 pin definition

No.	Pin Name	I/O	Pin description	Remark
1	+12V	I	12VDC POWER INPUT	
2	GND	I	INVERT POWER GROUND	
3	ON/OFF	I	INVERT ON/OFF CONTROL	0:OFF 1:ON
4	BRIGHT	I	BACKLIGHT BRIGHTNESS ADJUST	

(1) CNH1 pin definition

No.	Pin Name	I/O		Remark
1	HV	O	Lamp driving terminal (high voltage)	
2	LV	O	Lamp driving terminal (low voltage)	

(2) CN1A & CN1B pin definition

CN1B Meets **PW084XS1(16:9)** input definition

Note 1:

R/L = Hi (+5V) for shift right, Low (GND) for shift left

Note 2:

U/D = Hi (+5V) for down, Low (GND) for up

Outline Dimension

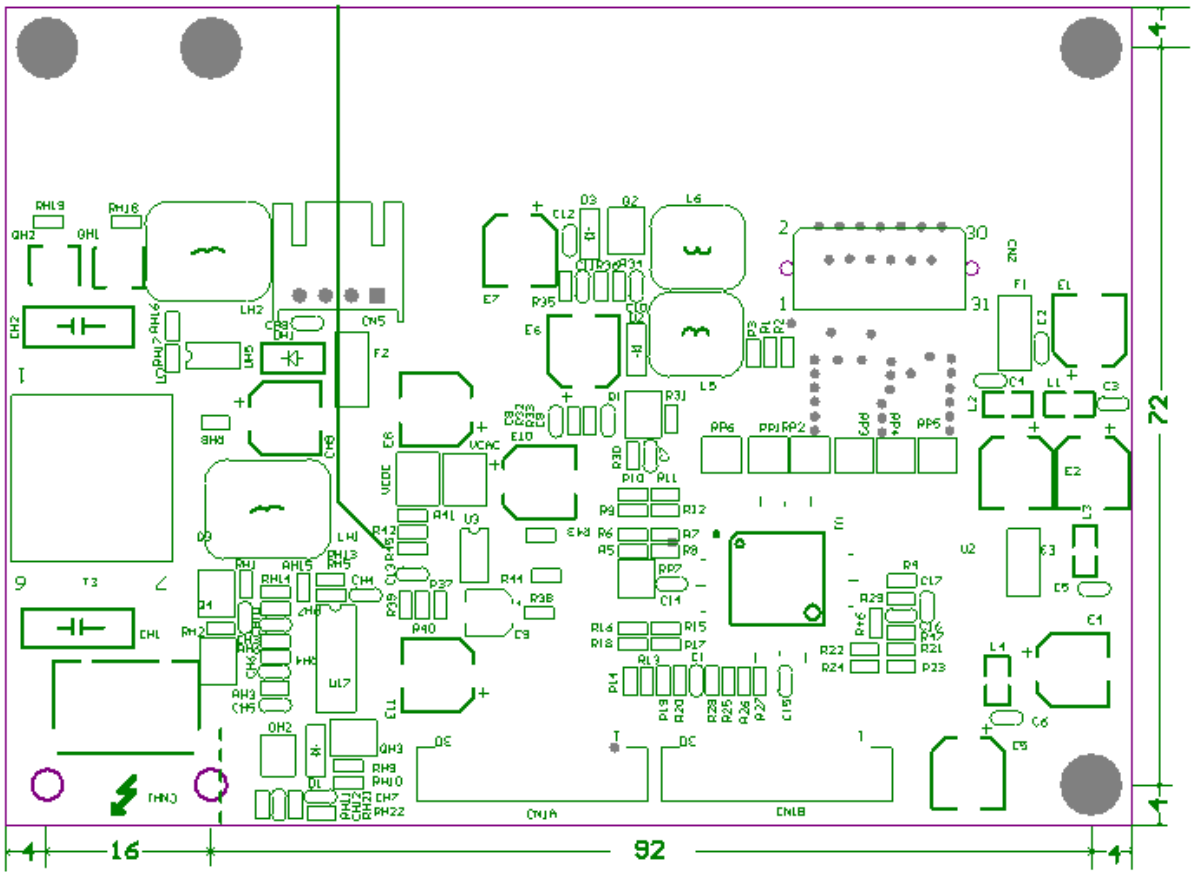

Description:

Outline: 110.0*80.0*10.1mm

Top Layer High (Max): 8.5mm

Board thickness: 1.6mm

6 Screws: M3.0

Weight: 0.05kg