N-Channel Power MOSFET
(8A, 500Volts)

DESCRIPTION

The Nell **IRF840** are N-Channel enhancement mode silicon gate power field effect transistors. They are designed, tested and guaranteed to withstand a specified level of energy in the breakdown avalanche mode of operation.

They are designed as an extremely efficient and reliable device for use in a wide variety of applications such as switching regulators. convertors, UPS, switching mode power supplies and drivers for high power bipolar switching transistors requiring high speed and low gate drive power. These transistors can be operated directly from integrated circuits.

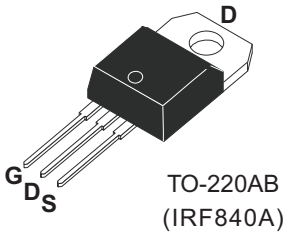

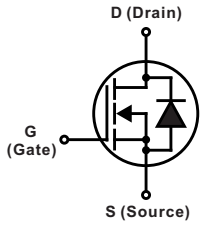

FEATURES

- $R_{DS(ON)}$ = 0.85Ω @ V_{GS} = 10V
- Ultra low gate charge(63nC Max.)
- Low reverse transfer capacitance (C_{RSS} = 120pF typical)
- Fast switching capability
- 100% avalanche energy specified
- Improved dv/dt capability
- 150°C operation temperature

PRODUCT SUMMARY	
I_D (A)	8
V_{DSS} (V)	500
$R_{DS(ON)}$ (Ω)	0.85 @ V_{GS} = 10V
Q_G(nC) max.	63

ABSOLUTE MAXIMUM RATINGS (T_C = 25°C unless otherwise specified)

SYMBOL	PARAMETER	TEST CONDITIONS	VALUE	UNIT
V_{DSS}	Drain to Source voltage(Note 1)	T_J=25°C to 150°C	500	V
V_{DGR}	Drain to Gate voltage	R_{GS}=20KΩ	500	
V_{GS}	Gate to Source voltage		±20	
I_D	Continuous Drain Current	V_{GS}=10V, T_C=25°C	8	A
		V_{GS}=10V, T_C=100°C	5.1	
I_{DM}	Pulsed Drain current(Note 1)		32	
I_{AR}	Repetitive avalanche current(Note 1)		8	
E_{AR}	Repetitive avalanche energy(Note 1)	I_{AR}=8A, R_{GS}=50Ω, V_{GS}=10V	13	mJ
E_{AS}	Single pulse avalanche energy(Note 2)	I_{AS}=8A, L=14mH	510	mJ
dv/dt	Peak diode recovery dv/dt(Note 3)		3.5	V /ns
P_D	Total power dissipation	T_C=25°C	125	W
	Derating factor above 25°C		1	W /°C
T_J	Operation junction temperature		-55 to 150	°C
T_{STG}	Storage temperature		-55 to 150	
T_L	Maximum soldering temperature, for 10 seconds	1.6mm from case	300	
	Mounting torque, #6-32 or M3 screw		10 (1.1)	lbf·in (N·m)

Note: 1.Repetitive rating: pulse width limited by junction temperature.
2.V_{DD} = 50V, L=14mH, I_{AS}=8A, R_G =25Ω, starting T_J =25°C
3.I_{SD} ≤ 8A, di/dt ≤ 100A/μs, V_{DD} ≤ $V_{(BR)DSS}$, T_J ≤ 150°C.

THERMAL RESISTANCE

SYMBOL	PARAMETER	Min.	Typ.	Max.	UNIT
$R_{th(j-c)}$	Thermal resistance, junction to case			1	°C/W
$R_{th(c-s)}$	Thermal resistance, case to heatsink		0.50		
$R_{th(j-a)}$	Thermal resistance, junction to ambient			62	

ELECTRICAL CHARACTERISTICS (T_C = 25°C unless otherwise specified)

SYMBOL	PARAMETER	TEST CONDITIONS		Min.	Typ.	Max.	UNIT
$V_{(BR)DSS}$	Drain to source breakdown voltage	I_D = 250μA ,V_{GS} = 0V		500			V
$\Delta V_{(BR)DSS}/\Delta T_J$	Breakdown voltage temperature coefficient	I_D = 1mA, referenced to 25 °C			0.78		V/ºC
I_{DSS}	Drain to source leakage current	V_{DS}=500V, V_{GS}=0V	T_C = 25°C			25	μA
		V_{DS}=400V, V_{GS}=0V	T_J=125°C			250	
I_{GSS}	Gate to source forward leakage current	V_{GS} = 20V, V_{DS} = 0V				100	nA
	Gate to source reverse leakage current	V_{GS} = -20V, V_{DS} = 0V				-100	
$R_{DS(ON)}$	Static drain to source on-state resistance	V_{GS} = 10V, I_D = 4.8A (Note 1),				0.85	Ω
$V_{GS(TH)}$	Gate threshold voltage	V_{GS}=V_{DS}, I_D=250μA		2		4	V
g_{fs}	Forward transconductance	V_{DS}=50V, I_D=4.8A		4.9			S
C_{ISS}	Input capacitance	V_{DS} = 25V, V_{GS} = 0V, f =1MHz			13000		pF
C_{OSS}	Output capacitance				310		
C_{RSS}	Reverse transfer capacitance				120		
$t_{d(ON)}$	Turn-on delay time	V_{DD} = 250V, I_D = 8A, R_D = 31Ω, V_{GS} = 10V, R_G =9.1Ω (Note 1)			14		ns
t_r	Rise time				23		
$t_{d(OFF)}$	Turn-off delay time				49		
t_f	Fall time				20		
L_D	Internal drain inductance	Between lead, 6mm from package and center of die			4.5		nH
L_S	internal source inductance				7.5		
Q_G	Total gate charge	V_{DS} = 400V, V_{GS} = 10V, I_D = 8A				63	nC
Q_{GS}	Gate to source charge					9.5	
Q_{GD}	Gate to drain charge (Miller charge)					32	

SOURCE TO DRAIN DIODE RATINGS AND CHARACTERISTICS (T_C = 25°C unless otherwise specified)

SYMBOL	PARAMETER	TEST CONDITIONS	Min.	Typ.	Max.	UNIT
V_{SD}	Diode forward voltage	I_{SD} = 8A, V_{GS} = 0V			2	V
Is (I_{SD})	Continuous source to drain current	Integral reverse P-N junction diode in the MOSFET 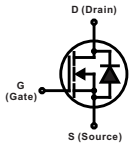			8	A
I_{SM}	Pulsed source current				32	
t_{rr}	Reverse recovery time	I_S = 8A, V_{GS} = 0V, dI_F/dt = 100A/μs		460	970	ns
Q_{rr}	Reverse recovery charge			4.2	8.9	μC
t_{ON}	Forward turn-on time	Intrinsic turn-on time is negligible (turn-on is domonated by L_S+L_D)				

Note: 1. Pulse test: Pulse width ≤ 300μs, duty cycle ≤ 2%.

ORDERING INFORMATION SCHEME

IRF 840 A

MOSFET series

N-Channel, IRF series

Current & Voltage rating, I_D & V_{DS}

8A / 500V

Package type

A = TO-220AB

Fig.1 Typical output characteristics, T_C =25°C

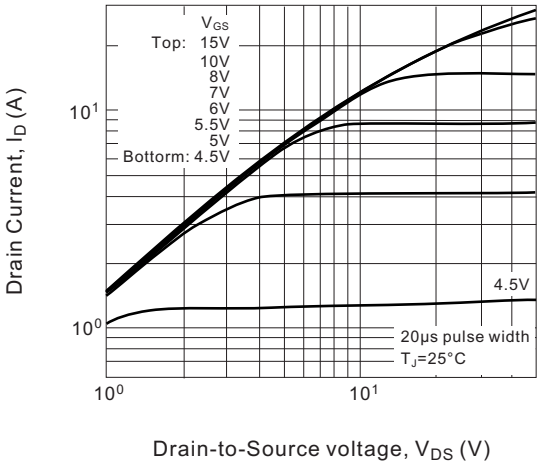

Fig.2 Typical output characteristics, T_C =150°C

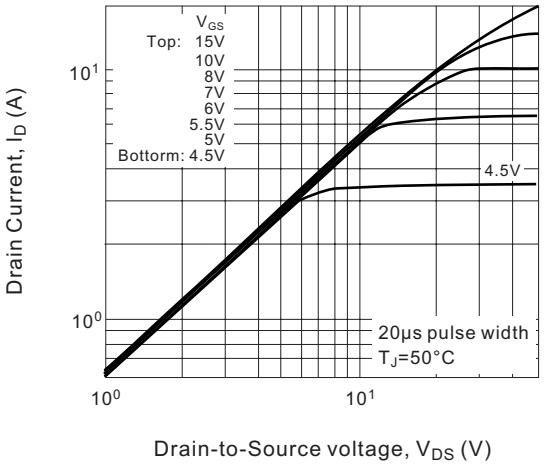

Fig.3 Typical transfer characteristics

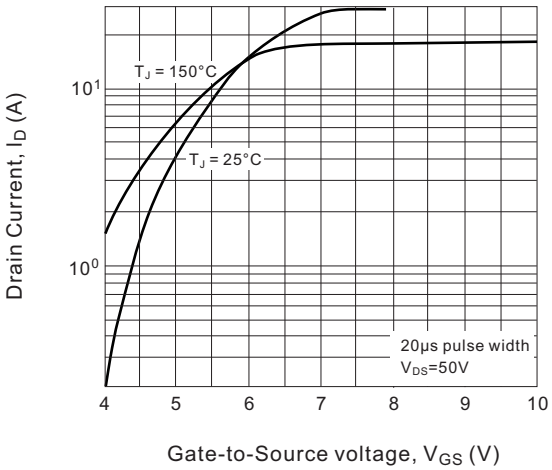

Fig.4 Normalized On-Resistance vs. Temperature

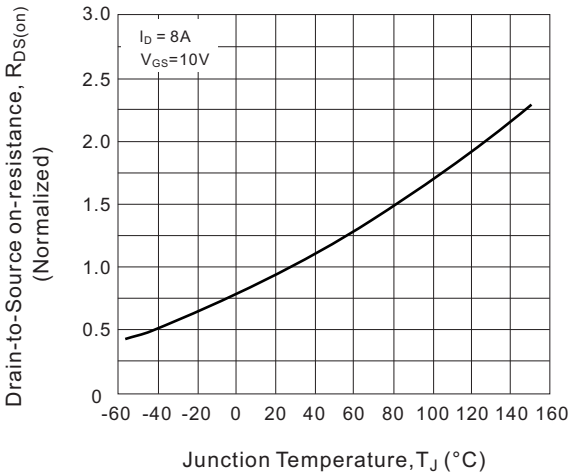

Fig.5 Typical capacitance vs. Drain-to-Source voltage

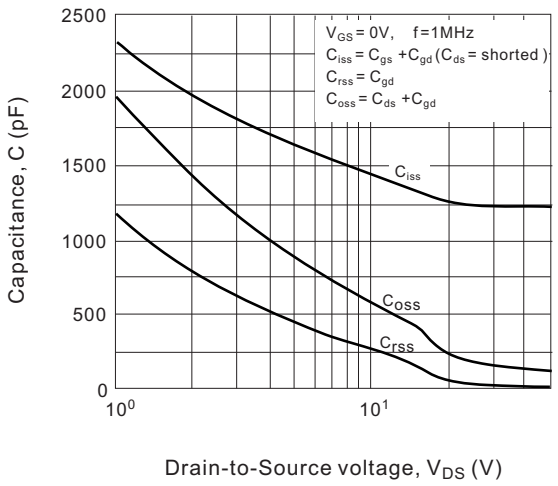

Fig.6 Typical gate charge vs. Drain-to-Source voltage

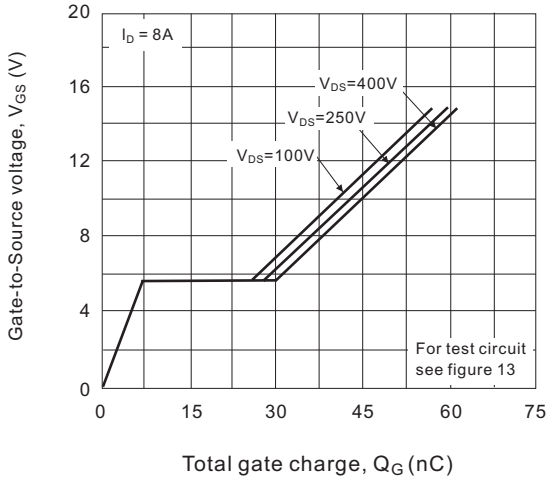

Fig.7 Typical Source-Drain diode forward voltage

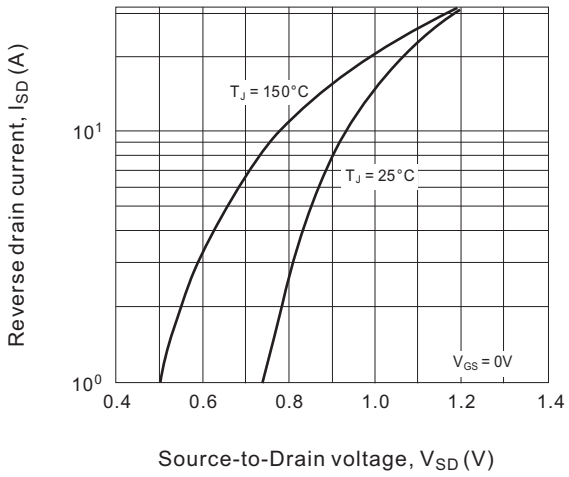

Fig.8 Maximum safe operating area

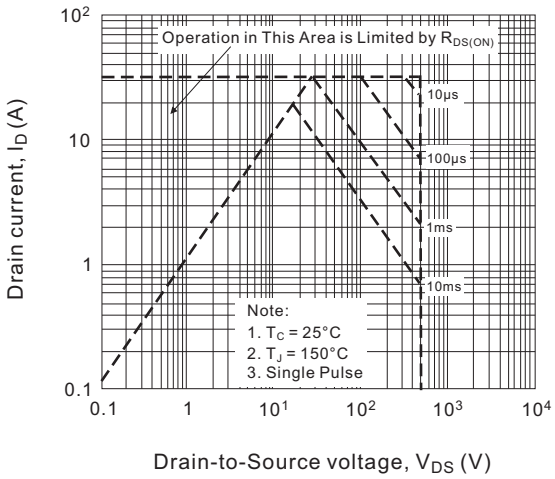

Fig.9 Maximum drain current vs. Case temperature

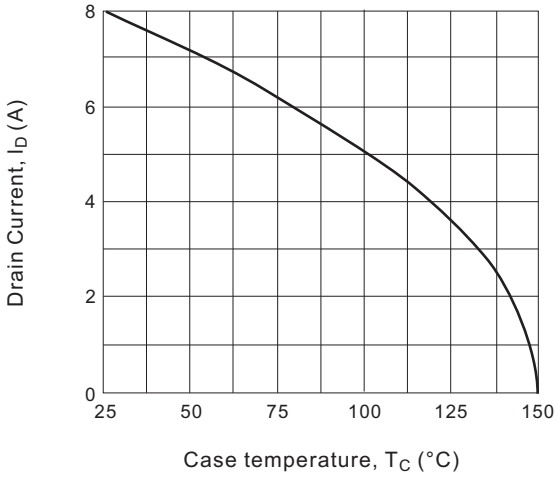

Fig.10 Maximum effective transient thermal Impedance, Junction-to-Case

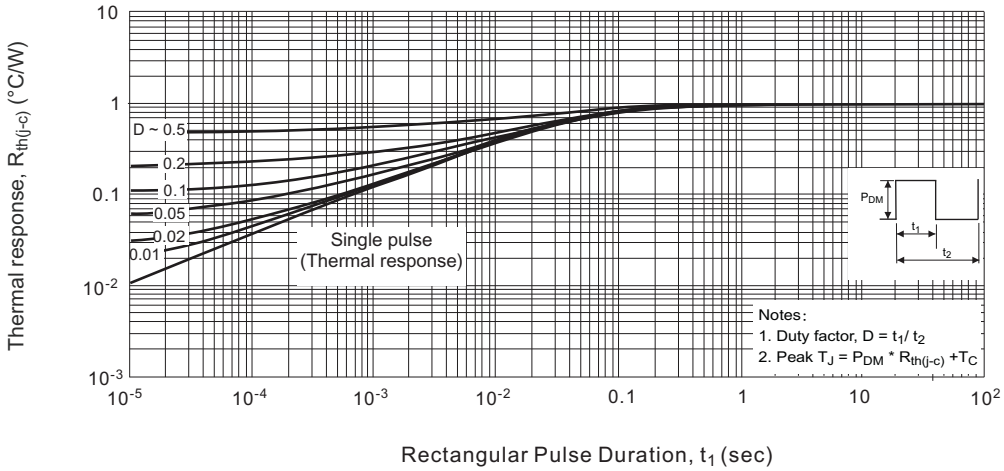

Fig.11a. Switching time test circuit

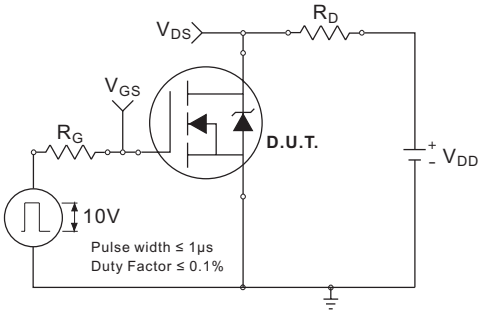

Fig.11b. Switching time waveforms

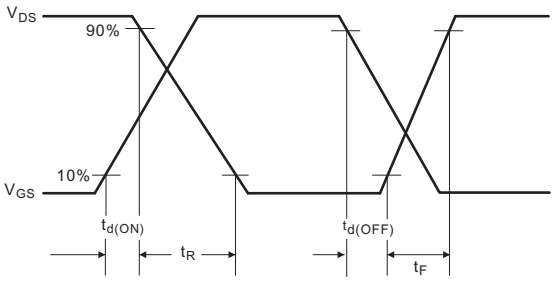

Fig.12a. Unclamped Inductive test circuit

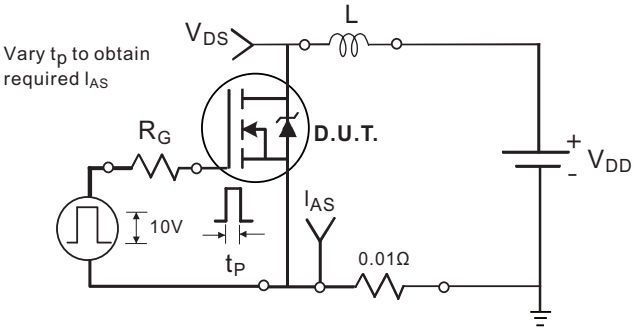

Fig.12b. Unclamped Inductive waveforms

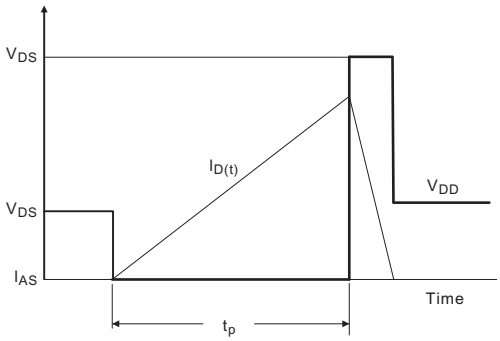

Fig.12c. Maximum avalanche energy vs. Drain current

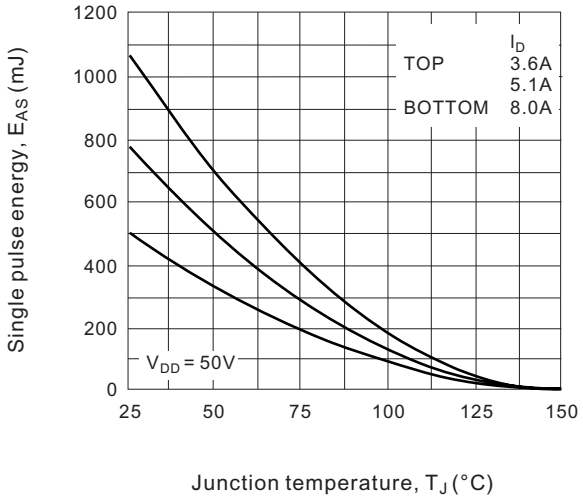

Fig.13a. Basic gate charge waveform

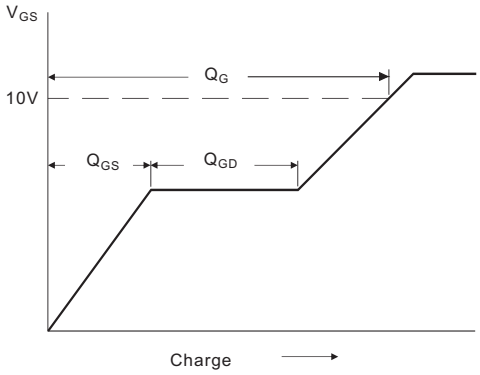

Fig.13b. Gate charge test circuit

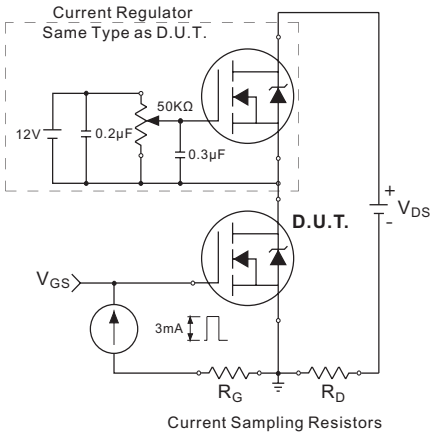

Fig.14 Peak diode recovery dv/dt test circuit for N-Channel MOSFET

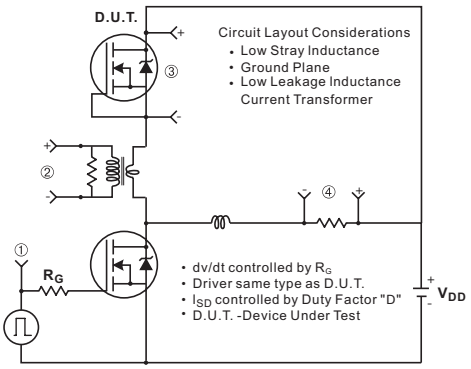

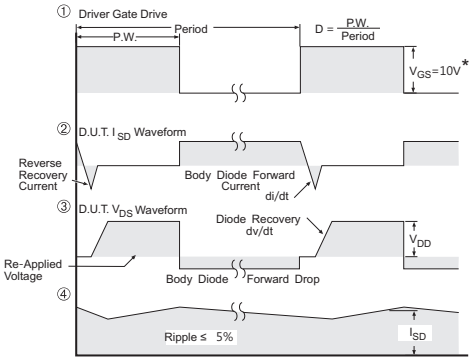

*V_{GS} = 5V for Logic Level Devices

Case Style

TO-220AB

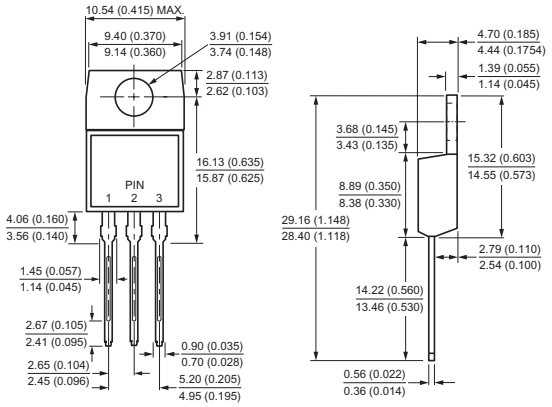

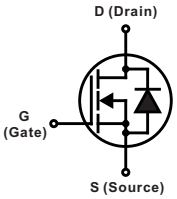

All dimensions in millimeters(inches)