HEXFET® Power MOSFET

Applications

- High Frequency Synchronous Buck Converters for Computer Processor Power
- High Frequency Isolated DC-DC Converters with Synchronous Rectification for Telecom and Industrial Use

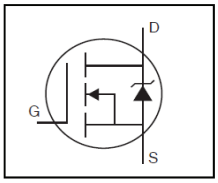

V_{DSS}	30V
$R_{DS(on)}$ max	9.5mΩ
Qg	9.6nC

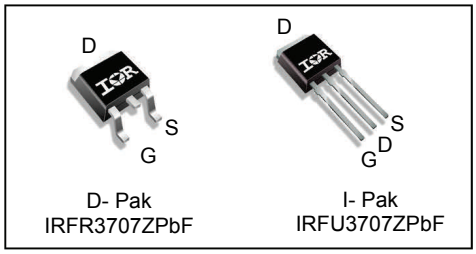

D- Pak
IRFR3707ZPbF

I- Pak
IRFU3707ZPbF

Benefits

- Very Low $R_{DS(on)}$ at 4.5V V_{GS}
- Ultra - Low Gate Impedance
- Fully Characterized Avalanche Voltage and Current
- Lead-Free

G	D	S
Gate	Drain	Source

Base part number	Package Type	Standard Pack		Orderable Part Number
		Form	Quantity	
IRFU3707ZPbF	I-Pak	Tube	75	IRFU3707ZPbF
IRFR3707ZPbF	D-Pak	Tube	75	IRFR3707ZPbF
		Tape and Reel Left	3000	IRFR3707ZTRLPbF

Absolute Maximum Ratings

Symbol	Parameter	Max.	Units
V_{DS}	Drain -to-Source Voltage	30	V
V_{GS}	Gate-to-Source Voltage	± 20	V
I_D @ T_C = 25°C	Continuous Drain Current, V_{GS} @ 10V	56④	A
I_D @ T_C = 100°C	Continuous Drain Current, V_{GS} @ 10V	39④	
I_{DM}	Pulsed Drain Current ①	220	
P_D @T_C = 25°C	Maximum Power Dissipation	50	W
P_D @T_C = 100°C	Maximum Power Dissipation	25	W
	Linear Derating Factor	0.33	W/°C
T_J T_{STG}	Operating Junction and Storage Temperature Range	-55 to + 175	°C
	Soldering Temperature, for 10 seconds (1.6mm from case)	300	

Thermal Resistance

Symbol	Parameter	Typ.	Max.	Units
$R_{\theta JC}$	Junction-to-Case	——	3.0	°C/W
$R_{\theta JA}$	Junction-to-Ambient (PCB Mount) ⑤	——	50	
$R_{\theta JA}$	Junction-to-Ambient	——	110	

Notes ① through ⑤ are on page 2.

Static @ T_J = 25°C (unless otherwise specified)

	Parameter	Min.	Typ.	Max.	Units	Conditions
$V_{(BR)DSS}$	Drain-to-Source Breakdown Voltage	30	—	—	V	V_{GS} = 0V, I_D = 250μA
$\Delta V_{(BR)DSS}/\Delta T_J$	Breakdown Voltage Temp. Coefficient	—	0.023	—	V/°C	Reference to 25°C, I_D = 1mA
$R_{DS(on)}$	Static Drain-to-Source On-Resistance	—	7.5	9.5	mΩ	V_{GS} = 10V, I_D = 15A ③
		—	10	12.5		V_{GS} = 4.5V, I_D = 12A ③
$V_{GS(th)}$	Gate Threshold Voltage	1.35	1.80	2.25	V	V_{DS} = V_{GS}, I_D = 25μA
$\Delta V_{GS(th)}/\Delta T_J$	Gate Threshold Voltage Temp. Coefficient	—	-5.0	—	mV/°C	
I_{DSS}	Drain-to-Source Leakage Current	—	—	1.0	μA	V_{DS} = 24V, V_{GS} = 0V
		—	—	150		V_{DS} = 24V,V_{GS} = 0V,T_J =125°C
I_{GSS}	Gate-to-Source Forward Leakage	—	—	100	nA	V_{GS} = 20V
	Gate-to-Source Reverse Leakage	—		-100		V_{GS} = -20V
gfs	Forward Trans conductance	71	—	—	S	V_{DS} = 15V, I_D = 12A
Q_g	Total Gate Charge	—	9.6	14	nC	V_{DS} = 15V V_{GS} = 4.5V I_D = 12A See Fig. 16
Q_{gs1}	Pre-Vth Gate-to-Source Charge	—	2.6	—		
Q_{gs2}	Post-Vth Gate-to-Source Charge	—	0.90	—		
Q_{gd}	Gate-to-Drain Charge	—	3.5	—		
Q_{godr}	Gate Charge Overdrive	—	2.6	—		
Q_{sw}	Switch Charge (Q_{gs2} + Q_{gd})	—	4.4	—		
Q_{oss}	Output Charge	—	5.8	—	nC	V_{DS} = 15V, V_{GS} = 0V
$t_{d(on)}$	Turn-On Delay Time	—	8.0	—	ns	V_{DD} = 16V,V_{GS} = 4.5V ③ I_D = 12A Clamped Inductive Load
t_r	Rise Time	—	11	—		
$t_{d(off)}$	Turn-Off Delay Time	—	12	—		
t_f	Fall Time	—	3.3	—		
C_{iss}	Input Capacitance	—	1150	—	pF	V_{GS} = 0V V_{DS} = 15V f = 1.0MHz
C_{oss}	Output Capacitance	—	260	—		
C_{rss}	Reverse Transfer Capacitance	—	120	—		

Avalanche Characteristics

	Parameter	Max.	Units
E_{AS}	Single Pulse Avalanche Energy ②	42	mJ
I_{AR}	Avalanche Current ①	12	A
E_{AR}	Repetitive Avalanche Energy ①	5.0	mJ

Diode Characteristics

	Parameter	Min.	Typ.	Max.	Units	Conditions
I_S	Continuous Source Current (Body Diode)	—	—	56④	A	MOSFET symbol showing the integral reverse p-n junction diode. 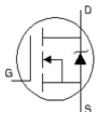
I_{SM}	Pulsed Source Current (Body Diode) ①	—	—	220		
V_{SD}	Diode Forward Voltage	—	—	1.0	V	T_J = 25°C,I_S = 12A,V_{GS} = 0V ③
t_{rr}	Reverse Recovery Time	—	25	38	ns	T_J = 25°C ,I_F = 12A, V_{DS} = 15V
Q_{rr}	Reverse Recovery Charge	—	17	26	nC	di/dt = 100A/μs ③
t_{on}	Forward Turn-On Time	Intrinsic turn-on time is negligible (turn-on is dominated by L_S+L_D)				

Notes:

① Repetitive rating; pulse width limited by max. junction temperature
② starting T_J = 25°C, L = 0.58mH, R_G = 25Ω, I_{AS} = 12A.
③ Pulse width ≤ 400μs; duty cycle ≤ 2%.
④ Calculated continuous current based on maximum allowable junction temperature. Package limitation current is 30A.
⑤ When mounted on 1" square PCB (FR-4 or G-10 Material). For recommended footprint and soldering techniques refer to application note #AN-994.

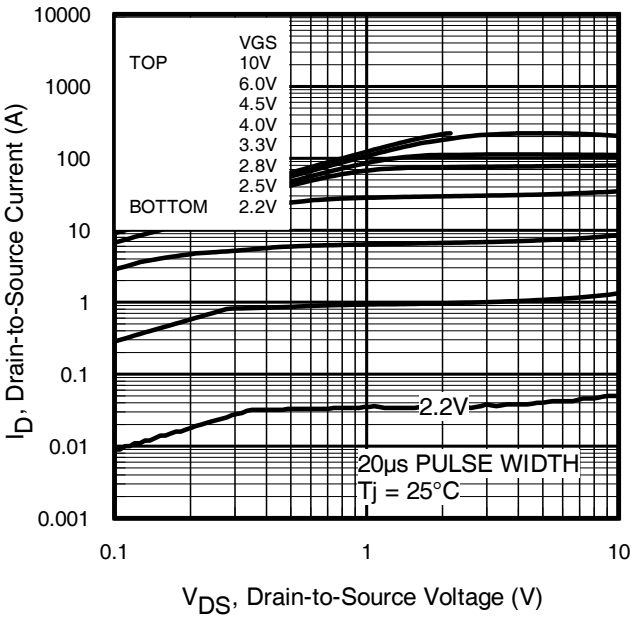

Fig. 1 Typical Output Characteristics

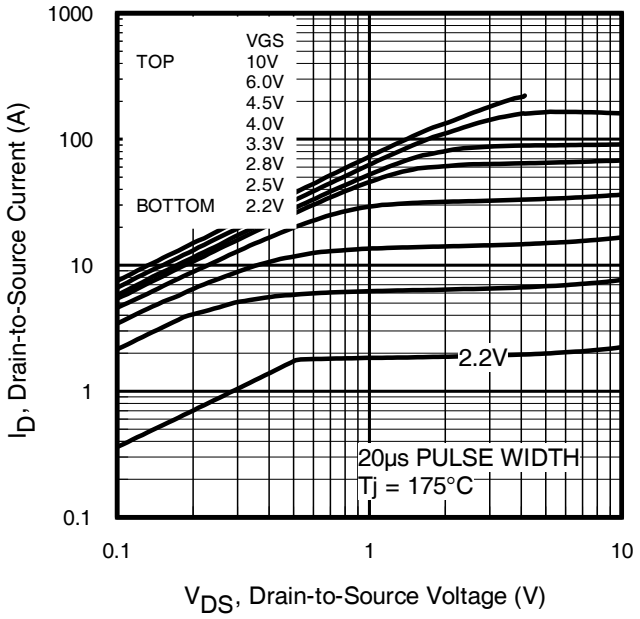

Fig. 2 Typical Output Characteristics

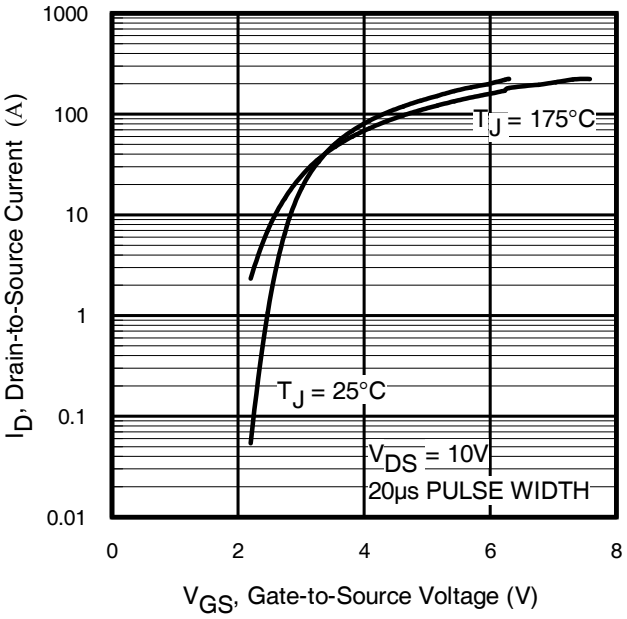

Fig. 3 Typical Transfer Characteristics

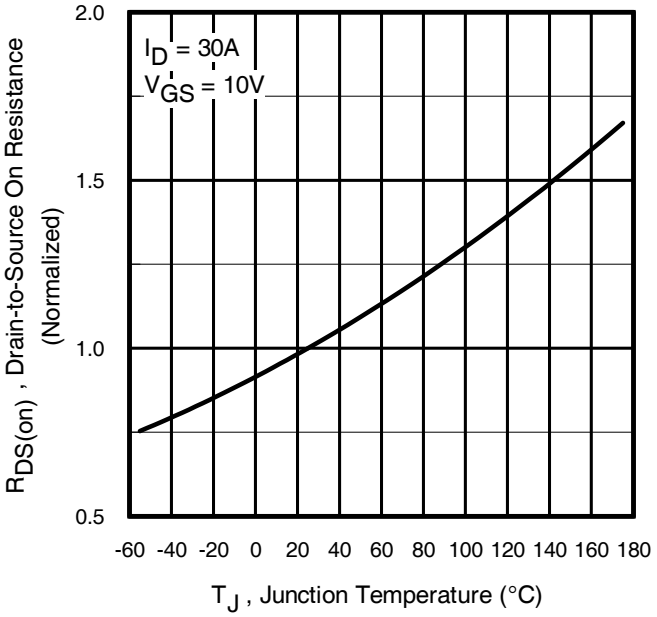

Fig. 4 Normalized On-Resistance vs. Temperature

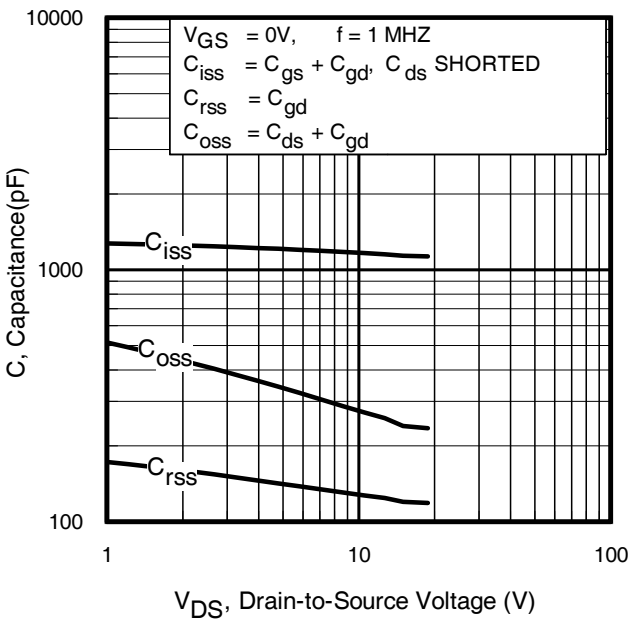

Fig 5. Typical Capacitance vs. Drain-to-Source Voltage

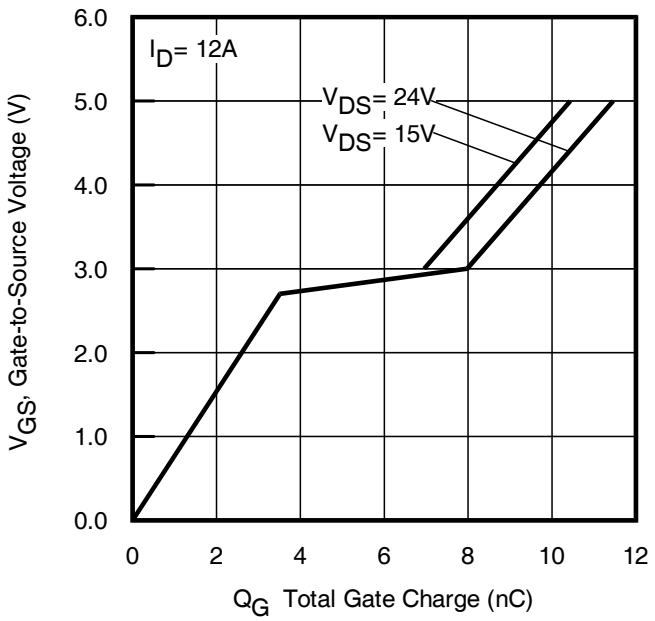

Fig 6. Typical Gate Charge vs. Gate-to-Source Voltage

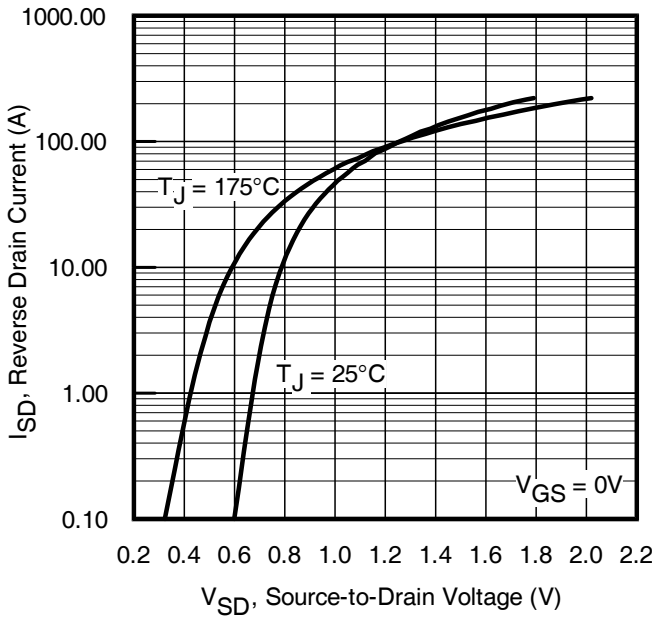

Fig. 7 Typical Source-to-Drain Diode Forward Voltage

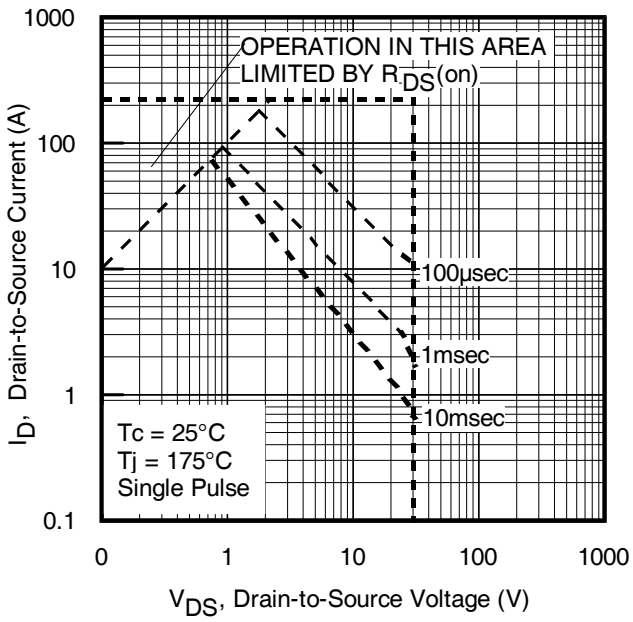

Fig 8. Maximum Safe Operating Area

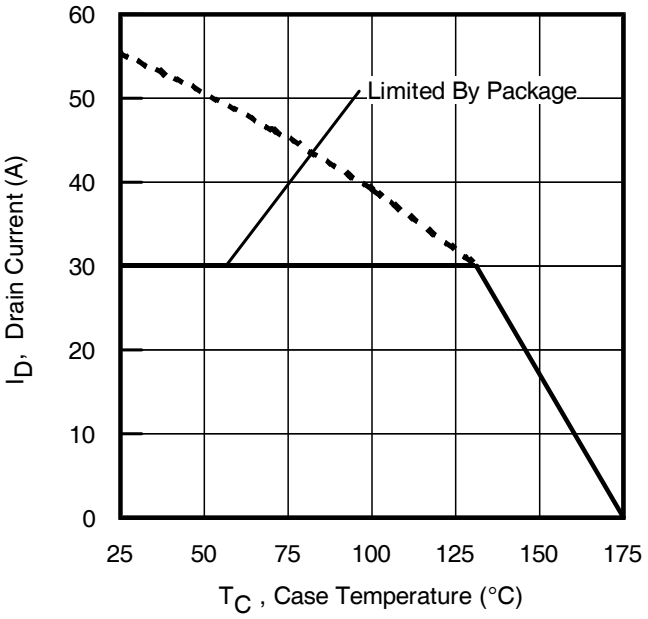

Fig 9. Maximum Drain Current vs. Case Temperature

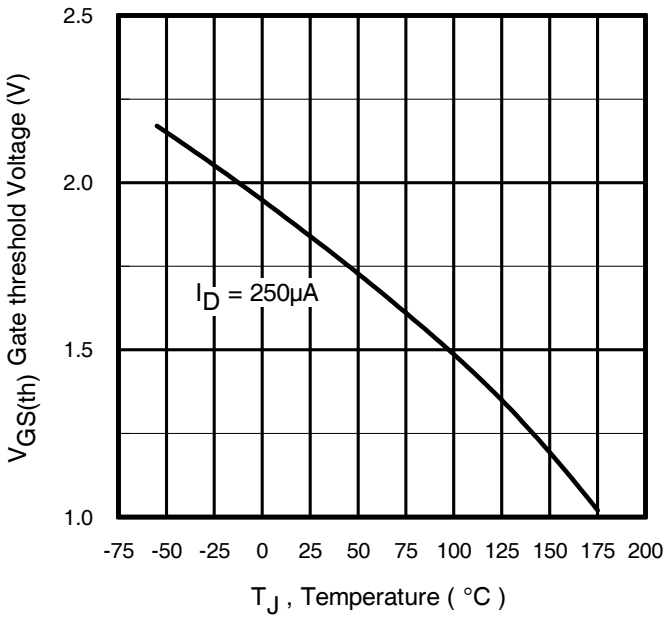

Fig 10. Threshold Voltage vs. Temperature

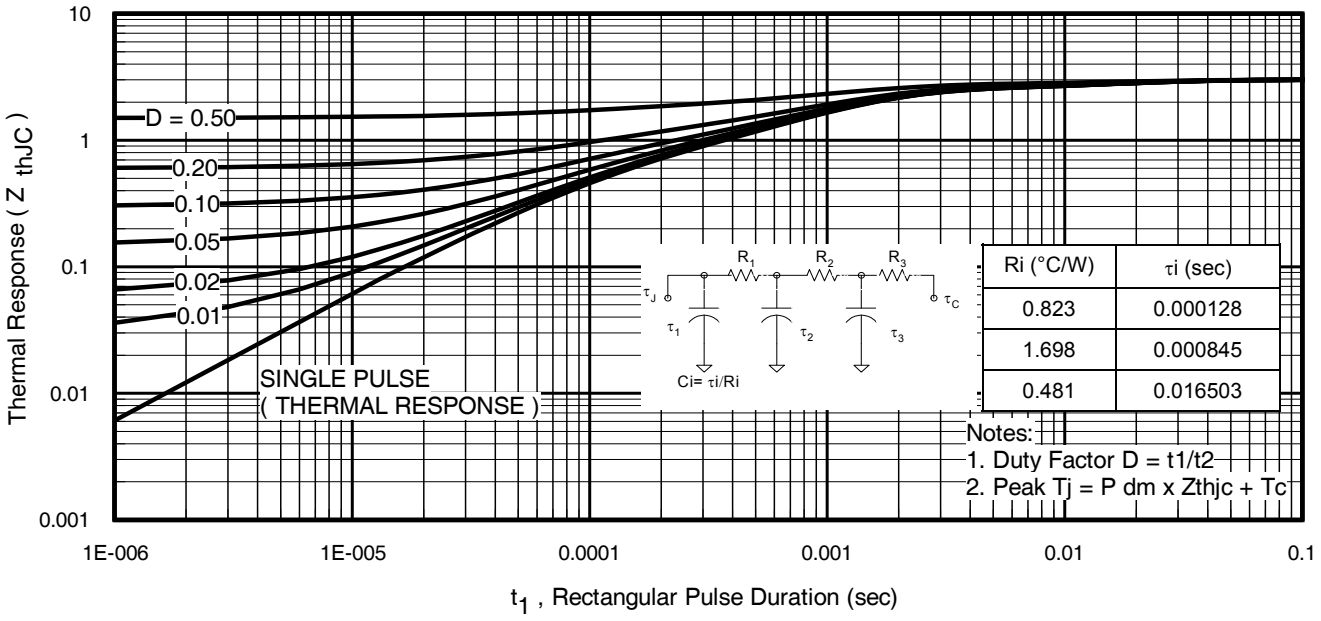

Fig 11. Maximum Effective Transient Thermal Impedance, Junction-to-Case

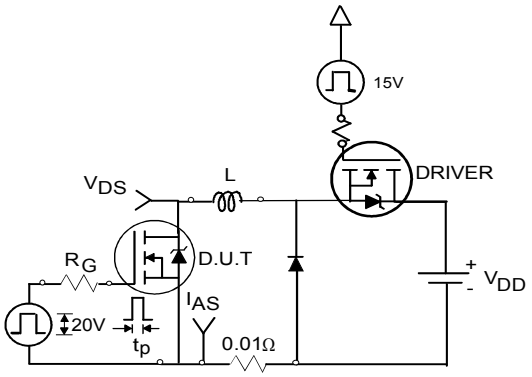

Fig 12a. Unclamped Inductive Test Circuit

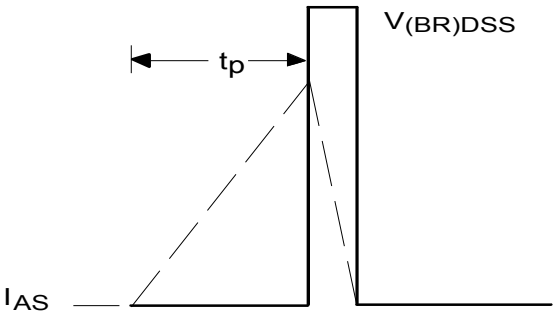

Fig 12b. Unclamped Inductive Waveforms

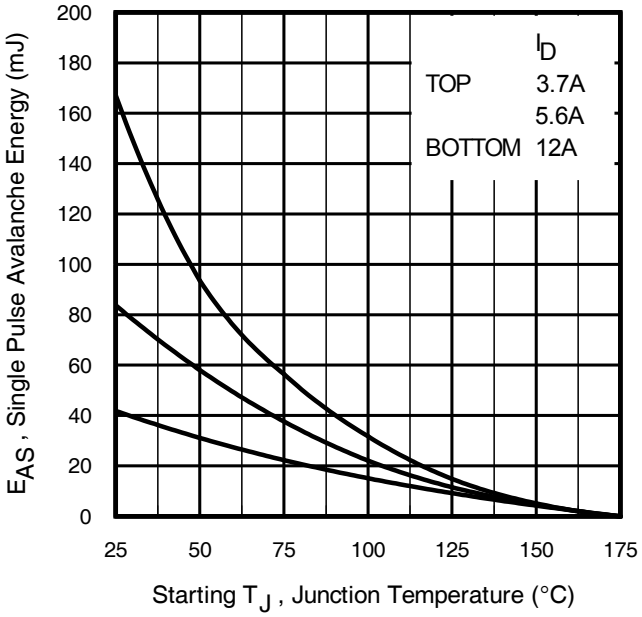

Fig 12c. Maximum Avalanche Energy vs. Drain Current

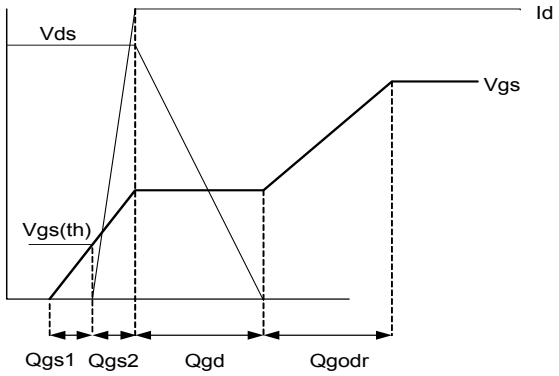

Fig 13a. Gate Charge Waveform

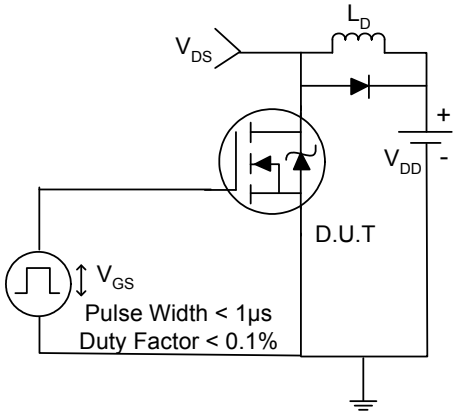

Fig 14a. Switching Time Test Circuit

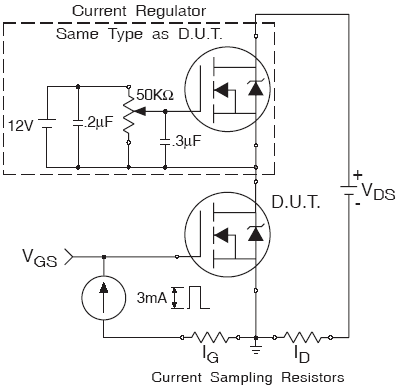

Fig 13b. Gate Charge Test Circuit

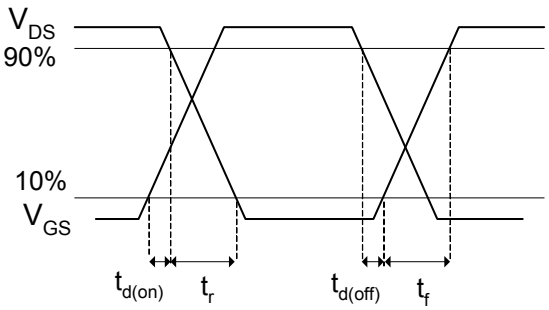

Fig 14b. Switching Time Waveforms

Peak Diode Recovery dv/dt Test Circuit

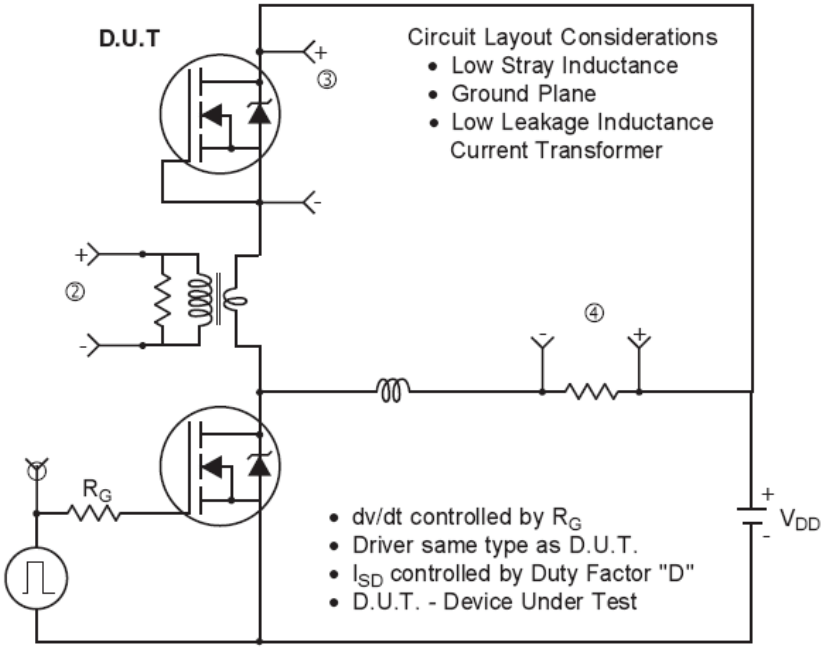

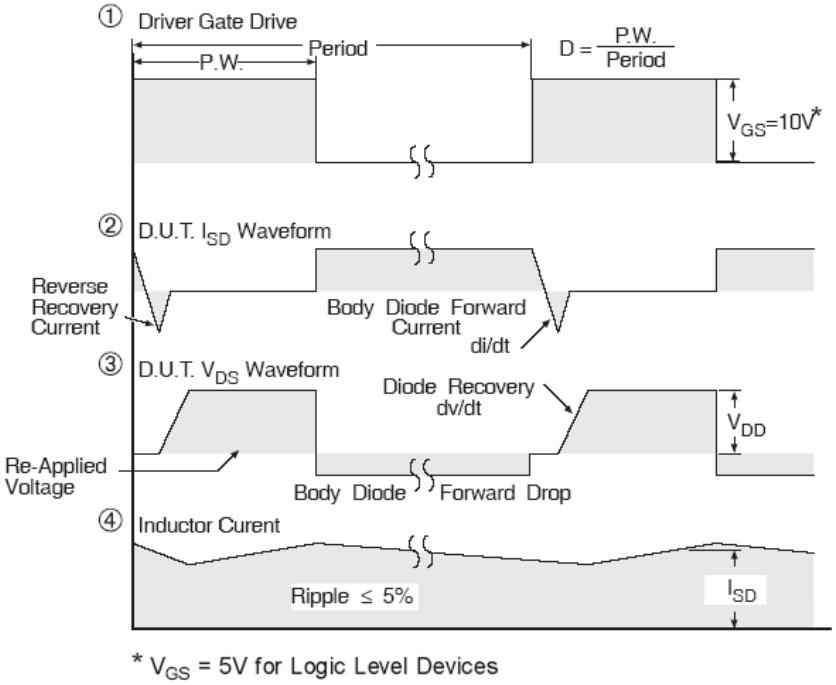

Fig 15. Peak Diode Recovery dv/dt Test Circuit for N-Channel HEXFET® Power MOSFETs

Power MOSFET Selection for Non-Isolated DC/DC Converters

Control FET

Special attention has been given to the power losses in the switching elements of the circuit - Q1 and Q2. Power losses in the high side switch Q1, also called the Control FET, are impacted by the $R_{ds(on)}$ of the MOSFET, but these conduction losses are only about one half of the total losses.

Power losses in the control switch Q1 are given by;

$$P_{loss} = P_{conduction} + P_{switching} + P_{drive} + P_{output}$$

This can be expanded and approximated by;

$$P_{loss} = \left(I_{rms}^{2} \times R_{ds(on)}\right) + \left(I \times \frac{Q_{gd}}{i_g} \times V_{in} \times f\right) + \left(I \times \frac{Q_{gs2}}{i_g} \times V_{in} \times f\right) + \left(Q_g \times V_g \times f\right) + \left(\frac{Q_{oss}}{2} \times V_{in} \times f\right)$$

This simplified loss equation includes the terms Q_{gs2} and Q_{oss} which are new to Power MOSFET data sheets.
Q_{gs2} is a subelement of traditional gate-source charge that is included in all MOSFET data sheets. The importance of splitting this gate-source charge into two sub elements, Q_{gs1} and Q_{gs2}, can be seen from Fig 16.
Q_{gs2} indicates the charge that must be supplied by the gate driver between the time that the threshold voltage has been reached and the time the drain current rises to Id max at which time the drain voltage begins to change. Minimizing Q_{gs2} is a critical factor in reducing switching losses in Q1.
Q_{oss} is the charge that must be supplied to the output capacitance of the MOSFET during every switching cycle. Figure A shows how Q_{oss} is formed by the parallel combination of the voltage dependent (non-linear) capacitance's C_{ds} and C_{dg} when multiplied by the power supply input buss voltage.

Synchronous FET

The power loss equation for Q2 is approximated by;

$$P_{loss} = P_{conduction} + P_{drive} + P_{output}^{*}$$

$$P_{loss} = \left(I_{rms}^{2} \times R_{ds(on)}\right) + \left(Q_g \times V_g \times f\right) + \left(\frac{Q_{oss}}{2} \times V_{in} \times f\right) + \left(Q_{rr} \times V_{in} \times f\right)$$

*dissipated primarily in Q1

For the synchronous MOSFET Q2, $R_{ds(on)}$ is an important characteristic; however, once again the importance of gate charge must not be overlooked since it impacts three critical areas. Under light load the MOSFET must still be turned on and off by the control I_C so the gate drive losses become much more significant. Secondly, the output charge Q_{oss} and reverse recovery charge Q_{rr} both generate losses that are transferred to Q1 and increase the dissipation in that device. Thirdly, gate charge will impact the MOSFETs' susceptibility to $C_{dv/dt}$ turn on.
The drain of Q2 is connected to the switching node of the converter and therefore sees transitions between ground and Vin. As Q1 turns on and off there is a rate of change of drain voltage dV/dt which is capacitive coupled to the gate of Q2 and can induce a voltage spike on the gate that is sufficient to turn the MOSFET on, resulting in shoot-through current . The ratio of Q_{gd}/Q_{gs1} must be minimized to reduce the potential for $C_{dv/dt}$ turn on.

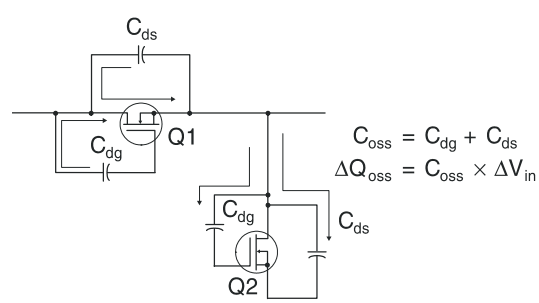

Figure A: Q_{oss} Characteristic

D-Pak (TO-252AA) Package Outline (Dimensions are shown in millimeters (inches))

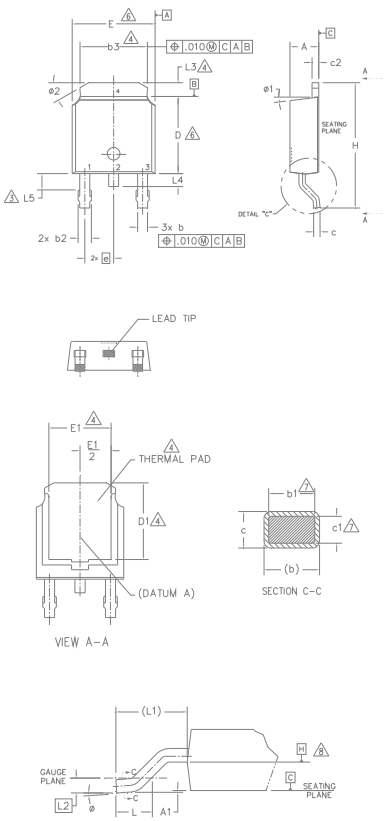

NOTES:

1.– DIMENSIONING AND TOLERANCING PER ASME Y14.5M–1994

2.– DIMENSION ARE SHOWN IN INCHES [MILLIMETERS].

3.– LEAD DIMENSION UNCONTROLLED IN L5.

4.– DIMENSION D1, E1, L3 & b3 ESTABLISH A MINIMUM MOUNTING SURFACE FOR THERMAL PAD.

5.– SECTION C–C DIMENSIONS APPLY TO THE FLAT SECTION OF THE LEAD BETWEEN .005 AND 0.10 [0.13 AND 0.25] FROM THE LEAD TIP.

6.– DIMENSION D & E DO NOT INCLUDE MOLD FLASH. MOLD FLASH SHALL NOT EXCEED .006 [0.15] PER SIDE. THESE DIMENSIONS ARE MEASURED AT THE OUTMOST EXTREMES OF THE PLASTIC BODY.

7.– DIMENSION b1 & c1 APPLIED TO BASE METAL ONLY.

8.– DATUM A & B TO BE DETERMINED AT DATUM PLANE H.

9.– OUTLINE CONFORMS TO JEDEC OUTLINE TO–252AA.

SYMBOL	DIMENSIONS				NOTES
	MILLIMETERS		INCHES		
	MIN.	MAX.	MIN.	MAX.	
A	2.18	2.39	.086	.094	
A1	–	0.13	–	.005	
b	0.64	0.89	.025	.035	
b1	0.64	0.79	.025	.031	7
b2	0.76	1.14	.030	.045	
b3	4.95	5.46	.195	.215	4
c	0.46	0.61	.018	.024	
c1	0.41	0.56	.016	.022	7
c2	0.46	0.89	.018	.035	
D	5.97	6.22	.235	.245	6
D1	5.21	–	.205	–	4
E	6.35	6.73	.250	.265	6
E1	4.32	–	.170	–	4
e	2.29 BSC		.090 BSC		
H	9.40	10.41	.370	.410	
L	1.40	1.78	.055	.070	
L1	2.74 BSC		.108 REF.		
L2	0.51 BSC		.020 BSC		
L3	0.89	1.27	.035	.050	4
L4	–	1.02	–	.040	
L5	1.14	1.52	.045	.060	3
ø	0°	10°	0°	10°	
ø1	0°	15°	0°	15°	
ø2	25°	35°	25°	35°	

LEAD ASSIGNMENTS

HEXFET

1.– GATE
2.– DRAIN
3.– SOURCE
4.– DRAIN

IGBT & CoPAK

1.– GATE
2.– COLLECTOR
3.– EMITTER
4.– COLLECTOR

D-Pak (TO-252AA) Part Marking Information

EXAMPLE: THIS IS AN IRFR120
WITH ASSEMBLY
LOT CODE 1234
ASSEMBLED ON WW 16, 2001
IN THE ASSEMBLY LINE "A"

Note: "P" in assembly line position indicates "Lead-Free"

"$\overline{P}$" in assembly line position indicates "Lead-Free" qualification to the consumer-level

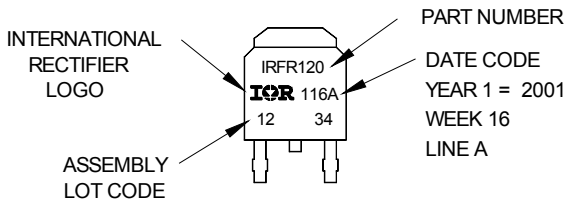

OR

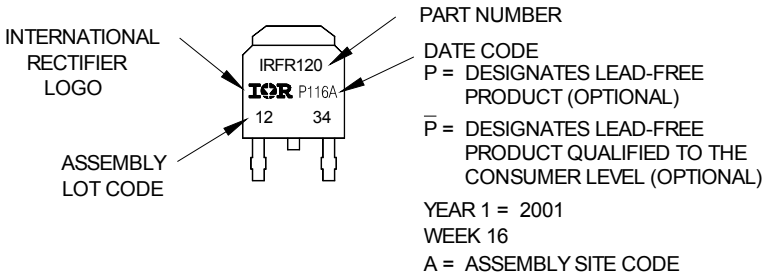

Note: For the most current drawing please refer to Infineon's web site www.infineon.com

I-Pak (TO-251AA) Package Outline Dimensions are shown in millimeters (inches)

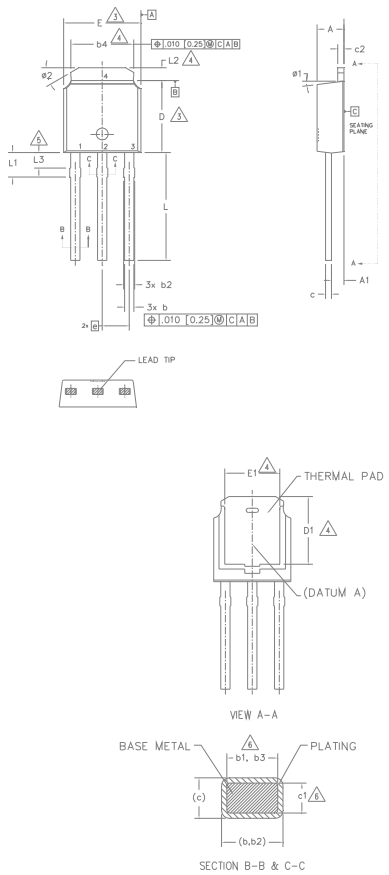

NOTES:

1.– DIMENSIONING AND TOLERANCING PER ASME Y14.5M–1994

2.– DIMENSION ARE SHOWN IN INCHES [MILLIMETERS].

3.– DIMENSION D & E DO NOT INCLUDE MOLD FLASH. MOLD FLASH SHALL NOT EXCEED .005 [0.13] PER SIDE. THESE DIMENSIONS ARE MEASURED AT THE OUTMOST EXTREMES OF THE PLASTIC BODY.

4.– THERMAL PAD CONTOUR OPTION WITHIN DIMENSION b4, L2, E1 & D1.

5.– LEAD DIMENSION UNCONTROLLED IN L3.

6.– DIMENSION b1, b3 & c1 APPLY TO BASE METAL ONLY.

7.– OUTLINE CONFORMS TO JEDEC OUTLINE TO–251AA (Date 06/02).

8.– CONTROLLING DIMENSION : INCHES.

SYMBOL	DIMENSIONS				NOTES
	MILLIMETERS		INCHES		
	MIN.	MAX.	MIN.	MAX.	
A	2.18	2.39	.086	.094	
A1	0.89	1.14	.035	.045	
b	0.64	0.89	.025	.035	
b1	0.65	0.79	.025	.031	6
b2	0.76	1.14	.030	.045	
b3	0.76	1.04	.030	.041	6
b4	4.95	5.46	.195	.215	4
c	0.46	0.61	.018	.024	
c1	0.41	0.56	.016	.022	6
c2	0.46	0.89	.018	.035	
D	5.97	6.22	.235	.245	3
D1	5.21	–	.205	–	4
E	6.35	6.73	.250	.265	3
E1	4.32	–	.170	–	4
e	2.29 BSC		.090 BSC		
L	8.89	9.65	.350	.380	
L1	1.91	2.29	.045	.090	
L2	0.89	1.27	.035	.050	4
L3	0.89	1.52	.035	.060	5
ø1	0°	15°	0°	15°	
ø2	25°	35°	25°	35°	

LEAD ASSIGNMENTS

HEXFET

1.– GATE
2.– DRAIN
3.– SOURCE
4.– DRAIN

I-Pak (TO-251AA) Part Marking Information

EXAMPLE: THIS IS AN IRFU120
WITH ASSEMBLY
LOT CODE 5678
ASSEMBLED ON WW 19, 2001
IN THE ASSEMBLY LINE "A"

Note: "P" in assembly line position indicates Lead-Free"

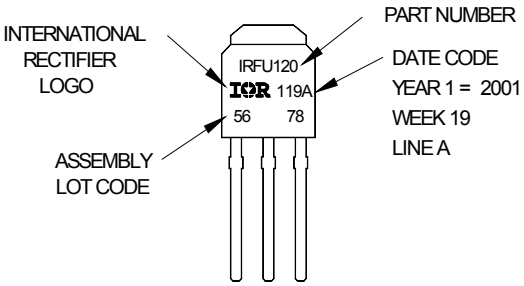

OR

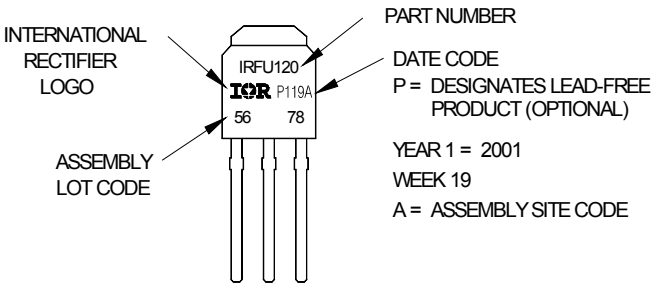

Note: For the most current drawing please refer to Infineon's web site www.infineon.com

D-Pak (TO-252AA) Tape & Reel Information Dimensions are shown in millimeters (inches)

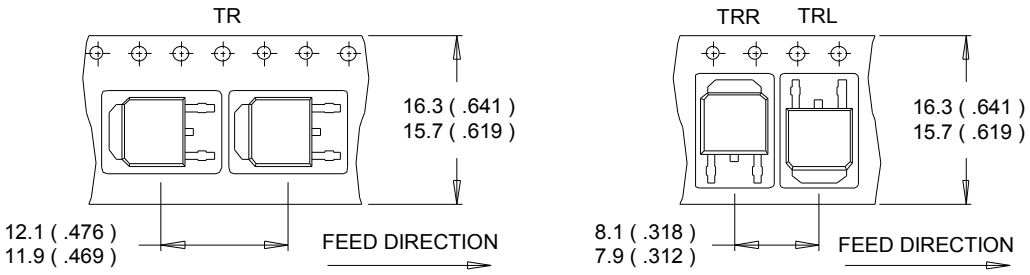

NOTES :
1. CONTROLLING DIMENSION : MILLIMETER.
2. ALL DIMENSIONS ARE SHOWN IN MILLIMETERS (INCHES).
3. OUTLINE CONFORMS TO EIA-481 & EIA-541.

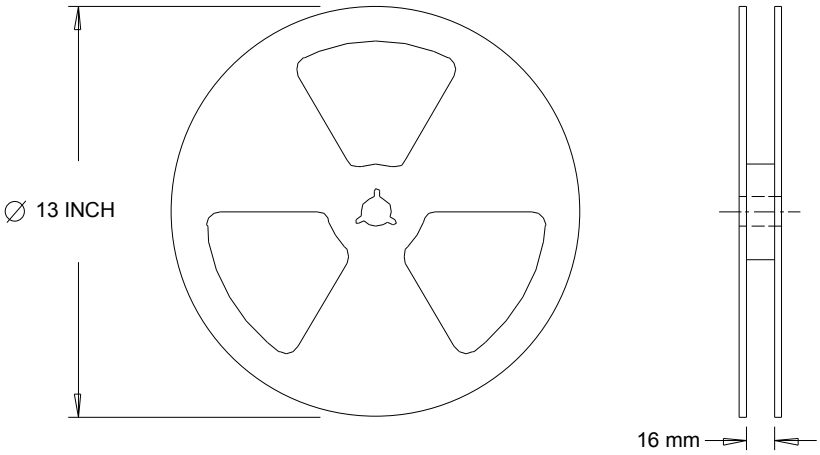

NOTES :
1. OUTLINE CONFORMS TO EIA-481.

Note: For the most current drawing please refer to Infineon's web site www.infineon.com

Qualification Information†

Qualification Level	Industrial (per JEDEC JESD47F) ††	
Moisture Sensitivity Level	D-Pak	MSL1 (per JEDEC J-STD-020D) ††
	I-Pak	
RoHS Compliant	Yes	

† Qualification standards can be found at Infineon's web site www.infineon.com

†† Applicable version of JEDEC standard at the time of product release.

Revision History

Date	Comments
5/31/2016	• Updated datasheet with corporate template. • Added disclaimer on last page.

Trademarks of Infineon Technologies AG
µHVIC™, µIPM™, µPFC™, AU-ConvertIR™, AURIX™, C166™, CanPAK™, CIPOS™, CIPURSE™, CoolDP™, CoolGaN™, COOLiR™, CoolMOS™, CoolSET™, CoolSiC™, DAVE™, DI-POL™, DirectFET™, DrBlade™, EasyPIM™, EconoBRIDGE™, EconoDUAL™, EconoPACK™, EconoPIM™, EiceDRIVER™, eupec™, FCOS™, GaNpowIR™, HEXFET™, HITFET™, HybridPACK™, iMOTION™, IRAM™, ISOFACE™, IsoPACK™, LEDrivIR™, LITIX™, MIPAQ™, ModSTACK™, my-d™, NovalithIC™, OPTIGA™, OptiMOS™, ORIGA™, PowIRaudio™, PowIRStage™, PrimePACK™, PrimeSTACK™, PROFET™, PRO-SIL™, RASIC™, REAL3™, SmartLEWIS™, SOLID FLASH™, SPOC™, StrongIRFET™, SupIRBuck™, TEMPFET™, TRENCHSTOP™, TriCore™, UHVIC™, XHP™, XMC™

Trademarks updated November 2015

Other Trademarks
All referenced product or service names and trademarks are the property of their respective owners.

Edition 2016-04-19

Published by

Infineon Technologies AG

81726 Munich, Germany

© 2016 Infineon Technologies AG.
All Rights Reserved.

Do you have a question about this document?
Email: erratum@infineon.com

Document reference

ifx1

IMPORTANT NOTICE
The information given in this document shall in no event be regarded as a guarantee of conditions or **characteristics ("Beschaffenheitsgarantie") .**

With respect to any examples, hints or any typical values stated herein and/or any information regarding the application of the product, Infineon Technologies hereby disclaims any and all warranties and liabilities of any kind, including without limitation warranties of non-infringement of intellectual property rights of any third party.

In addition, any information given in this document **is subject to customer's compliance with its** obligations stated in this document and any applicable legal requirements, norms and standards concerning customer's products and any use of the product of Infineon Technologies in **customer's applications.**

The data contained in this document is exclusively intended for technically trained staff. It is the **responsibility of customer's technical departments** to evaluate the suitability of the product for the intended application and the completeness of the product information given in this document with respect to such application.

For further information on the product, technology, delivery terms and conditions and prices please contact your nearest Infineon Technologies office (www.infineon.com).

Please note that this product is not qualified according to the AEC Q100 or AEC Q101 documents of the Automotive Electronics Council.

WARNINGS
Due to technical requirements products may contain dangerous substances. For information on the types in question please contact your nearest Infineon Technologies office.

Except as otherwise explicitly approved by Infineon Technologies in a written document signed by authorized representatives of Infineon Technologies, **Infineon Technologies' products may** not be used in any applications where a failure of the product or any consequences of the use thereof can reasonably be expected to result in personal injury.