SPEC

Spec No.	TQ3C 8EAC0 E1DDV73 00
Date	March 14, 2008

TYPE : KCG057QVLDJ-G000

< 5.7 inch QVGA transmissive color STN
with LED backlight and touch panel >

CONTENTS

1. Application
2. Construction and outline
3. Mechanical specifications
4. Absolute maximum ratings
5. Electrical characteristics
6. Optical characteristics
7. Circuit block diagram
8. Interface signals
9. Interface timing chart
10. Data and screen
11. Input timing characteristics
12. Supply voltage sequence condition
13. Backlight characteristics
14. Design guidance for analog touch panel (T/P)
15. Lot number identification
16. Warranty
17. Precautions for use
18. Reliability test data
19. Outline drawing

Issued
Date: Mar.27,2008
KYOCERA
Hayato LCD Division

KYOCERA CORPORATION
KAGOSHIMA HAYATO PLANT
LCD DIVISION

This specification is subject to change without notice.
Consult Kyocera before ordering.

Original Issue Date	Designed by: Engineering dept.			Confirmed by: QA dept.	
	Prepared	Checked	Approved	Checked	Approved
March 14, 2008	D. Ajisaka	M. Tokumori	Y. Matsumoto	S. Higashi	

Warning

1. This Kyocera LCD module has been specifically designed for use only in electronic devices and industrial machines in the area of audio control, office automation, industrial control home appliances, etc. The module should not be used in applications where the highest level of safety and reliability are required and module failure or malfunction of such module results in physical harm or loss of life, as well as enormous damage or loss. Such fields of applications include, without limitation, medical, aerospace, communications infrastructure, atomic energy control. Kyocera expressly disclaims any and all liability resulting in any way to the use of the module in such applications.

2. Customer agrees to indemnity, defend and hold Kyocera harmless from and against any and all actions, claims, damages, liabilities, awards, costs, and expenses, including legal expenses, resulting from or arising out of Customer's use, or sale for use, or Kyocera modules in applications.

Caution

1. Kyocera shall have the right, which Customer hereby acknowledges, to immediately scrap or destroy tooling for Kyocera modules for which no purchase Orders have been received from the Customer in a two-year period.

Revision record

Date	Designed by : Engineering dept.			Confirmed by : QA dept.	
	Prepared	Checked	Approved	Checked	Approved

Rev.No.	Date	Page	Descriptions

1. Application

This document defines the specification of KCG057QVLDJ-G000. (RoHS Compliant)

2. Construction and outline

LCD	: Transmissive color dot matrix type STN
Duty ratio	: 1/240 duty
Backlight system	: LED
Polarizer	: Glare treatment
Additional circuit	: Bias voltage circuit, Randomizing circuit, DC/DC converter circuit, Temperature compensation circuit
Touch panel	: Analog type, Non-Glare treatment

3. Mechanical specifications

3-1. Mechanical specifications of LCD

Item	Specification	Unit
Outline dimensions	144 (W)× (104.8) (H) × 14.5 (D)	mm
Active area	115.18 (W) × 86.38 (H) (14.4cm / 5.7 inch (Diagonal))	mm
Effective viewing area	117.2 (W) × 88.4 (H)	mm
Dot format	320×(R,G,B) (W) × 240 (H)	dot
Dot size	0.10 (W) × 0.34 (H)	mm
Dot pitch	0.12 (W) × 0.36 (H)	mm
Base color *1	Normally Black	-
Mass	220	g

*1 Due to the characteristics of the LCD material, the color varies with environmental temperature.

3-2. Mechanical specifications of touch panel

Item	Specification	Unit
Input	Radius-0.8 stylus or Finger	-
Actuation force	0.5±0.3	N
Transmittance	Typ. 80	%
Surface hardness	Pencil hardness 2H or more according	-

4. Absolute maximum ratings

4-1. Electrical absolute maximum ratings

Item	Symbol	Min.	Max.	Unit
Supply voltage for logic	V_{DD}	0	6.0	V
Supply voltage for LCD driving	V_{CONT}	0	V_{DD}	V
Input signal voltage *1	V_{IN}	0	V_{DD}	V
FRM frequency	f_{FRM}	-	150	Hz
LED forward current *2	IF	-	27	mA
Reversed voltage *2	VR	-	5	V
Supply voltage for touch panel	V_{TP}	0	6.0	V
Input current of touch panel	I_{TP}	0	0.5	mA

*1 Input signal : FRM, LOAD, CP, DISP, D0～D7
*2 For each “AN1-CA1”, “AN2-CA2” and “AN3-CA3”

4-2. Environmental absolute maximum ratings

Item	Symbol	Min.	Max.	Unit
Operating temperature *1	T_{OP}	0	60	°C
Storage temperature *2	T_{STO}	-20	60	°C
Operating humidity *3	H_{OP}	10	*4	%RH
Storage humidity *3	H_{STO}	10	*4	%RH
Vibration	-	*5	*5	-
Shock	-	*6	*6	-

*1 Operating temperature means a temperature which operation shall be guaranteed. Since display performance is evaluated at 25°C, another temperature range should be confirmed.
*2 Temp. = -20°C＜48h, Temp. = 60°C＜168h
Store LCD panels at normal temperature/humidity. Keep them free from vibration and shock. An LCD panel that is kept at a low or a high temperature for a long time can be defective due to other conditions, even if the low or high temperature satisfies the standard.
(Please refer to “Precautions for use” for details.)
*3 Non-condensing
*4 Temp.≦40°C, 85%RH Max.
Temp.＞40°C, Absolute humidity shall be less than 85%RH at 40°C.
*5

Frequency	10～55 Hz	Acceleration value (0.3～9 m/s²)
Vibration width	0.15mm	
Interval	10-55-10 Hz 1 minutes	

2 hours in each direction X, Y, Z (6 hours total)
EIAJ ED-2531
*6 Acceleration: 490 m/s², Pulse width: 11 ms
3 times in each direction: ±X, ±Y, ±Z
EIAJ ED-2531

5. Electrical characteristics

5-1. V_{DD} = 5.0V

V_{DD} = +5.0V±5%, Temp. = 0～60°C

Item	Symbol	Condition	Min.	Typ.	Max.	Unit
Supply voltage for logic	V_{DD}	-	4.75	5.00	5.25	V
Supply voltage for LCD driving *1, *2	V_{CONT}= V_{OP}	0～50°C *3	1.30	1.80	2.30	V
		～60°C	-	-	2.40	V
Input signal voltage (FRM,LOAD,CP,DISP,D0～D7)	V_{IN}	"High" level	0.8V_{DD}	-	V_{DD}	V
		"Low" level	0	-	0.2V_{DD}	V
Input current	I_{IN}	Input signal	-100	-	100	μA
Rush current for logic	I_{RUSH}	When LCD turn on.	3.0A (Peak) × 1ms			
Clock frequency	f_{CP}	-	-	-	10.00	MHz
Frame frequency *4	f_{FRM}	-	70	75	80	Hz
Current consumption for logic	I_{DD}	*5	-	27	41	mA
Power consumption	P_{DISP}		-	135	203	mW

*1 Maximum contrast ratio is obtained by adjusting the LCD supply voltage (V_{CONT} = V_{OP}) for driving the LCD.

*2 Frame frequency : f_{FRM} = 75Hz

*3 The LCD module has a temperature compensation circuit.

*4 In consideration of display quality, it is recommended that frame frequency be set in the range of 70-80Hz. When you have to use higher frame and clock frequencies, confirm the LCD's performance and quality prior to finalizing the frequency value. Generally, as frame and clock frequencies become higher current consumption increases and display quality will degrade.

*5 Display pattern:

V_{DD} = 5.0V, V_{CONT} = V_{OP}, f_{FRM} = 75Hz, f_{CP} = 2.16MHz, Temp. = 25°C

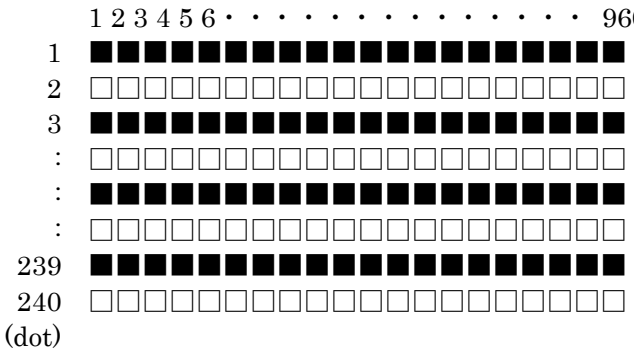

5-2. V_{DD} = 3.3V

V_{DD} =+3.3V±0.3V, Temp. = 0～60°C

Item	Symbol	Condition	Min.	Typ.	Max.	Unit
Supply voltage for logic	V_{DD}	-	3.0	3.3	3.6	V
Supply voltage for LCD driving *1, *2	V_{CONT}= V_{OP}	0～50°C *3	1.30	1.80	2.30	V
		～60°C	-	-	2.40	V
Input signal voltage (FRM,LOAD,CP,DISP,D0-D7)	V_{IN}	"High" level	0.8V_{DD}	-	V_{DD}	V
		"Low" level	0	-	0.2V_{DD}	V
Input current	I_{IN}	Input signal	-100	-	100	μA
Rush current for logic	I_{RUSH}	When LCD turn on.	3.0A (Peak) × 1ms			
Clock frequency	f_{CP}	-	-	-	10.00	MHz
Frame frequency *4	f_{FRM}	-	70	75	80	Hz
Current consumption for logic	I_{DD}	*5	-	41	61	mA
Power consumption	P_{DISP}		-	134	201	mW

*1 Maximum contrast ratio is obtained by adjusting the LCD supply voltage (V_{CONT}=V_{OP}) for driving the LCD.

*2 Frame frequency : f_{FRM} = 75Hz

*3 The LCD module has a temperature compensation circuit.

*4 In consideration of display quality, it is recommended that frame frequency be set in the range of 70-80Hz. When you have to use higher frame and clock frequencies, confirm the LCD's performance and quality prior to finalizing the frequency value. Generally, as frame and clock frequencies become higher current consumption increases and display quality will degrade.

*5 Display pattern:

V_{DD} = 3.3V, V_{CONT} = V_{OP}, f_{FRM} = 75Hz, f_{CP} = 2.16MHz, Temp. = 25°C

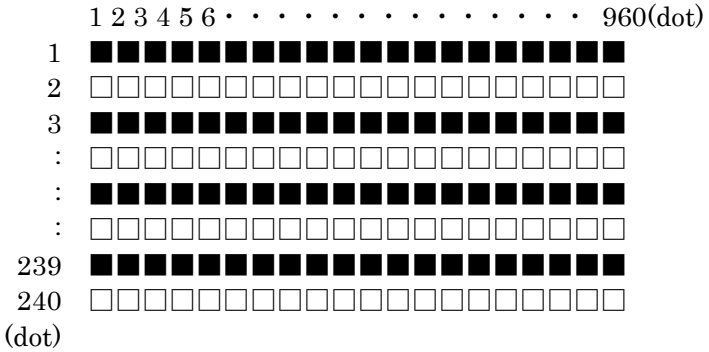

5-3. Touch panel

Item	Specification
Supply voltage for touch panel	5.0V
Terminal resistance	xL～xR : 200Ω～1,000Ω
	yU～yL : 200Ω～1,000Ω
Linearity	less than ±1.5%
Insulation resistance	100MΩ or more at DC25V

6. Optical characteristics

Measuring spot =φ6.0mm, Temp. = 25°C

Item		Symbol	Condition	Min.	Typ.	Max.	Unit
Response time	Rise	τ_r	θ=φ=0°	-	180	280	ms
	Down	τ_d	θ=φ=0°	-	170	270	ms
Viewing angle range		θ_{UPPER}	CR≧2	-	20	-	deg.
		θ_{LOWER}		-	35	-	
		ϕ_{LEFT}		-	50	-	deg.
		ϕ_{RIGHT}		-	50	-	
Contrast ratio		CR	θ=φ=0°	30	55	-	-
Brightness		L	IF=25mA/Line	195	280	-	cd/m²
Chromaticity coordinates	Red	x	θ=φ=0°	0.47	0.52	0.57	-
		y		0.32	0.37	0.42	
	Green	x	θ=φ=0°	0.27	0.32	0.37	
		y		0.51	0.56	0.61	
	Blue	x	θ=φ=0°	0.10	0.15	0.20	
		y		0.11	0.16	0.21	
	White	x	θ=φ=0°	0.26	0.31	0.36	
		y		0.31	0.36	0.41	

Optimum contrast is obtained by adjusting the LCD driving voltage (V_{OP}) while at the viewing angle of θ=φ=0°.

6-1. Definition of contrast ratio

$$\text{CR(Contrast ratio)} = \frac{\text{Brightness with all pixels "White"}}{\text{Brightness with all pixels "Black"}}$$

6-2. Definition of V_{OP}

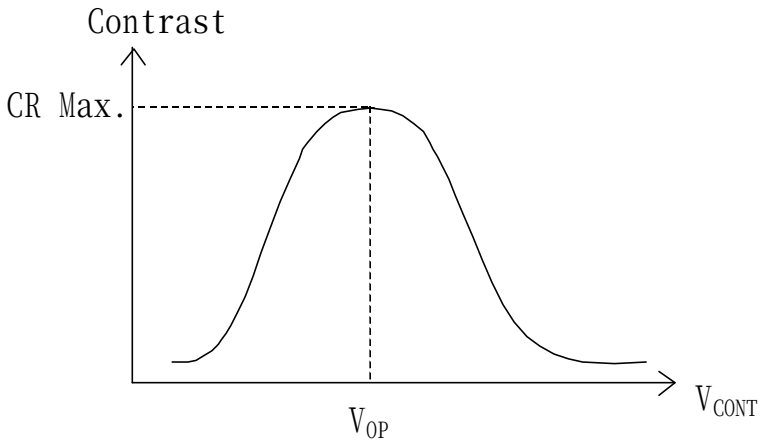

6-3. Definition of response time

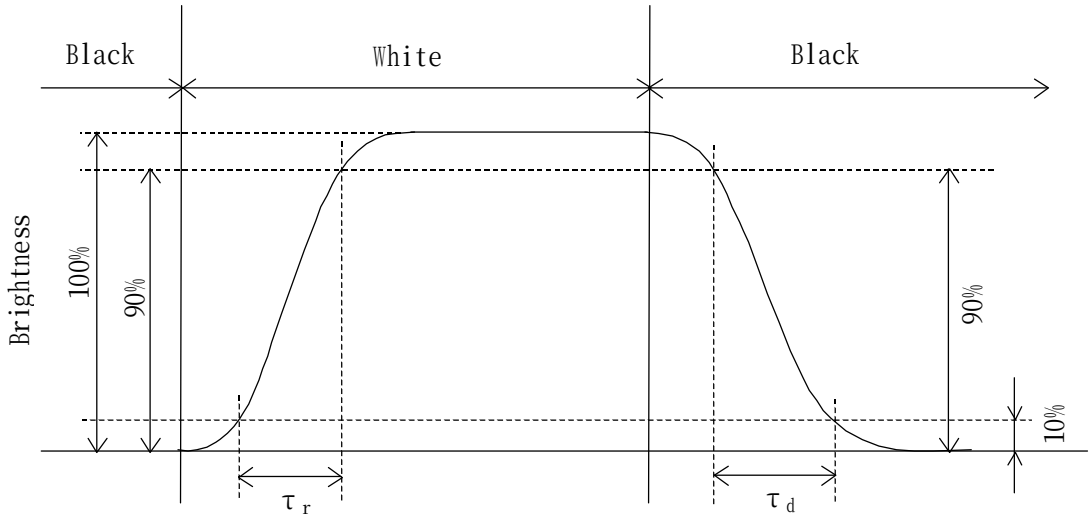

6-4. Definition of viewing angle

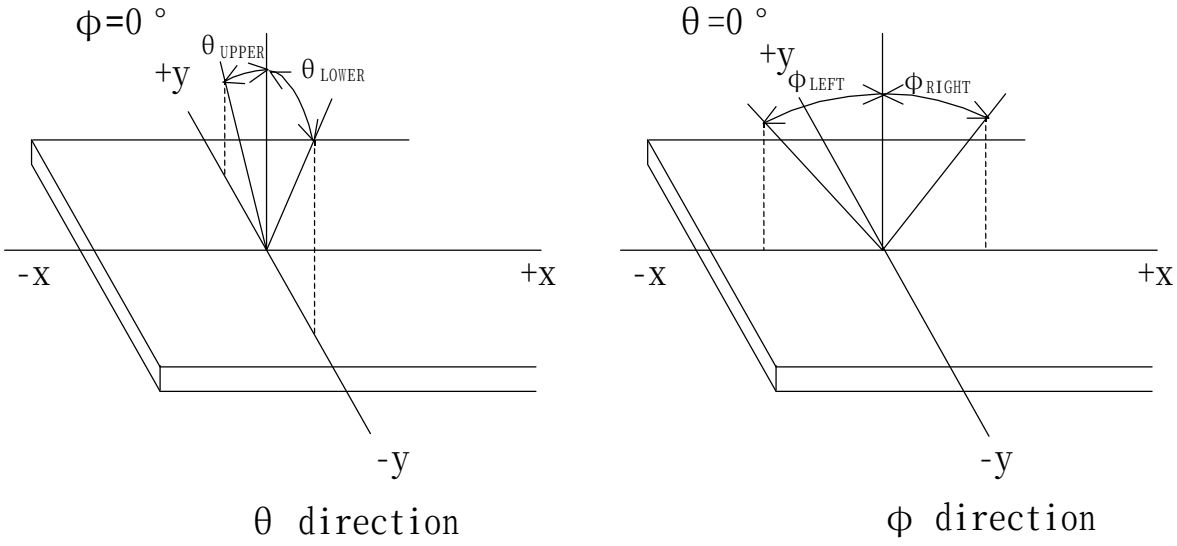

6-5. Brightness measuring points

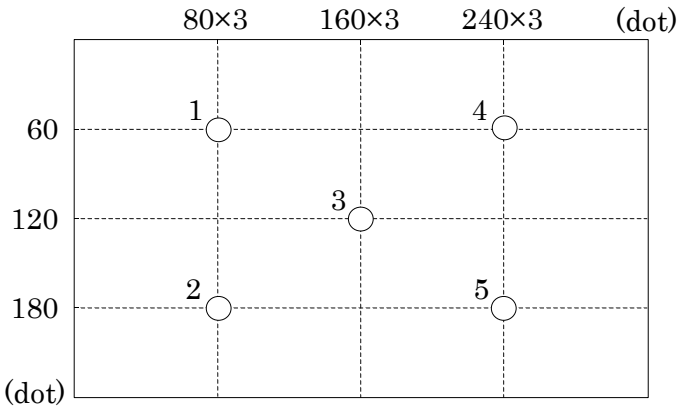

1) Rating is defined on the average in the viewing area.
2) Measured 30 minutes after the LED is powered on. (Ambient temp. = 25°C)
3) Backlight : IF=25mA / 1 LED line

7. Circuit block diagram

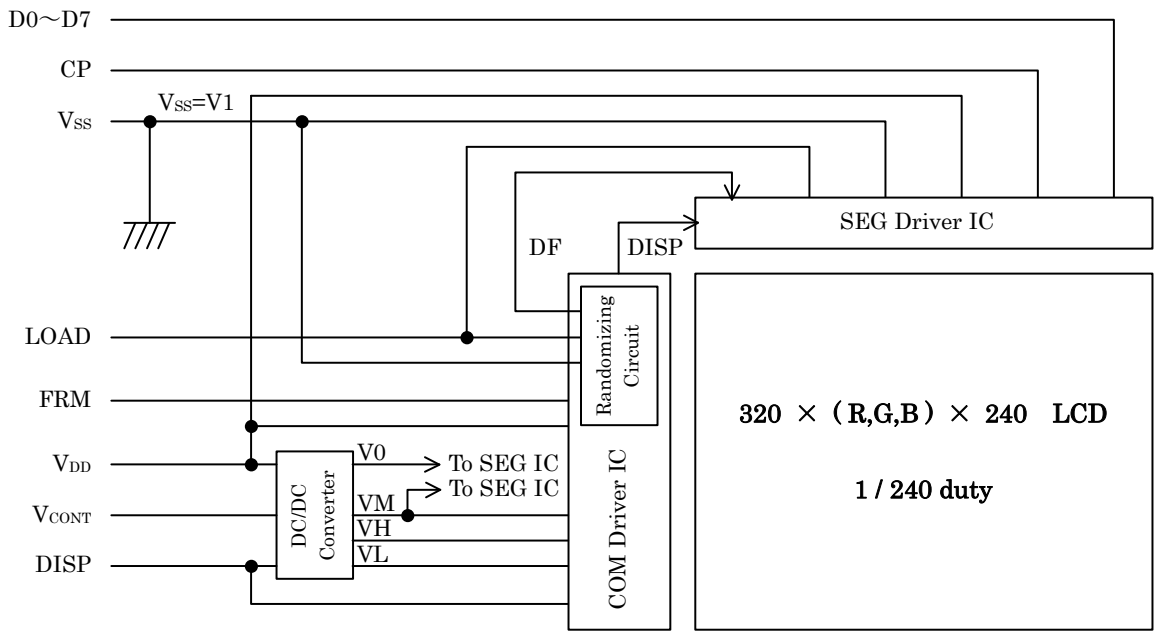

7-1. Power supply

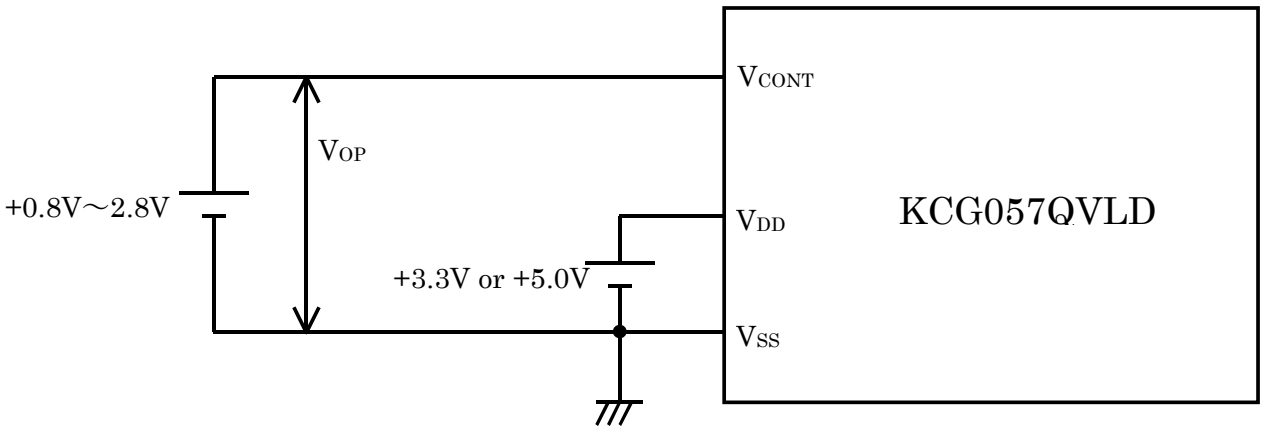

8. Interface signals

8-1. Pin assignment of LCD panel

No.	Symbol	Description	Level
1	FRM	Synchronous signal for driving scanning line	H
2	LOAD	Data signal latch clock	H → L
3	CP	Data signal shift clock	H → L
4	DISP	Display control signal	H(ON),L(OFF)
5	V_{DD}	Power supply for logic	-
6	V_{SS}	GND	-
7	V_{CONT}	LCD adjust voltage	-
8	D7	Display data	H(ON),L(OFF)
9	D6		
10	D5		
11	D4		
12	D3		
13	D2		
14	D1		
15	D0		
16	V_{DD}	Power supply for logic	-
17	V_{DD}		
18	V_{SS}	GND	-
19	V_{SS}		
20	V_{SS}		

LCD connector : 08-6210-020-340-800+ (ELCO)
Recommended matching FFC or FPC : 0.5mm pitch

8-2. Pin assignment of LED

No.	Symbol	Description
1	AN1	Anode 1
2	AN2	Anode 2
3	AN3	Anode 3
4	CA1	Cathode 1
5	CA2	Cathode 2
6	CA3	Cathode 3

LCD side connector : SHLP-06V-S-B (JST)
Recommended matching connector
: SM06B-SHLS-TF (JST)
: SM06B-SHLS-TF(LF)(SN) (JST)・・・(RoHS Compliant)

8-3. Pin assignment of touch panel

No.	Symbol	Description
1	yU	y-Upper terminal
2	xL.	x-Left terminal
3	yL	y-Lower terminal
4	xR	x-Right terminal

Touch panel side connector : 1.25mm pitch
Recommended matching connector : Series FE,FFS (JST)
: KCA-K4R (DMC)

9. Interface timing chart

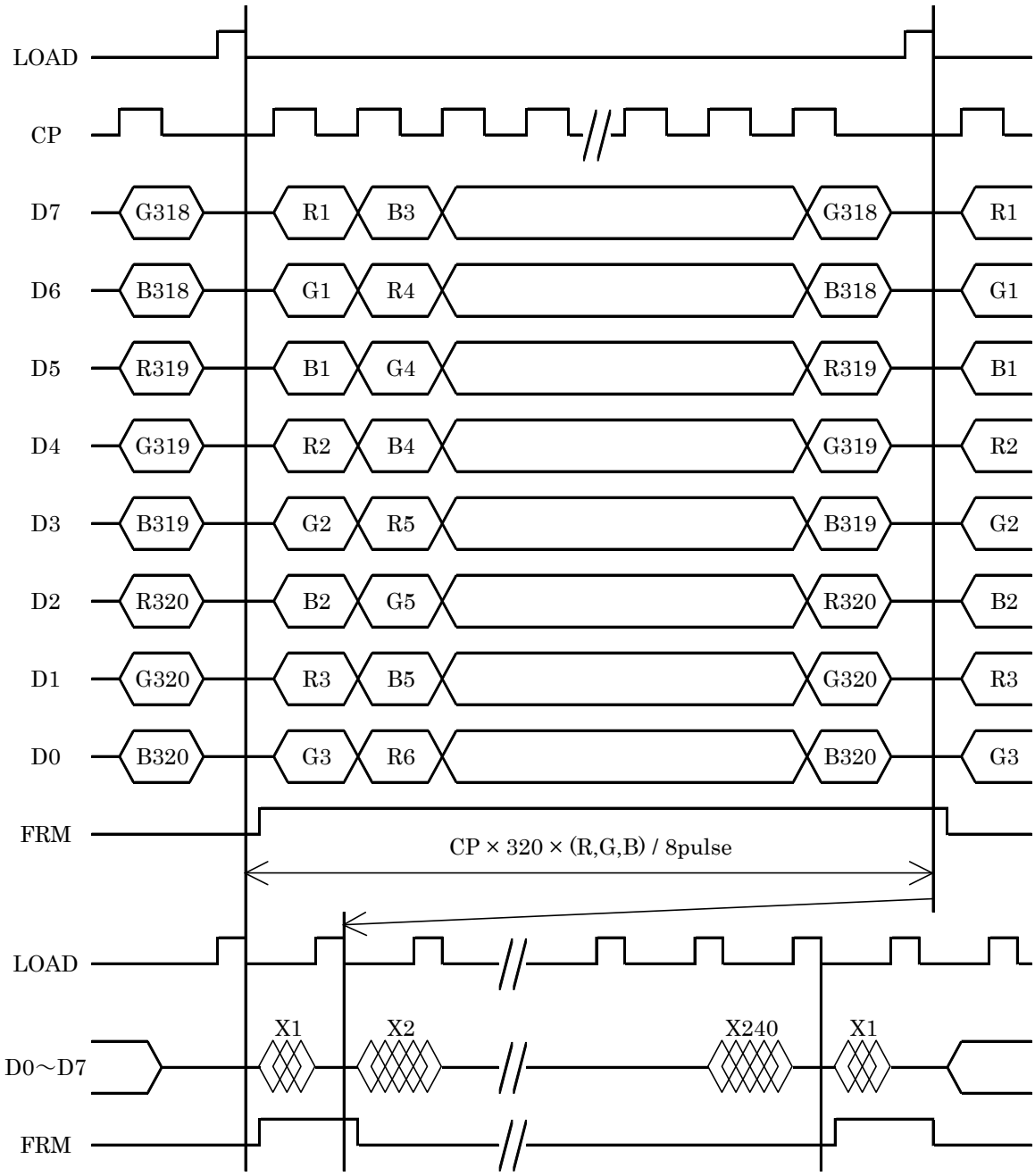

* The cycle of the LOAD signal should be stable and continuously applied without interruption.
* The above-mentioned timing chart is a reference to set up a LCD module, not an electrical rating.

10. Data and screen

	Y1			Y2			Y3			···	Y320		
X1	D7 R1	D6 G1	D5 B1	D4 R2	D3 G2	D2 B2	D1 R3	D0 G3	D7 B3	···	D2 R320	D1 G320	D0 B320
X240													

11. Input timing characteristics

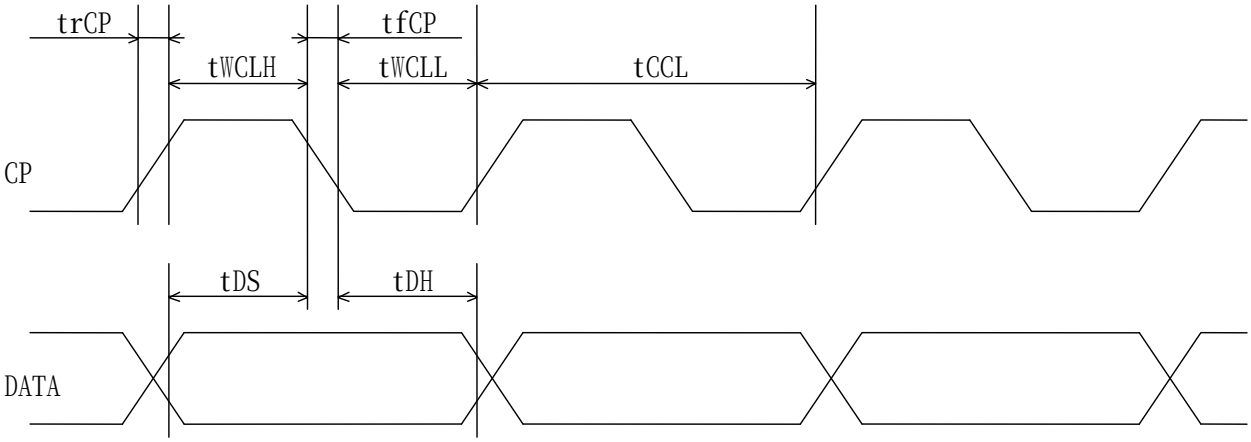

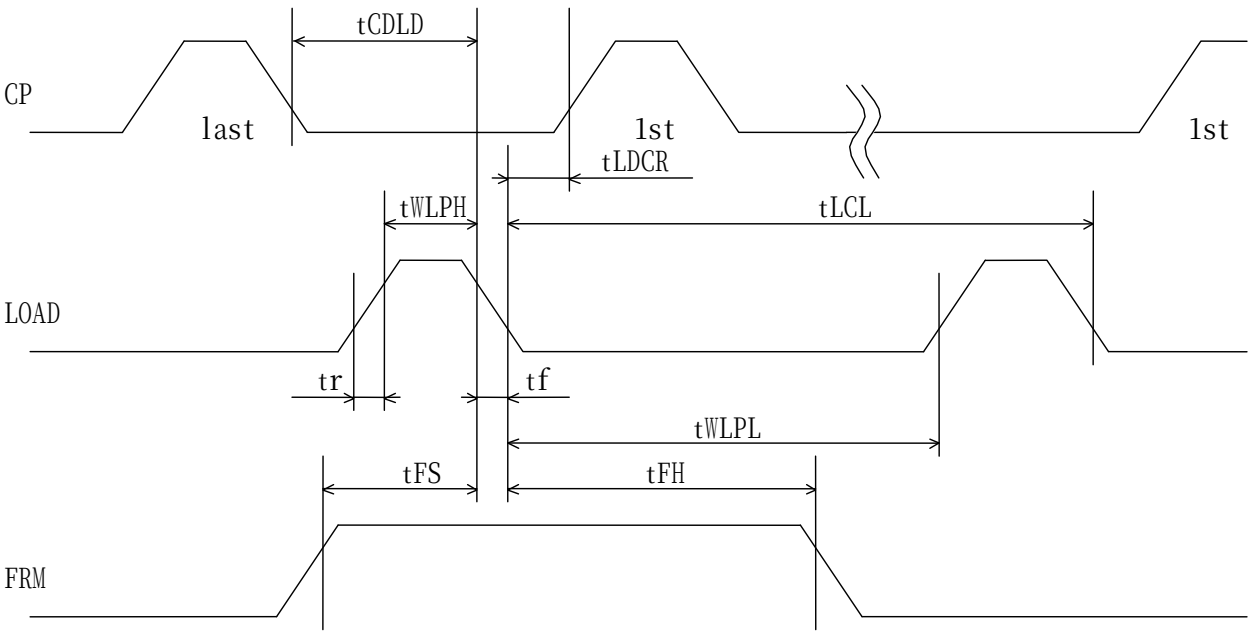

11-1. Switching characteristics (V_{DD} = 5.0V)

Input characteristics ： V_{DD} = +5.0V ± 5%, Temp. = 0～60°C

Item		Symbol	Min.	Max.	Unit
CP cycle	*1	tCCL	100	-	Ns
CP "H" pulse width		tWCLH	30	-	Ns
CP "L" pulse width		tWCLL	30	-	Ns
CP rise up time		trCP	-	15	Ns
CP fall down time		tfCP	-	15	Ns
Data set up time		tDS	25	-	Ns
Data hold time		tDH	25	-	Ns
LOAD "H" pulse width		tWLPH	40	-	Ns
LOAD "L" pulse width		tWLPL	400	-	Ns
LOAD cycle	*2	tLCL	500	-	ns
CP → LOAD delay time		tCDLD	60	-	ns
LOAD → CP delay time		tLDCR	60	-	ns
Input signal rise up time		tr	-	20	ns
Input signal fall down time		tf	-	20	ns
FRM data set up time		tFS	120	-	ns
FRM data hold time		tFH	30	-	ns

*1 CP cycle is adjusted so that FRM signal is 75Hz.

*2 LOAD cycle is constant.

11-2. Switching characteristics (V_{DD} = 3.3V)

Input characteristics ： V_{DD} = +3.3V ± 0.3V, Temp. = 0～60°C

Item		Symbol	Min.	Max.	Unit
CP cycle	*1	tCCL	100	-	ns
CP "H" pulse width		tWCLH	40	-	ns
CP "L" pulse width		tWCLL	40	-	ns
CP rise up time		trCP	-	20	ns
CP fall down time		tfCP	-	20	ns
Data set up time		tDS	35	-	ns
Data hold time		tDH	35	-	ns
LOAD "H" pulse width		tWLPH	50	-	ns
LOAD "L" pulse width		tWLPL	400	-	ns
LOAD cycle	*2	tLCL	500	-	ns
CP → LOAD delay time		tCDLD	60	-	ns
LOAD → CP delay time		tLDCR	80	-	ns
Input signal rise up time		tr	-	20	ns
Input signal fall down time		tf	-	20	ns
FRM data set up time		tFS	120	-	ns
FRM data hold time		tFH	30	-	ns

*1 CP cycle is adjusted so that FRM signal is 75Hz.

*2 LOAD cycle is constant.

12. Supply voltage sequence condition

In normal operation, logic within the LCD module reverses the polarity of the drive voltage every few lines to prevent DC damage to the liquid crystal material. But when a voltage is present on V_{CONT} outside of the time when the V_{DD} logic voltage is stable, a drive voltage is applied to the liquid crystal material without the polarity reversals. This sometimes result in a deterioration of display quality and a reduction in life time.

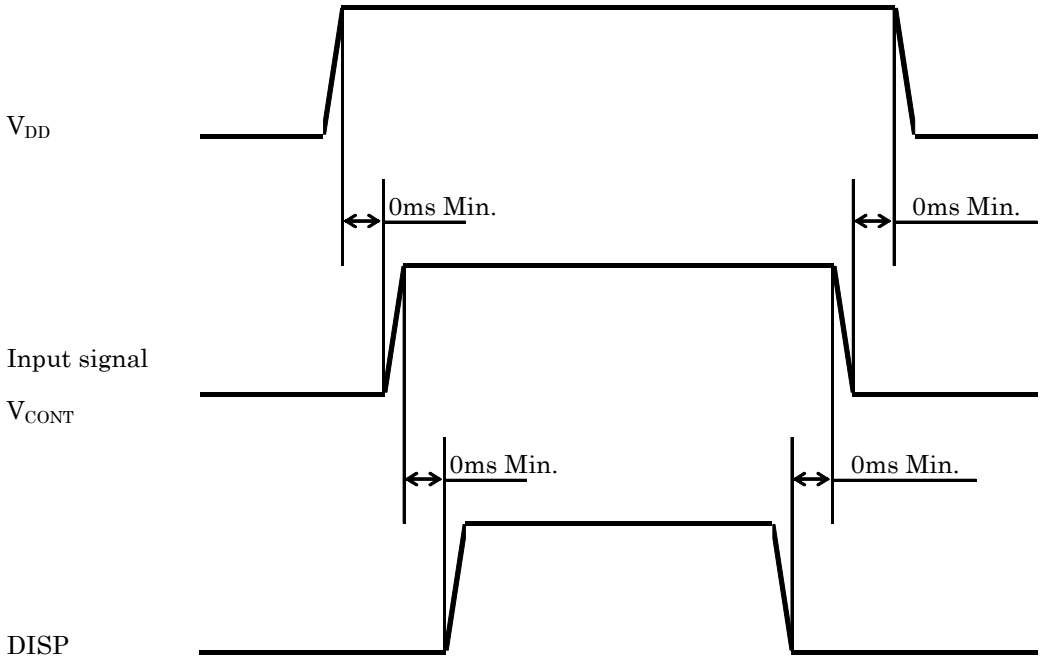

* Input signal: FRM, LOAD, CP, D0～D7

* The above sequence should be designed as to maintain each normal voltage when the liquid crystal module load is applied to your system.

* Control the supply voltage sequence to not float any signal line when the LCD panel is being driven.

13. Backlight characteristics

LED ratings

Item		Symbol	Min.	Typ.	Max.	Unit	Note
Forward current	*1	IF	-	25	-	mA	Ta=0～60°C
Forward voltage	*1	VF	-	23.8	26.6	V	IF=25mA, Ta=0℃
			-	23.1	25.9	V	IF=25mA, Ta=25℃
			-	22.3	25.1	V	IF=25mA, Ta=60℃
Operating life time	*2, *3	T	-	50,000	-	h	IF=25mA, Ta=25℃

*1 For each “AN1-CA1”, “AN2-CA2” and “AN3-CA3”

*2 When brightness decrease 50% of initial brightness.

*3 Life time is estimated data.

* An input current below 8.0mA may reduce the brightness uniformity of the LED backlight. This is because the amount of light from each LED chip is different. Therefore, please evaluate carefully before finalizing the input current.

14. Design guidance for analog touch panel (T/P)

14-1 Electrical (In customer's design, please remember the following considerations.)

1 Do not use the current regulated circuit.

2 Keep the current limit with top and bottom layer. (Please refer to “Electrical absolute maxim um ratings” for details.)

3 Analog T/P can not sense two points touching separately.

4 A contact resistance is appeared at the touch point between top and bottom layer. After this resistance has stable read of the T/P position data.

5 Because noise of inverter or peripheral circuits may interfere signal of touch panel itself it is necessary to design carefully in advance to avoid these noise problem.

14-2 Software

1 Do the "User Calibration".

2 "User Caribration" may be needed with long term using. Include "User Caribration" menu in your software.

3 When drawing a line with a stylus, there may be a slight discontinuity when the stylus passes over a spacer-dot. If necessary, please provide a compensation feature within your software.

14-3 Mounting on display and housing bezel

1 Do not use an adhesive tape to bond it on the front of T/P and hang it to the housing bezel.

2 Never expand the T/P top layer (PET-film) like a balloon by internal air pressure. The life of the T/P will be extremely short.

3 If a dew will be on the heat-sealed area or exposed traces at the end of a flexible tail, the migration of silver can occur. This will cause sometimes a short circuit.

15. Lot number identification

The lot number shall be indicated on the back of the backlight case of each LCD.

KCG057QVLDJ-G000 - □□ - □□ - □ MADE IN □□□□□

↓↓ ↓ ↓ ↓
1 2 3 4 5

No1. - No5. above indicate
1. Year code
2. Month code
3. Date
4. Version Number
5. Country of origin (Japan or China)

Year	2008	2009	2010	2011	2012	2013
Code	8	9	0	1	2	3

Month	Jan.	Feb.	Mar.	Apr.	May	Jun.
Code	1	2	3	4	5	6

Month	Jul.	Aug.	Sep.	Oct.	Nov.	Dec.
Code	7	8	9	X	Y	Z

16. Warranty

16-1. Incoming inspection

Please inspect the LCD within one month after your receipt.

16-2. Production warranty

Kyocera warrants its LCD's for a period of 12 months from the ship date. Kyocera shall, by mutual agreement, replace or re-work defective LCD's that are shown to be Kyocera's responsibility.

17. Precautions for use

17-1. Installation of the LCD

1) The LCD module has a grounding hole. Please ground the module to prevent noise and to stabilize its performance as circumstances demand.
2) The LCD shall be installed so that there is no pressure on the LSI chips.
3) The LCD shall be installed flat, without twisting or bending.
4) Please design the housing window so that its edges are between the active area and the effective area of the LCD screen.
Must maintain a gap between inside of bezel and touch panel to avoid malfunction or electrode damage of touch panel.

5) Please refer to the following our recommendable value of Clamp-down torque when installing.
Clamp-down torque : 0.32±0.03N・m
Please set up 'SPEED-LOW', 'SOFT START-SLOW' when using electric driver.
Recommendable screw JIS tapping screw two types nominal dia.3.0mm installing boss hole depth 4.4±0.2mm
Please be careful not to use high torque which may damage LCD module in installation.

17-2. Static electricity

1) Since CMOS ICs are mounted directly onto the LCD glass, protection from static electricity is required.
2) Workers should use body grounding. Operator should wear ground straps.

17-3. LCD operation

1) The LCD shall be operated within the limits specified. Operation at values outside of these limits may shorten life, and/or harm display images.
2) Adjust the "Supply voltage for LCD driving (V_{CONT})" to obtain optimum viewing angle and contrast ratio.

17-4. Storage

1) The LCD shall be stored within the temperature and humidity limits specified.
Store in a dark area, and protect the LCD from direct sunlight or fluorescent light.
2) Always store the LCD so that it is free from external pressure onto it.

17-5. Usage

1) DO NOT store in a high humidity environment for extended periods. Polarizer degradation bubbles, and/or peeling off of the polarizer may result.
2) Do not push or rub the touch panel's surface with hard to sharp objects such as knives, or the touch panel may be scratched.
3) When the touch panel is dirty, gently wipe the surface with a soft cloth, sometimes moistened by a little Ethanol. If a hazardous chemical is dropped on the touch panel by mistake, wipe it off right away to prevent human contact.
4) Touch panel edges are sharp. Handle the touch panel with enough care to prevent cuts.
5) Always keep the LCD free from condensation during testing. Condensation may permanently spot or stain the polarizer.
6) Do not pull the LED lead wires and do not bend the root of the wires. Housing should be designed to protect LED lead wires from external stress.
7) Do not disassemble LCD module because it will result in damage.
8) This Kyocera LCD module has been specifically designed for use in general electronic devices, but not for use in a special environment such as usage in an active gas. Hence, when the LCD is supposed to be used in a special environment, evaluate the LCD thoroughly beforehand and do not expose the LCD to chemicals such as an active gas.
9) Please do not use solid-base image pattern for long hours because a temporary afterimage may appear. We recommend using screen saver etc. in cases where a solid-base image pattern must be used.
10) Liquid crystal may leak when the module is broken. Be careful not to let the fluid go into your eyes and mouth. In the case the fluid touches your body; rinse it off right away with water and soap.

18. Reliability test data

Test item	Test condition	Test time	Judgement
High temp. atmosphere	70°C	240h	Display function : No defect Display quality : No defect Current consumption : No defect
Low temp. atmosphere	-20°C	240h	Display function : No defect Display quality : No defect Current consumption : No defect
High temp. humidity atmosphere	40°C 90% RH	240h	Display function : No defect Display quality : No defect Current consumption : No defect
Temp. cycle	-20°C 0.5h R.T. 0.5h 70°C 0.5h	10cycles	Display function : No defect Display quality : No defect Current consumption : No defect
High temp. operation	60°C	500h	Display function : No defect Display quality : No defect Current consumption : No defect
Point Activation life	Polyacetal stylus (R0.8) Hitting force 3N Hitting speed 2 time/s	one million times	Terminal resistance : No defect Insulation resistance : No defect Linearity : No defect Actuation Force : No defect

* Each test item uses a test LCD only once. The tested LCD is not used in any other tests.

* The LCD is tested in circumstances in which there is no condensation.

* The reliability test is not an out-going inspection.

* The result of the reliability test is for your reference purpose only.
The reliability test is conducted only to examine the LCD's capability.

No	Description	Drawn	Checked	Checked	Approved
⚠1	·Change Touch Panel FPC (タッチパネルFPC長さ変更)	'06.09.11 野崎	'06.09.11 茶圓		'06.09.11 朝倉
⚠2	·Delete Recommended Matching Connecter (T.P.) (タッチパネルインターフェース推奨コネクター削除)	'07.08.25 野崎	'07.08.30 茶圓		'07.08.30 阿部
⚠3	·Delete Dimension (寸法削除) ·Add SECTION E-E (断面図 E-E 追加)	'07.10.23 山方	'07.10.23 茶圓		'07.10.23 阿部
⚠4	·Delete Recommended Matching Connecter (T.P.) (タッチパネルインターフェース推奨コネクター削除)	'07.10.29 野崎	'07.10.30 今村		'07.10.30 阿部

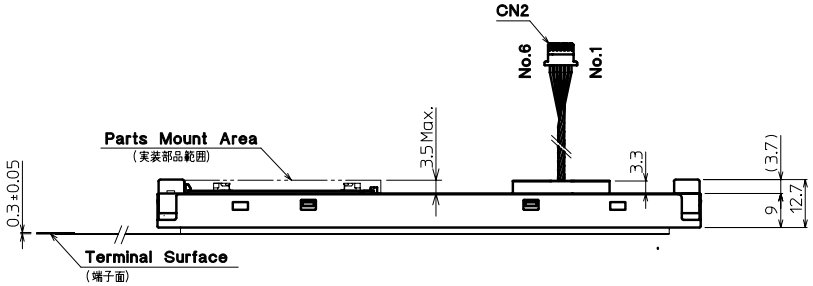

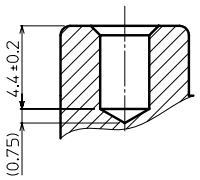

⚠3 SECTION E-E 5:1
(4POINT : 4箇所)

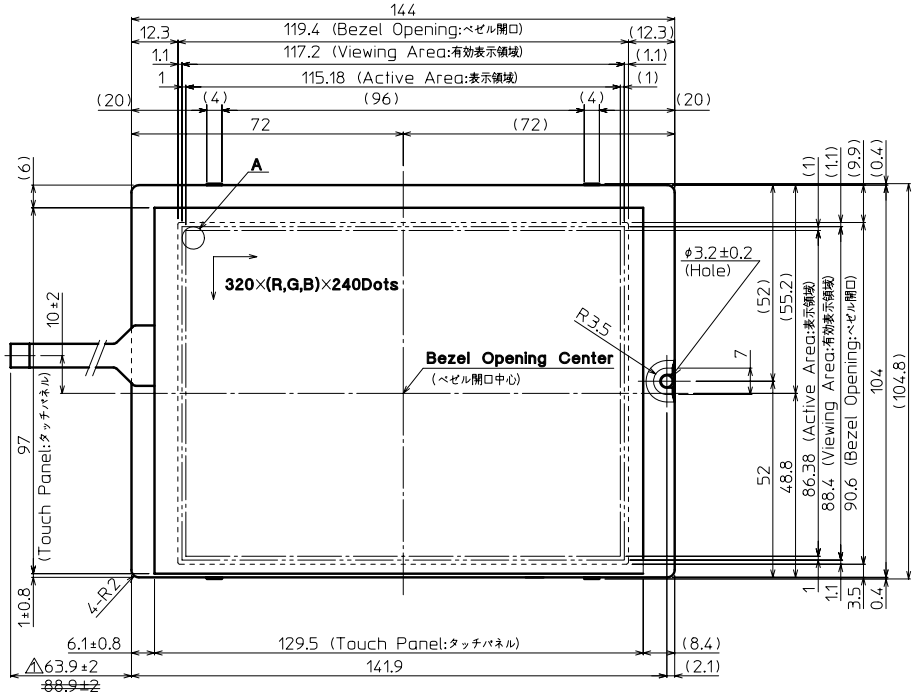

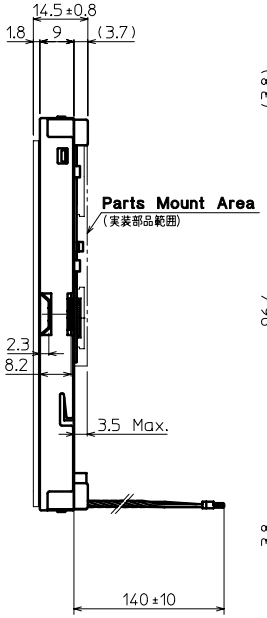

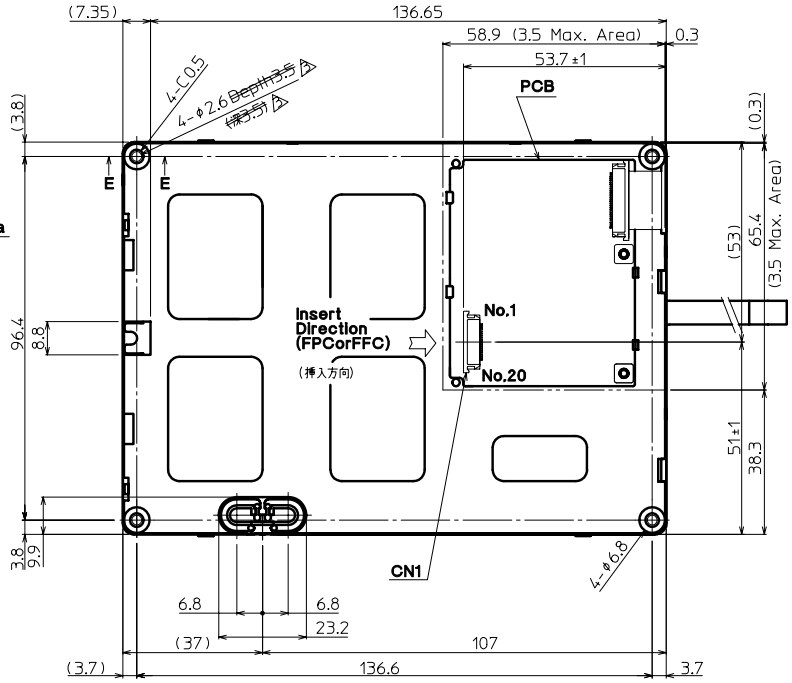

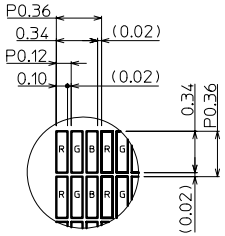

DETAIL A (Dot Size)
(NTS)

CN2 Pin Assign

	Description	Cable Color
No.1	Anode 1	Black(黒)
No.2	Anode 2	Red(赤)
No.3	Anode 3	White(白)
No.4	Cathode 1	Black(黒)
No.5	Cathode 2	Red(赤)
No.6	Cathode 3	White(白)

Note.(注記)
1. Connector CN1: 08-6210-020-340-800+ (ELCO)
(コネクター) CN2:SHLP-06V-S-B (JST)
2. Matching Connector CN2:SM06B-SHLS-TF (JST)
(適合コネクター) SM06B-SHLS-TF(LF)(SN) (JST)
~~⚠3. Recommended Matching Connecter (Touch Panel)~~
~~⚠(タッチパネルインターフェース推奨コネクター)~~
~~⚠:Series 6216 (ELCO) ,Series FE,FFS (JST)~~
~~⚠:Series SFD (FCI)~~
4. The Information of LCD is displayed starting at the upper left hand corner, moving right then down to the lower right hand corner.
(LCDにおいて、画像データの表示は左上コーナーから始まり、右へ進み下へ送られ右下コーナーへ向かう。)
5. Tolerance without indication:±0.5
(指示無き公差)

Material 材質	Treatment 処理	Approved	Checked	Checked	Drawn	Scale	Title		Year-Month-Day	Size
		'06.06.14 朝倉		'06.06.14 茶圓	野崎	1:1(NTS)	KCG057QVLDJ	KYOCERA	'06.06.13	2
Quantity 製作数	Description; 備考 RoHS 06006AAA						Outline Dimensions	Drawing No.	121A5050300-4	1/2

No	Description	Drawn	Checked	Checked	Approved
⚠	·Change Touch Panel FPC (タッチパネルFPC長さ変更)	'06.09.11 野崎	'06.09.12 茶圓		'06.09.12 朝倉
⚠	·Delete Comment (コメント削除)	'07.08.25 野崎	'07.08.30 茶圓		'07.08.30 阿部
⚠	·1/2 Rev.UP	'07.10.23 山方	'07.10.23 茶圓		'07.10.23 阿部
⚠	·1/2 Rev.UP	'07.10.29 野崎	'07.10.30 今村		'07.10.30 阿部

Note(注記)

	Name(名称)	Explanation(説明)
1	T.P.	Touch panel (タッチパネル)
2	T.P. Active Area (T.P.アクティブエリア)	Operating area of touch panel (タッチパネルの動作範囲)
3	T.P. Viewing Area (T.P.ビューイングエリア)	Warranty area of touch panel's appearance (タッチパネルの外観(傷・異物等)保証範囲)
		By giving pressure between the active area and the effective viewing area of the touch panel, there is a possibility that the touch panel will operate. (タッチパネルアクティブエリアとタッチパネルビューイングエリア間は荷重をかけた場合は、タッチパネルが動作する可能性があります。)

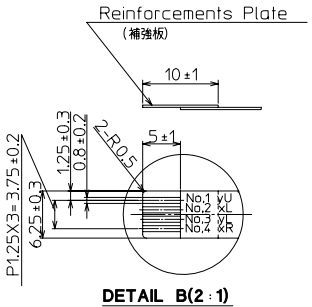

DETAIL B(2:1)

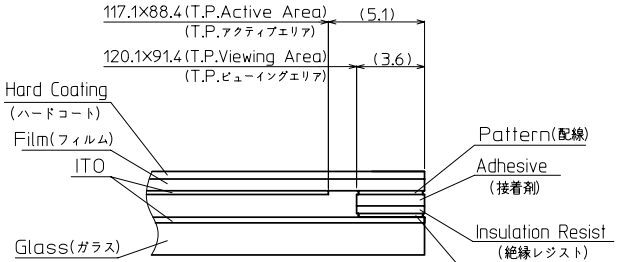

SECTION D–D(NTS)

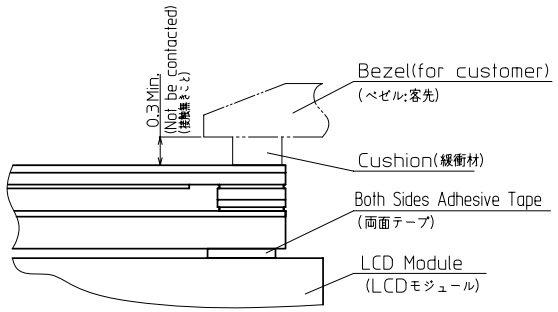

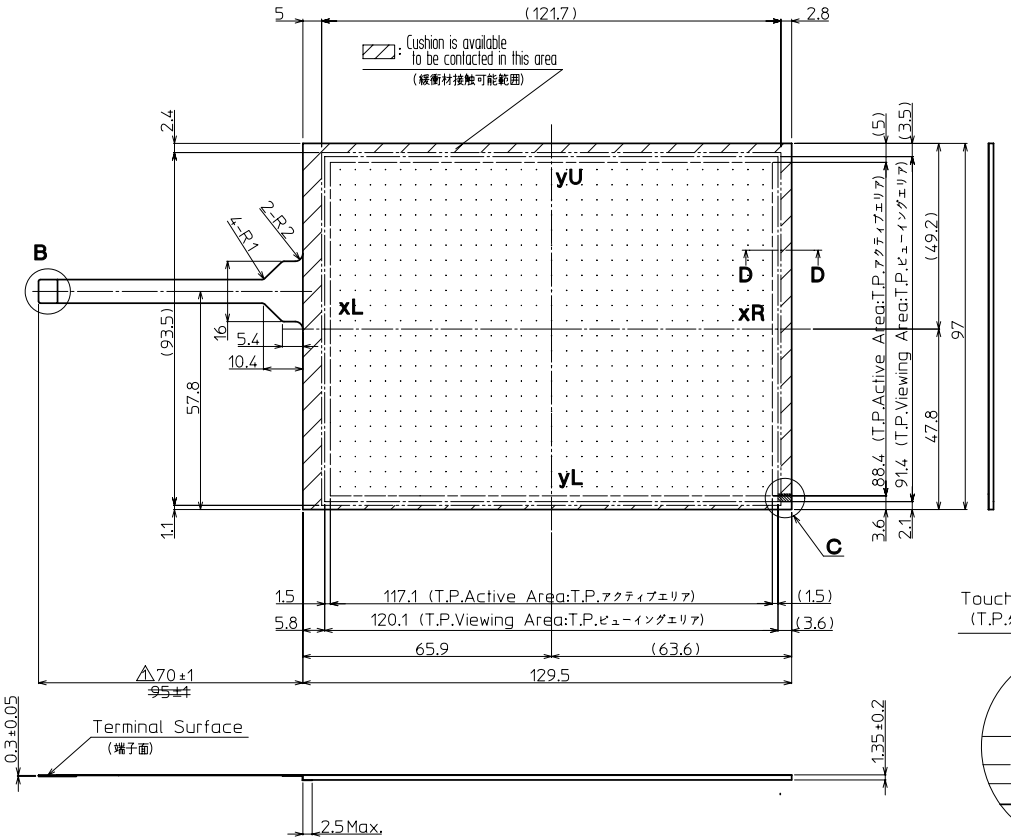

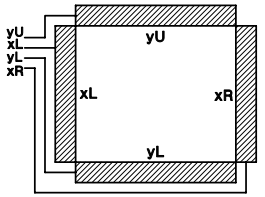

Touch Panel Pin–assign
(タッチパネル ピンアサイン)

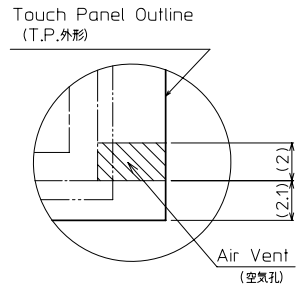

DETAIL C(5:1)

Precaution in use of touch panel.
(タッチパネル使用上の注意事項)

1.Fix touch panel at LCD module and the rear side of touch panel.
(タッチパネルの固定はLCDモジュール側とタッチパネル裏面とで行なうこと。)

2.Must maintain a gap between inside of bezel and touch panel to avoid malfunction or electrode damage of touch panel.
(ベゼル内側とタッチパネルの接触厳禁。誤動作や電極破損の原因となります。)

Precaution in use of touch panel.
(タッチパネル使用上の注意事項)
There is vent channel to equalize air pressure between the inner space of the touch panel and the atmosphere.
Please make sure it is not blocked by your housing and mounting method.
(タッチパネルの中には内圧と外圧を均一にするため通気孔を設けています。
取り付け時にこの通気孔を塞がないようにしてください。)

Material 材質	Treatment 処理	Approved	Checked	Checked	Drawn	Scale	Title		Year–Month–Day	Size
		'06.06.14 朝倉		'06.06.14 茶圓	野崎	1:1(2:1,5:1,NTS)	KCG057QVLDJ	KYOCERA	'06.06.13	2
Quantity 製作数	Description; 備考 RoHS 06006AAA						T.P. Outline Dimensions	Drawing No.	121A5050300–4	2/2

Spec No.	TQ3C 8EAC0 E2DDV68 00
Date	March 14, 2008

KYOCERA INSPECTION STANDARD

TYPE : KCG057QVLDJ-G000

KYOCERA CORPORATION
KAGOSHIMA HAYATO PLANT
LCD DIVISION

Original Issue Date	Designed by : Engineering dept.			Confirmed by : QA dept.	
	Prepared	Checked	Approved	Checked	Approved
March 14, 2008	D. Ajisaka	M. Ishimori	Y. Matsumoto	S. Higashi	

Revision record

Date	Designed by : Engineering dept.			Confirmed by : QA dept.	
	Prepared	Checked	Approved	Checked	Approved

Rev.No.	Date	Page	Descriptions

Visuals specification

1) Note

Item	Note	
General	1.When defects specified in this Inspection Standards are inspected, operating voltage (V_{OP}) shall be set at the level where optimized contrast is available. Display quality is applied up to effective viewing area. (Bi-level INSPECTION) 2.This inspection standard about the image quality shall be applied to any defect within the effective viewing area and shall not be applicable to outside of the area. 3.Should any defects which are not specified in this standard happen, additional standard shall be determined by mutual agreement between customer and Kyocera. 4.Inspection conditions Luminance : 500 Lux minimum. Inspection distance : 300 mm(from the sample) Temperature : 25±5°C Direction : right above	
Definition of inspection item	Pinhole, Bright spot Black spot, Scratch Foreign particle	The color of a small area is different from the remainder. The phenomenon does not change with voltage.
	Contrast variation	The color of a small area is different from the remainder. The phenomenon change with voltage.
	Polarizer (Scratch, Bubble, Dent)	Scratch, Bubble and Dent in the polarizer which can be observed in on / off state.

2)Standard

<table>
<tr><th>Inspection item</th><th>Judgement standard</th></tr>
<tr><td>Pinhole, Bright spot,
Black spot, Foreign particle</td><td>
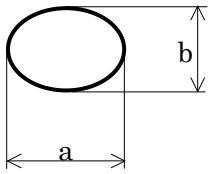

d = (a + b) / 2
<table>
<tr><th>Category</th><th>Size(mm)</th><th>Acceptable number</th></tr>
<tr><td>A</td><td>d ≦ 0.2</td><td>Neglected</td></tr>
<tr><td>B</td><td>0.2 ＜ d ≦ 0.3</td><td>5</td></tr>
<tr><td>C</td><td>0.3 ＜ d ≦ 0.5</td><td>3</td></tr>
<tr><td>D</td><td>0.5 ＜ d</td><td>0</td></tr>
</table>
</td></tr>
<tr><td>Scratch, Foreign particle</td><td>
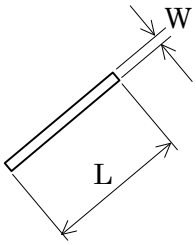

<table>
<tr><th></th><th>Width (mm)</th><th>Length (mm)</th><th>Acceptable number</th></tr>
<tr><td>A</td><td>W ≦0.03</td><td>-</td><td>Neglected</td></tr>
<tr><td>B</td><td rowspan="3">0.03＜ W ≦0.10</td><td>L ≦2.0</td><td>Neglected</td></tr>
<tr><td>C</td><td>2.0＜ L ≦4.0</td><td>3</td></tr>
<tr><td>D</td><td>4.0＜ L</td><td>0</td></tr>
<tr><td>E</td><td>0.10＜ W</td><td>-</td><td>According to ‘Circular’</td></tr>
</table>
</td></tr>
<tr><td>Contrast variation</td><td>
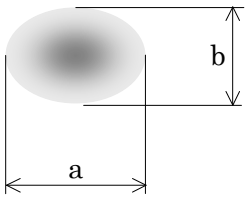

d = (a + b) / 2
<table>
<tr><th>Category</th><th>Size (mm)</th><th>Acceptable number</th></tr>
<tr><td>A</td><td>d ≦ 0.5</td><td>Neglected</td></tr>
<tr><td>B</td><td>0.5 ＜ d ≦ 0.7</td><td>3</td></tr>
<tr><td>C</td><td>0.7 ＜ d</td><td>0</td></tr>
</table>
</td></tr>
</table>

Inspection item	Judgement standard
Polarizer (Scratch, Bubble, Dent)	(1) Scratch

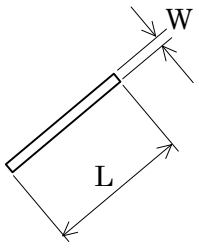

	Width (mm)	Length (mm)	Acceptable No.
A	W ≦0.1	-	Neglected
B	0.1< W ≦0.3	L ≦5.0	Neglected
C		5.0< L	0
D	0.3< W	-	0

(2) Bubble (dent)

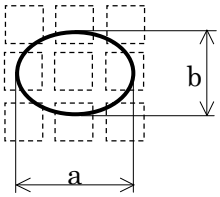

d = (a + b) / 2

Category	Size (mm)	Acceptable number
A	d ≦ 0.2	Neglected
B	0.2 < d ≦ 0.3	5
C	0.3 < d ≦ 0.5	3
D	0.5 < d	0

<table>
<tr><th>Inspection item</th><th>Judgement standard</th></tr>
<tr><td>Scratch,
Foreign particle
(Touch screen portion)</td><td>(W = Width, L = Length, D = Diameter = (major axis＋minor axis)/ 2)
<table>
<tr><th>Item</th><th>Width(mm)</th><th>Length(mm)</th><th>Acceptable number</th></tr>
<tr><td rowspan="4">Scratch</td><td>W ≦ 0.03</td><td>L ≦ 20</td><td>Neglected</td></tr>
<tr><td>0.03 ＜ W ≦ 0.05</td><td>L ≦ 10</td><td>2pces within ϕ20mm</td></tr>
<tr><td>0.05 ＜ W ≦ 0.08</td><td>L ≦ 6</td><td>2pces within ϕ20mm</td></tr>
<tr><td>0.08 ＜ W ≦ 0.1</td><td>L ≦ 4</td><td>1pces within φ30mm</td></tr>
<tr><td rowspan="2">Foreign
(line like)</td><td>W ≦ 0.05</td><td>Neglected</td><td>Neglected</td></tr>
<tr><td>0.05 ＜ W ≦ 0.1</td><td>L ≦ 5</td><td>2pces within ϕ30mm</td></tr>
<tr><td rowspan="2">Foreign
(circle like)</td><td colspan="2">D ≦ 0.2</td><td>Neglected</td></tr>
<tr><td colspan="2">0.2 ＜ D ≦ 0.3</td><td>2pces within ϕ30mm</td></tr>
</table>
Above are applied to the visible area.
Unless there are foreign particle and damage affected seriously to the electrical performance out of the visible area, we approve of this product.</td></tr>
<tr><td>Glass crack
(Touch screen portion)</td><td>
<table>
<tr><th>Item</th><th colspan="3">Size (mm)</th><th>Acceptable number</th></tr>
<tr><td>Conner crack</td><td rowspan="3"> 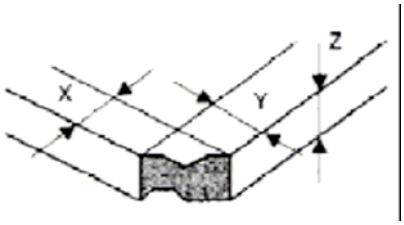
</td><td>X</td><td>≦3</td><td rowspan="3">2 pcs
/panel</td></tr>
<tr><td>Y</td><td>≦3</td></tr>
<tr><td>Z</td><td>＜t</td></tr>
<tr><td>Crack in other area than in corner</td><td rowspan="3"> 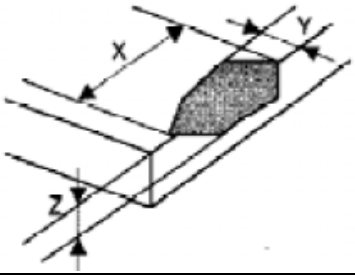
</td><td>X</td><td>≦5</td><td rowspan="3">2 pcs
/side</td></tr>
<tr><td>Y</td><td>≦1.5</td></tr>
<tr><td>Z</td><td>＜t</td></tr>
<tr><td>Progressive crack</td><td colspan="3"> 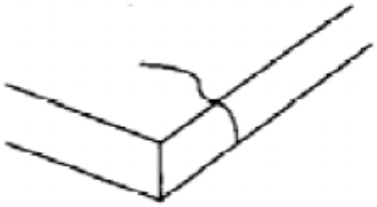 </td><td>0 pcs
(NG even 1pcs)</td></tr>
</table>
Above are applied to the visible area.
Unless there are foreign particle and damage affected seriously to the electrical performance out of the visible area, we approve of this product.</td></tr>
</table>