Temperature Compensated Crystal Oscillators (TCXO, VCTCXO)
Surface Mount Type TCXO (LSI Type) KT2520 Series

KYOCERA

2.5×2.0mm

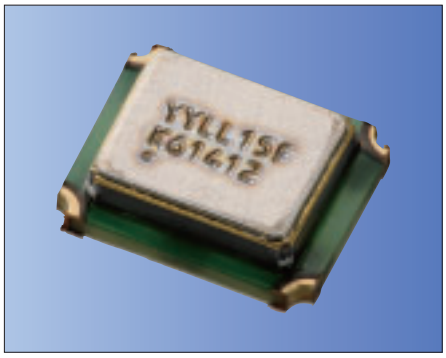

RoHS Compliant

Features

- Miniature SMD type (2.5×2.0×0.8mm)
- Freq. temp. characteristics.
  : ±2.0×10^{-6}/ –30 to +85°C
  : ±0.5×10^{-6}/ –30 to +85°C (for GPS)
- 1.68 to 3.63V drive available
- Reflow compatible
- Operating Temp. –40 to +105°C (Option)
- Ultra low supply current 800µA typ. Conditions of 26MHz and 1.0Vp-p (Option)
- Disable Function (Option)
- AEC-Q200 qualified
- AEC-Q100 qualified (Option)

Applications

- Mobile Communications, W-LAN
- Low power radio communications
- GPS Unit

How to Order

KT2520K 26000 □ □ □ □□ □ xx
① ② ③ ④ ⑤ ⑥ ⑦ ⑧

① Series
② Output Frequency
③ Freq. Temp. Chrst.

A	±0.5×10^{-6}
B	±1.0×10^{-6}
C	±1.5×10^{-6}
D	±2.0×10^{-6}

④ Lower Operating Temp.

C	–30°C
E	–20°C
G	–10°C

⑤ Upper Operating Temp.

W	+85°C
V	+80°C
U	+75°C

⑥ Supply Voltage

18	1.8V	28	2.8V
30	3.0V	33	3.3V

⑦ Voltage Control Function

T	TCXO
Spec. Code*	VCTCXO

*Please contact us for Spec. Code.

⑧ Individual Specification

Packaging (Tape & Reel 12000 pcs./ reel)

Specifications

Item	Symbol	Conditions	Min.	Max.	Units
Output Frequency Range	fo		10	60	MHz
Frequency Tolerance	f_tol	vs Temperature	–0.5/ –2	+0.5/ +2	×10^{-6}
		vs Load	–0.2	+0.2	
		vs Voltage	–0.2	+0.2	
Frequency Aging	f_age	Per Year	–1	+1	×10^{-6}
Storage Temperature Range	T_stg		–40	+85	°C
Operating Temperature Range	T_use		–30	+85	°C
Voltage Control Range	f_cont	Positive	±8	±15	×10^{-6}
Supply Voltage	Vcc		1.68	3.63	V
Output Level	Vpp	Clipped Sine*, Load: 10k ohm / / 10pF	0.8	—	Vp-p
Current Consumption	Icc		—	2	mA
Harmonics	—		—	–5	dBc

* : A DC-cut capacitor is not embedded in this crystal oscillator. Connect a DC-cut capacitor (≥1nF) to the line-out terminal of the oscillator.
* Please contact us for other specifications.

Dimensions

(Unit: mm)

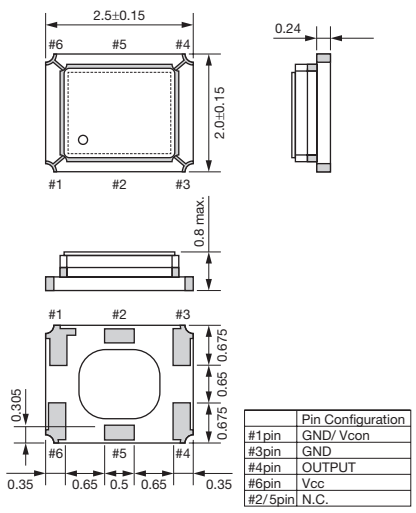

	Pin Configuration
#1pin	GND/ Vcon
#3pin	GND
#4pin	OUTPUT
#6pin	Vcc
#2/ 5pin	N.C.

Test Circuit

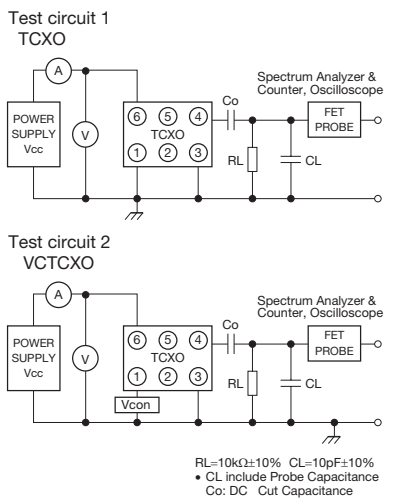

Recommended Land Pattern

(Unit: mm)

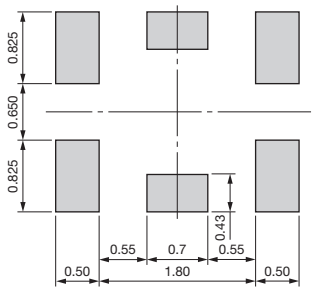

Note: A capacitor of value 0.01µF between Vcc and GND is recommended.

As of March 2018