2-Phase Hybrid Stepping Motor
KV42 Series

KV42

4.09°/step

□42mm NEMA17

■Applications

OA , FA , Medical Devices
Money-handling &
Banking equipment

SINGLE SHAFT

MODEL
KV4234-N4B801
KV4239-T4B801
KV4239-N4B801
KV4242-N4B801
KV4248-N4B801

*Low Vibration Type

OPTION

KV42LBS300

■FEATURES

- High Speed・High Torque,
- KH42-B900 Successor Model

■SPECIFICATIONS

STEP ANGLE ° /step	VOLTAGE V	CURRENT A/PHASE	WINDING RESISTANCE Ω/PHASE	INDUCTANCE mH/PHASE	HOLDING TORQUE mN・m	ROTOR INERTIA g・cm²	MODEL
4.09	2.52	1.4	1.8	2.7	200	42	KV4234-N4B801
4.09	2.94	1.4	2.1	4.2	215	59	KV4239-T4B801
4.09	2.94	1.4	2.1	3.8	260	59	KV4239-N4B801
4.09	3.22	1.4	2.3	4.5	290	69	KV4242-N4B801
4.09	3.78	1.4	2.7	5.0	390	79	KV4248-N4B801

[GENERAL SPECIFICATIONS]

INSULATION RESISTANCE	500V DC 100MΩ min.(at normal temp.& humidity,between lead and case)
DIELECTRIC STRENGTH	500V AC 50Hz 1min.(at normal temp.& humidity,between lead and case)
AMBIENT TEMP. AND HUMIDITY	-10℃～+50℃、5%～95%RH(noncondensing)
STORAGE TEMP.AND HUMIDITY	-20℃～+70℃、5%～95%RH(noncondensing)
TEMPERATURE. RISE	80K max(By resistance method)
POSITION ACCURACY	±10%

■SPEED-TORQUE CHARACTERISTICS

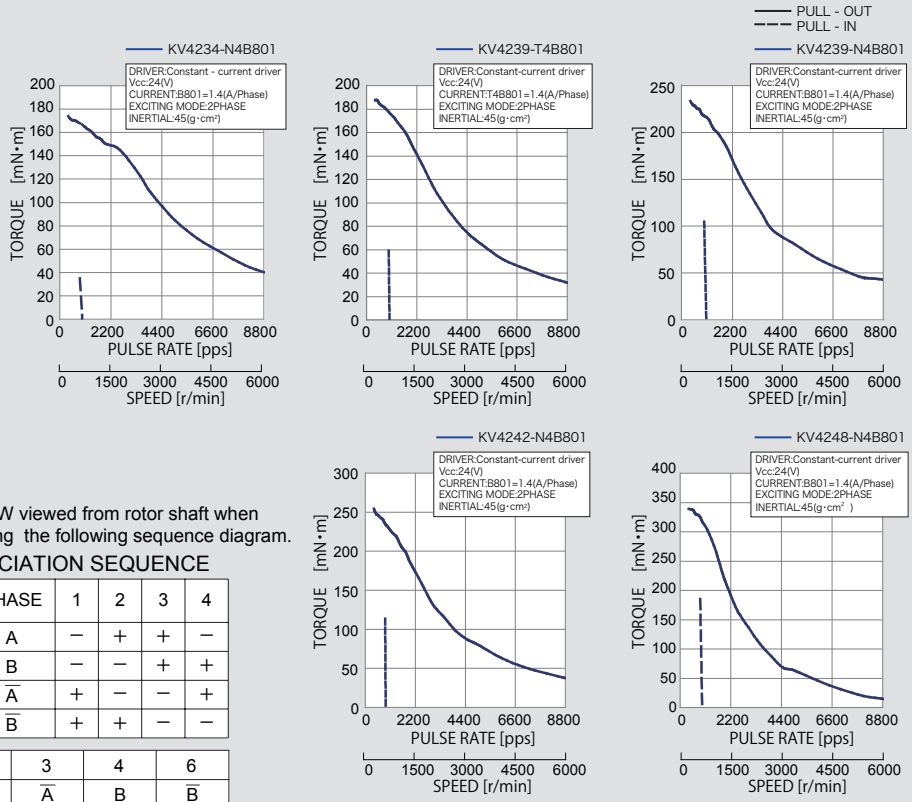

■CONNECTION DIAGRAMS

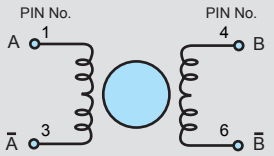

CCW viewed from rotor shaft when using the following sequence diagram.

EXCIATION SEQUENCE

PHASE	1	2	3	4
A	−	+	+	−
B	−	−	+	+
Ā	+	−	−	+
B̄	+	+	−	−

Warning
Unlike other series, this series will rotate in reverse.

PHR-6 (PIN NO.)	1	3	4	6
PHASE	A	Ā	B	B̄
COLOR OF LEAD	RED	BLUE	YELLOW	WHITE

■DIMENSIONS

Unit = mm

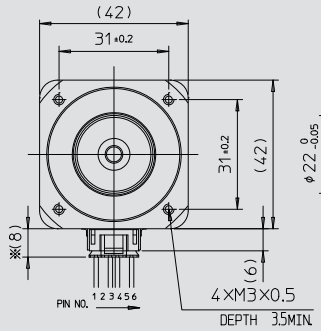

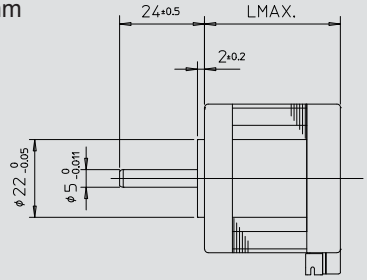

The KV42 motor is supplied without a leadwire assembly.
This must be ordered as a separate part.

MODEL	L mm(inch)	mass kg
KV4234-N4B801	34(1.34)	0.21
KV4239-T4B801	39(1.54)	0.26
KV4239-N4B801	39(1.54)	0.26
KV4242-N4B801	42(1.65)	0.32
KV4248-N4B801	48(1.89)	0.37

■OPTION (Leadwire Assembly)

MODEL:KV42LBS300

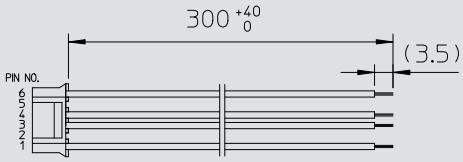

■CONNECTOR SPECIFICATIONS

Maker	JST
Applicable Housing	PHR-6
Applicable Terminal	SPH-002T-P0.5S
Lead Wire	UL3266 AWG26