SANYO

FILE NO.

SERVICE MANUAL

LCD TV

LCD-32XR56DZ

PRODUCT CODE No.
1 682 346 42

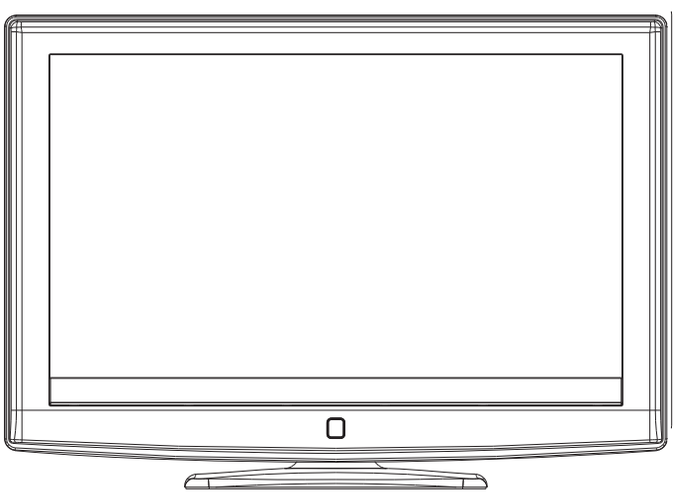

REFERENCE No.:SM0915056

CONTENTS

Safety precautions…… 3
Alignment instructions …… 5
Method of software upgrading…… 11
Working principle analysis of the unit…… 15
Block diagram…… 18
IC block diagram and instruction…… 19
Wiring diagram …… 23
Troubleshooting guide …… 24
Schematic diagram…… 27
APPENDIX-A: Main assembly list
APPENDIX-B: Exploded View

Attention: This service manual is only for service personnel to take reference with. Before servicing please read the following points carefully.

Safety precautions

1. Instructions

Be sure to switch off the power supply before replacing or welding any components or inserting/plugging in connection wire Anti static measures to be taken (throughout the entire production process!):

a) Do not touch here and there by hand at will;

b) Be sure to use anti static electric iron;

c) It's a must for the welder to wear anti static gloves.

Please refer to the detailed list before replacing components that have special safety requirements. Do not change the specs and type at will.

2. Points for attention in servicing of LCD

2.1 Screens are different from one model to another and therefore not interchangeable. Be sure to use the screen of the original model for replacement.

2.2 The operation voltage of LCD screen is 700-825V. Be sure to take proper measures in protecting yourself and the machine when testing the system in the course of normal operation or right after the power is switched off. Please do not touch the circuit or the metal part of the module that is in operation mode. Relevant operation is possible only one minute after the power is switched off.

2.3 Do not use any adapter that is not identical with the TV set. Otherwise it will cause fire or damage to the set.

2.4 Never operate the set or do any installation work in bad environment such as wet bathroom, laundry, kitchen, or nearby fire source, heating equipment and devices or exposure to sunlight etc. Otherwise bad effect will result.

2.5 If any foreign substance such as water, liquid, metal slices or other matters happens to fall into the module, be sure to cut the power off immediately and do not move anything on the module lest it should cause fire or electric shock due to contact with the high voltage or short circuit.

2.6 Should there be smoke, abnormal smell or sound from the module, please shut the power off at once. Likewise, if the screen is not working after the power is on or in the course of operation, the power must be cut off immediately and no more operation is allowed under the same condition.

2.7 Do not pull out or plug in the connection wire when the module is in operation or just after the power is off because in this case relatively high voltage still remains in the capacitor of the driving circuit. Please wait at least one minute before the pulling out or plugging in the connection wire.

2.8 When operating or installing LCD please don't subject the LCD components to bending, twisting or extrusion, collision lest mishap should result.

2.9 As most of the circuitry in LCD TV set is composed of CMOS integrated circuits, it's necessary to pay attention to anti statics. Before servicing LCD TV make sure to take anti static measure and ensure full grounding for all the parts that have to be grounded.

2.10 There are lots of connection wires between parts behind the LCD screen. When servicing or moving the set please take care not to touch or scratch them. Once they are damaged the screen

would be unable to work and no way to get it repaired.
If the connection wires, connections or components fixed by the thermotropic glue need to disengage when service, please soak the thermotropic glue into the alcohol and then pull them out in case of dagmage.
2.11 Special care must be taken in transporting or handling it. Exquisite shock vibration may lead to breakage of screen glass or damage to driving circuit. Therefore it must be packed in a strong case before the transportation or handling.
2.12 For the storage make sure to put it in a place where the environment can be controlled so as to prevent the temperature and humidity from exceeding the limits as specified in the manual. For prolonged storage, it is necessary to house it in an anti-moisture bag and put them altogether in one place. The ambient conditions are tabulated as follows:

Temperature	Scope for operation	5 ~ +35 ^{o}C
	Scope for storage	-15~ +45 ^{o}C
Humidity	Scope for operation	20% ~ 80%
	Scope for storage	<= 80%

2.13 Display of a fixed picture for a long time may result in appearance of picture residue on the screen, as commonly called “ghost shadow”. The extent of the residual picture varies with the maker of LCD screen. This phenomenon doesn’t represent failure. This “ghost shadow” may remain in the picture for a period of time (several minutes). But when operating it please avoid displaying still picture in high brightness for a long time.

3. Points for attention during installation

3.1 The front panel of LCD screen is of glass. When installing it please make sure to put it in place.
3.2 For service or installation it’s necessary to use specified screw lest it should damage the screen.
3.3 Be sure to take anti dust measures. Any foreign substance that happens to fall down between the screen and the glass will affect the receiving and viewing effect
3.4 When dismantling or mounting the protective partition plate that is used for anti vibration and insulation please take care to keep it in intactness so as to avoid hidden trouble.
3.5 Be sure to protect the cabinet from damage or scratch during service, dismantling or mounting.

Alignment instructions

Test equipment

PM5518 (video signal generator)
VG-848 (VGA, YPbPr signal generator)
VG-849 (HDMI digital video signal generator)
CA210 (color analyzer)

1 Alignment flow

1.1 Voltage of power supply test

According to the wiring diagram “9232KE5601JL”, connect power board, digital board, IR board correctly; then power on and press key “standby” .

a) Test voltage of socket X801 each pin in turn listed as **Table 1.**

Table 1 Voltage of X801 each pin

X801	Pin1	2	3	4	5、6	7 、8	9	10	11
Voltage	8.55 V～9.45 V	0	4.85 V～5.35 V	0	11.4 V～12.6 V	0	4.85 V～5.35 V	0	>2.5 V

b) Test voltage of socket XV03 each pin in turn listed as **Table 2.**

Table 2 Voltage of XV03 each pin

XV03	Pin1、2	3、4、5
Voltage	23.8 V～25.2 V	0

1.2 Adjustment flow chart as **Fig.1**

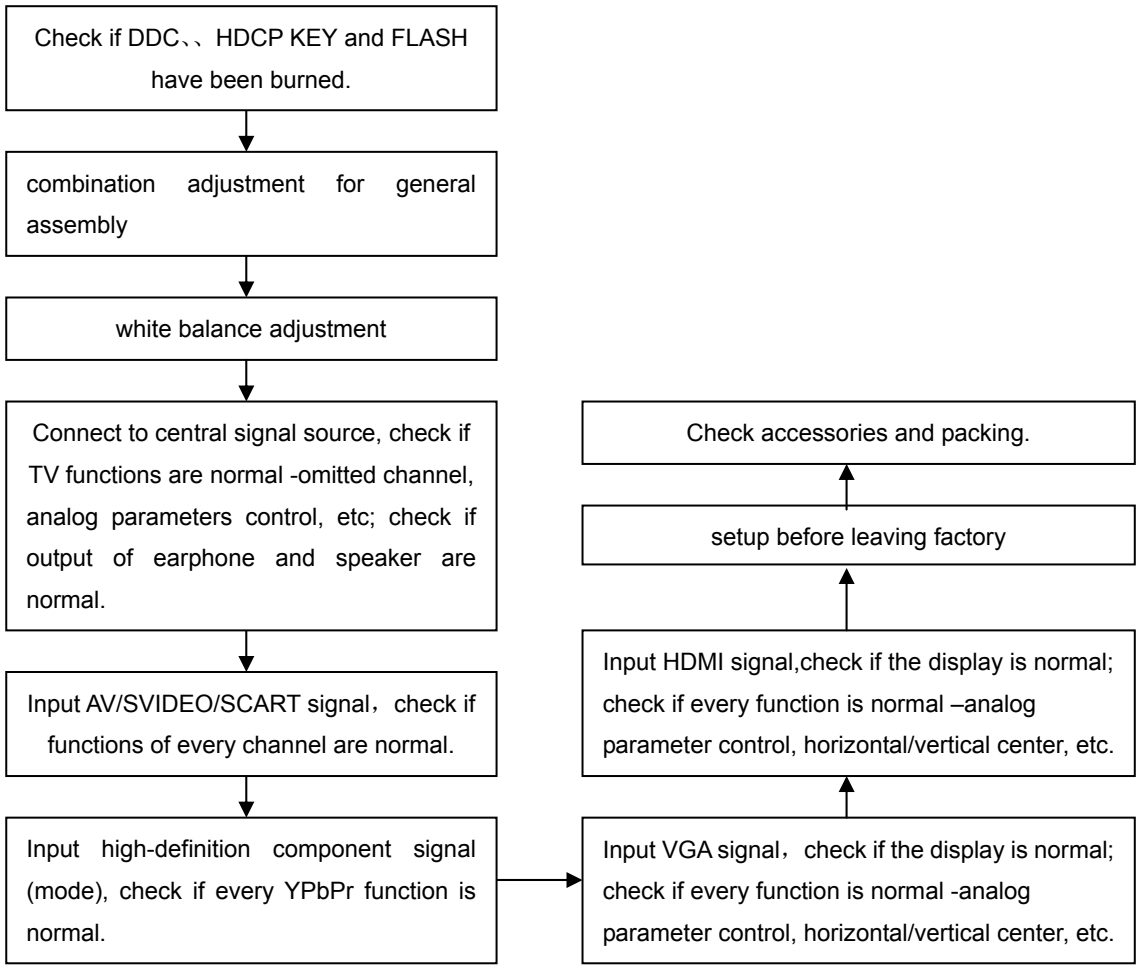

Fig.1 Adjustment flow chart

2 Alignment instruction

2.1 Unit adjustment

2.1.1 According to the wiring diagram “9232KE5601JL”, connect power board, digital board, SCART interface board, IR board, key board and side AV board correctly; then power on, check if the display is normal.

2.1.2 Using method of factory menu

a) First press key “**SOURCE**”，then press number key “**2、5、8、0**” in turn to enter into initial factory menu;

b) Press keys “CH+” and “CH−” can move cursor to each page of initial factory menu, then press key “**OK**” can enter into adjustment menu of each page;

c) Press keys “CH+” and “CH−” can move cursor upwards and downwards within one adjustment page;

d) Move cursor to one adjustment item, then press keys “VOL−” and “VOL+” can adjust it;

e) Press key “**MENU**” can exit adjustment menu of one page to its superior factory menu;

f) Press key “**EXIT**” can exit factory menu at any time;

g) Press key “**OK**” can enter into inferior factory menu;

h) Factory menu item "**ADC Calibrate"** is used to correct ADC of VGA and Component channel;

i) Factory menu item "**W/B ADJUST"** is used to adjust white balance;

j) Factory menu item "**POWER MODE**" is used to set power-on mode, "Standby" means the set will be in standby state after power-on; "MEM" means the set will be in the state before the last power-off; "ForceOn" means the set will be working automatically after power-on, this mode is also used for factory-machine-aging; default setting should be "Standby" mode unless specified by customer requirement;

k) Factory menu item "**ISP MODE**" is used to upgrade unit software from VGA port when the item is set as "ON" and the set is connected to ISP adjustment equipment; DDC function of VGA port will be recovered when the item is set as "OFF"; the value of the item can not be kept in the memory, that is to say the item is reset as "OFF" after power-on again;

l) Factory menu item "**RESET ALL"** is used to reset factory menu data and user menu data; after execute the item, the set will be started up again and the startup guided picture will be displayed;

m) Factory menu item "**FACTORY CHANNEL PRESET"** is used to preset factory programs data; it is necessary to connect to central signal source for DTV searching programs. Now digital frequency of central signal CH28(529.5 MHz) and CH33(564.5 MHz) are distributed to Australia programs. Primary preset programs would not be modified along with the changing of central signals, so please select item DTV in menu Channel to manual search digital programs, the process will spend about 15s;

n) Factory menu item "**CUSTOM CHANNEL PRESET"** : first delete all DTV/ATV programs for factory adjustment, then preset ATV channel data according to customer order requirements; please execute the item to clear out all programs for factory adjustment before leaving factory;

o) Factory menu item "**MST Debug**" :default setting "OFF" is used for engineering models whose RS232 functions can measure up to design specifications; setting "ON" is convenient for debugging by developing tools; the value of the item can not be kept in the memory, that is to say the item is reset as "OFF" after power-on again;

p) Factory menu item "**BACKLIGHT**" is used to adjust backlight brightness, adjust the item and test voltage of X802-2# (PWM) to measure up to the maximum PWM voltage in panel specification;

q) Factory menu item "**SSC ADJUST**" is used to adjust expended functions of frequency content, the software having been preset according to model need not be adjusted again;

r) Factory menu item "**AUDIO Curve**" is used to adjust audio curve; without special customer requirements, the software having been preset according to model need not be adjusted again;

If the software has been upgraded or EEPROM has data already, please execute item "RESET ALL" before adjustment for the first time.

2.1.3 ADC calibration

ADC calibration of VGA channel

a) Switch to VGA channel;

b) Press key "**SOURCE**", then press number keys "**2、5、8、0**" to enter into initial factory menu;

c) Move cursor to item "**ADC ADJUST**" and press key "**OK**" to enter into interior factory menu;

d) Input VGA signal (**VG-848 Timing:856(1024×768/60 Hz)，Pattern 920 Gray 8 step(H)**),

move cursor to item “**MODE**”，press keys “▲” and “▼” to select item “RGB”, then move cursor to item “**AUTO ADC**” and press key “OK” to begin adjustment automatically until adjustment completion.

ADC calibration of YPbPr channel

a) Switch to YPbPr channel;
b) Press key “**SOURCE**”，then press number keys “**2、5、8、0**” to enter into initial factory menu;
c) Move cursor to item “**ADC ADJUST**” and press key “**OK**” to enter into interior factory menu;
d) Input YPbPr signal (**VG848 Timing 972（1080i）,Pattern 918 SMPTE Color Bar**), move cursor to item “**MODE**”，press keys “▲” and “▼” to select item “**YPbPr（HD）**”, then move cursor to item “**AUTO ADC**” and press key “**ENTER**” to begin adjustment automatically, a prompt “**success**” displayed under “**AUTO ADC**” means auto-adjustment completed successfully;
e) Input YPbPr signal (**VG848 Timing 978（483P）,Pattern 918 SMPTE Color Bar**), move cursor to item “**MODE**”，press keys “▲” and “▼” to select item “**YPbPr（SD）**”, then move cursor to item “**AUTO ADC**” and press key “**ENTER**” to begin adjustment automatically, a prompt “**success**” displayed under “**AUTO ADC**” means auto-adjustment completed successfully;

2.2 White balance adjustment

Unless specified by customer, default COOL color temperature is **12000K**, chromaticity coordinates is （**272、278**）; default Normal color temperature is **9300K**, chromaticity coordinates is（**285、293**）; default Warm color temperature is **6500K**, chromaticity coordinates is （**313、329**）.

2.3 White balance adjustment processes

The set should be working above **30** minutes before white balance adjustment for it would be in a stabler state. Use white balance apparatus **CA-210** and switch to its **BBY** channel.

a) Switch to **HDMI** channel；
b) Press key “**SOURCE**”, then press number keys “**2、5、8、0**” in turn to enter into initial factory menu;
c) Move to item “**W/B ADJUST**” and press key “**OK**” to enter into interior factory menu;
d) Input **DVI/HDMI** signal （**VG-848 Timing: 856(1024×768/60 Hz)，Pattern:921 16 step Gray**）, move cursor to item “**MODE**”, press keys “▲” and “▼” to select item “**HDMI1**” or other HDMI channels, then move cursor to item “**TEMPERTURE**”, press keys “▲” and “▼” to select item “**COOL**”;
e) Adjust items “**R GAIN、G GAIN、B GAIN”** to set chromaticity coordinates of the **14th** step is （**272、278**）;
f) Adjust item “**R Offset、G Offset、B Offset**” to set chromaticity coordinates of the **4th** step is （**272、278**）;
g) During adjustment , make sure that color temperature of bright step is (**X=272±10 Y=278±10)** and color temperature of dark step is (**X=272±10 Y=278±10)**;
h) Then move cursor to item “**COPY ALL**” to copy white balance data to the other channels except DTV channel;
i) Check if color temperature of **HDMI NORMAL** and **WARM** meet requirements as below:
bright step: allowable error is **±10**, dark step: allowable error is **±10**;
otherwise adjust items “**R_GAIN /B_GAIN/R_OFF/B_OFF**” to meet requirements and then save data;

j) Switch to other channels **ATV, AV，COMPONENT and D-SUB** , check if color temperature of **COOL**，**NORMAL** and **WARM** meet requirements; otherwise adjust them respectively with **16 step Gray** signal and the same adjustment method as **HDMI** channel's; exit menu "**W/B ADJUST**" after adjustment and the data would be saved automatically;

k) DTV channel adjustment: switch to DTV channel, input **16 step Gray** signal, enter into factory menu, then begin adjustment followed by steps "e, f, g";

l) Adjustment rules for reference as below:

adjust **B** gun: adjust **B** gun value downwards , then coordinates of **X**、**Y** will rise;
adjust **B** gun value upwards , then coordinates of **X**、**Y** will descent;

adjust **R** gun will effect the coordinate of **X** , and effect the value of **Lv** a little:
adjust **R** gun value upwards , then coordinate of **X** will rise;
adjust **R** gun value downwards , then coordinate of **X** will descent;

adjust **G** gun will effect the coordinate of **Y** , and effect the value of **Lv** a lot:
adjust **G** gun value upwards , then coordinate of **Y** will rise;
adjust **G** gun value downwards , then coordinate of **Y** will descent;

note: default color temperature for **SANYO** customer is **Normal**; change to picture mode **Dynamic**, adjust chromaticity coordinates of color temperature **Normal** and **Cool**;
only adjust chromaticity coordinates of color temperature **Cool** for other customers when picture mode is **Dynamic**.

3 Performance check

3.1 **TV** functions

Connect **RF** port to central signal source, first enter into menu **CHANNEL**, then search programs automatically, check if there is any omitted program, check if the output of speakers is normal, check if the picture is normal.

3.2 **AV/S-Video** port

Input **AV/S-Video** signal respectively, check if the picture, the sound and other functions are normal;

3.3 **SCART** port

Input signal to **SCART** port, check if the picture, the sound and other functions are normal;
Switch to **TV** channel, check if the picture, the sound and other functions of **SCART OUT** channel are normal;

3.4 **YPbPr/YCbCr** port

Input **YUV** signal from signal generator **VG-848** with **YUV** formats as **Table 4** respectively, check if the display and the sound are normal under the circumstances of power-on/off, switching channel, switching signal format, etc.

Table 4 **YUV** receiving signal formats

No.	Definition	Horizontal frequency （kHz）	Vertical frequenvy （Hz）	Dot-pulse frequency （MHz）	Remark
1	720×480	15.734	60	13.5	480i (NTSC)
2	720×480	15.734	59.94	13.5	480i (NTSC)
3	720×576	15.625	50	13.5	576i (PAL)

4	720×480	31.469	60	27	480p (NTSC PROG)
5	720×480	31.469	59.94	27	480p (NTSC PROG)
6	720×576	31.25	50	27	576p (PAL PROG)
7	1280×720	45	59.94	74.18	720p (59p)
8	1280×720	45	60	74.25	720p (60p)
9	1280×720	37.5	50	74.25	720p (50p)
10	1920×1080	33.75	59.94	74.25	1080i (59i)
11	1920×1080	33.75	60	74.25	1080i (60i)
12	1920×1080	28.125	50	74.25	1080i (50i)
13	1920×1080	67.5	59.94	148.35	1080p (59p)
14	1920×1080	67.5	60	148.5	1080p (60p)
15	1920×1080	56.25	50	148.5	1080p (50p)
16	1920×1080	-	23.94/24	-	-
17	1920×1080	-	25	-	-
18	1920×1080	-	29.97/30	-	-

3.5 **VGA** port

Input **VGA** signal from signal generator **VG-848** with **VGA** formats as **Table 5** respectively, check if the display and the sound are normal; if there is any deviation of line or field, enter into **main** menu, select and execute items "**Picture->Screen->Auto Adjusting**" in turn to correct them automatically.

Table 5 VGA receiving signal formats

No.	Definition	Horizontal frequency （kHz）	Vertical frequenvy （Hz）	Dot-pulse frequency （MHz）	Remark
1	640×480	31.469	59.94	25.175	IBM
2	720×400	31.469	70.086	28.322	IBM
3	640×480	37.861	72.809	31.5	VESA
4	640×480	37.5	75	31.5	VESA
5	800×600	35.156	56.25	36	VESA
6	800×600	37.879	60.317	40	VESA
7	800×600	48.077	72.188	50	VESA
8	800×600	46.875	75	49.5	VESA
9	1024×768	48.363	60.004	65	VESA
10	1024×768	56.476	70.069	75	VESA
11	1024×768	60.023	75.029	78.75	VESA
12	1152×864	67.5	75	108	VESA
13	1280×960	60	60	108	VESA
14	1280×1024	63.98	60.02	108	VESA
15	1280×1024	80	75	135	SXGA
16	1440×900	-	60	-	-
17	1680×1050	-	60	-	-
18	1360×768	47.7	60	85.5	-

3.6 **HDMI** port

Input **HDMI** signal from signal generator **VG-849** with the formats as **Table 4** and **Table 5** respectively, check if the display and the sound（**32 KHz、44.1 KHz、48 KHz**）are normal under the circumstances of power-on/off, switching channel, switching signal format, etc.

3.7 Other functions check

a) Check if the functions are normal —timing turn-on/off、turn-off of sleeping time、picture/sound mode、OSD、stereo and digital audio interface, etc.;
b) Check if audio only digital programs (**RADIO**) are normal;
c) For **UK** models, check if **MHEG** function of digital programs are normal;
d) Check if common interface（**CI：Common Interface**）is normal;
e) For **New Zealand** models, check if function of logic channel number (**LCN**) is normal, check if function of **Over Air Download**（**OAD**）is normal;
f) For **France**, **UK** and **Italy** models, check if function of logic channel number (**LCN**) is normal.

4 User menu setup before leaving factory

Enter into page **"LOCK**" of user menu, select submenu item "**Restore Factory Default**" to preset items before leaving factory as below:

a) Clear out all programs information;
b) Clear out information of parental control (**VCHIP**);
c) Default setup of user analog data;
d) Set Menu Language as **English**;
e) Set Power on MODE as **Off**.

5 Instruction of factory software burning as **Table 6**

Table 6 Instruction of factory software burning

No.	Part No.	Part type	Instruction of software function	Burned before SMT	Burning method
N111	5276405001	MX25L6405DMI-12G	FLASH	Yes	burned with program **ALL100**, write-protect setup, refer to **Note 1** in detail
N108	5272404002	AT24C04	HDMI KEY	Yes	burned with program **ALL100**
NA04	5272402002	AT24C02	HDMI EDID	Yes	burned with program **ALL100**
NA05	5272402002	AT24C02	HDMI EDID	Yes	burned with program **ALL100**
NA06	5272402002	AT24C02	HDMI EDID (supporting the3rd HDMI)	Yes	burned with program **ALL100**
N106	5272402002	AT24C02	VGA EDID	Yes	burned with program **ALL100**

Note 1: Write-protect setup method

Enter into burning interface of program **ALL-100**, select item "**Config**", press item "**config Setting"**, set item "**Protect**" as "**All Protect**"; be sure to select item "**Config**" before burning software, and write-protect must be re-set after burning program **ALL-100** startup every time.

Note 2: Burning and upgrading software method with burning tool **ISP**

1） Main board upgrading: connect **4-core** line of burning tool **ISP** to Debug port（location No. **X807**） of main board;

Unit upgrading: connect both **VGA** ports between burning tool **ISP** and main board, then enter into factory menu and set item **"ISP Mode**" as "**ON"**;

2） Use on-line burning tool of **Mstar**, enter into menu "**Device**", select item "**WP Pin pull to high during ISP**" as **Fig. 2**; for the normal erasing process, make sure hardware write-protect of **Flash** is canceled;

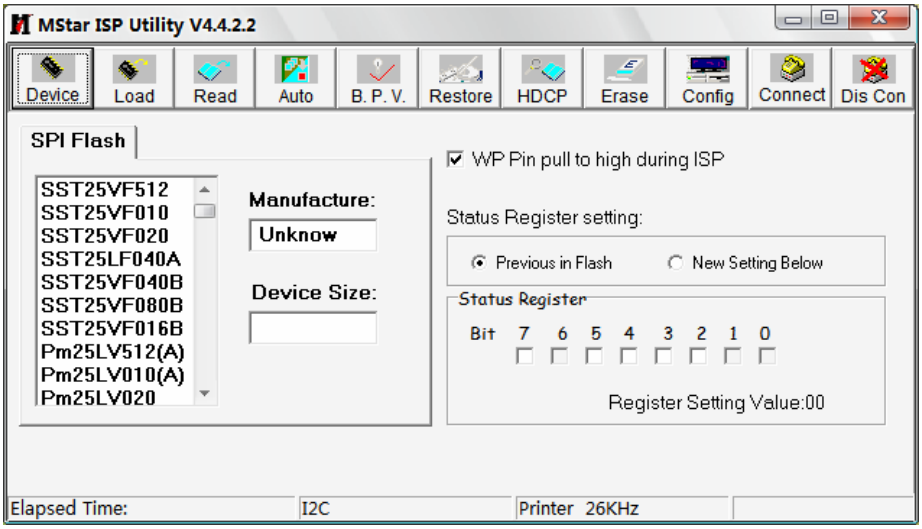

Fig. 2 Write-protect setup

3) Select menu "**Connect**", a dialog "**Device Type is MX25L64**" will be displayed as **Fig. 3** , that is to say connecting is successful;

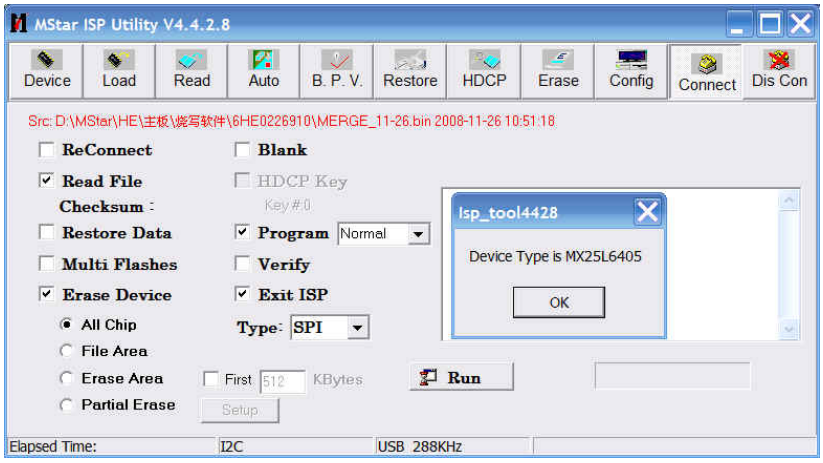

Fig. 3 Device **MX25L64** successful connection

If failing to connecting, select the first menu "**Device**" and select item "**MX25L64**" manually, then press key "**Connect**".

4) Press key “**Read**”，select burning file (for example **MERGE.bin**) as **Fig. 4.**

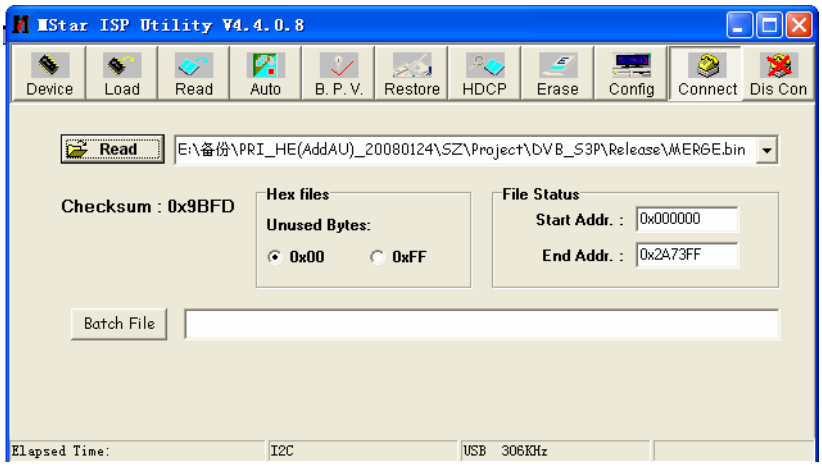

Fig. 4 Burning file

5) Select menu “**Auto**”, then select items “**All chip**”, “**program**” and other configuration as **Fig. 5**

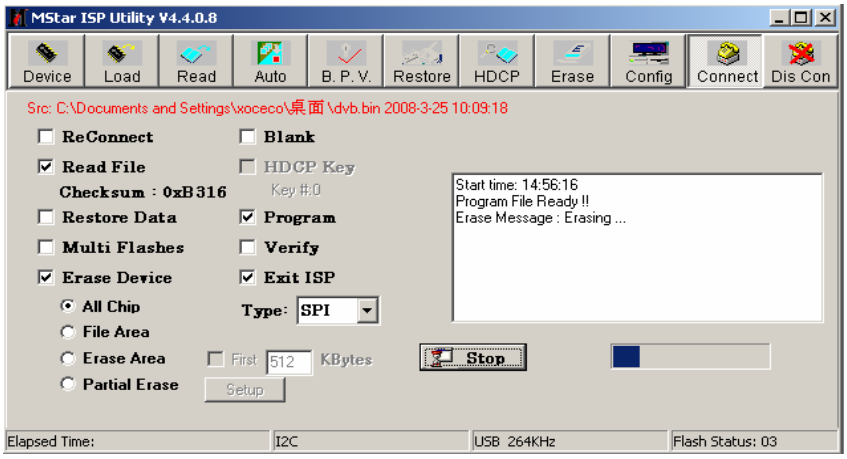

Fig. 5 Burning Configuration

6) Press key “**Run**” as **Fig. 4** to begin burning software, there are two steps for the process: **Erase** and **Program**

normal burning steps are as follows:

the first step “**Erasing…，Flash Status: 03**” will be lasting for a moment, otherwise skipping over means unsuccessful erasing; please confirm process （**2**） and then burn software again;

the following step “**Programming…，Flash Status:00**” will be done until a prompt “**Pass**” is displayed.

7) A prompt “**Pass**” will be displayed beside the key “**Run**” for successful burning as **Fig. 6**

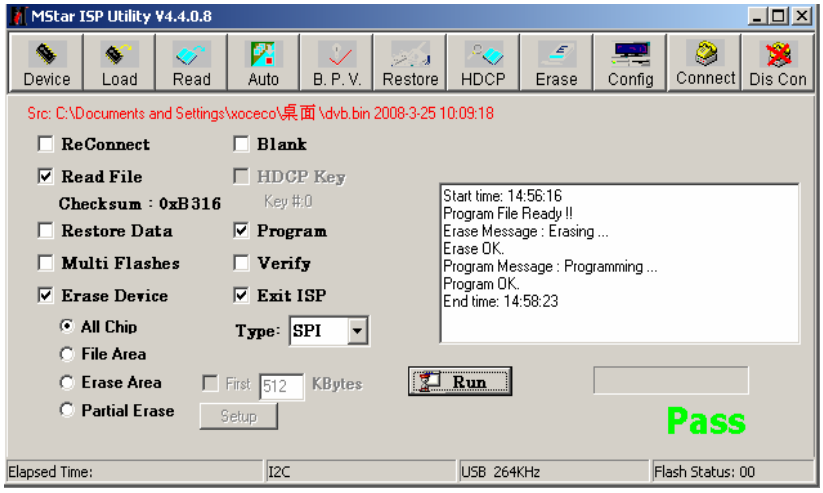

Fig. 6 A prompt “**Pass**” beside the key “**Run**” for successful burning

8) Need not exit **ISP** burning interface and only repeat the process **3**）and **5**）to go on burning software for other sets.

Note 3: On-line burning and upgrading method from **USB** port

1）Be sure to format a U disk as **FAT32**;

2）Copy program file to the U disk with the name “**Merge.bin**”;

3）Power on, be sure to switch to **ATV** or **DTV** channel and not to display **OSD** interface; insert the U disk into a **USB** port, then **USB** upgrading process will begin automatically;

4）Upgrading processes:

A、Reading data from the U disk:

A prompt “Searching USB” is displayed and an indicating light of U disk is twinkling;

B、Burning Flash:

A prompt “Updating! Please don’t power off!!!” is displayed and an indicating bar is showing upgrading schedule; the set will be in Standby mode after the burning process completed;

5）Start up the set again, enter into factory menu to verify software version and time parameters; then execute item “**RESET ALL**” to complete the whole burning process.

*** Method of burning from **USB** could not be sure to be suitable for all kinds of U disks, so please try other U disks if necessary.

Working principle analysis of the unit

1、 PAL/SECAM signal flow

PAL/SECAM signal from antenna is inputted into TUNER **FQD1116** which is an analog-digital-integrative model, the analog RF signal is demodulated by the TUNER, then **CVBS** signal and SIF(sound intermediate frequency) signal are outputted. TUNER **FQD1116** is controlled by main chip **MSD209**（with embedded CPU) through **I2C** bus.

TV CVBS signal is inputted into main chip **MSD209** directly to be processed by modules "**VIDEO DECODER**、**DEINTERLACE** and **SCALER**", then **LVDS** signal is outputted to drive LCD panel.

SIF audio signal is inputted into main chip **MSD209** directly and processed by modules of demodulation, pre-amplification, acoustic effect processing and volume control, then the audio signal are inputted into left and right sound tracks of earphone amplifier **BH3547F** to be amplified and then are divided to two signals, one is outputted to earphone jack, the other is inputted into class D audio power amplifier **R2A15112** to be amplified and then be outputted to speakers.

2、 DVB-T signal flow

DVB-T signal from antenna is inputted into TUNER **FQD1116** to be tuned, **RF** amplified, **IF** amplified and **SAW FILTER** inside, then **IF** signal is outputted to demodulating chip **CE6353** to be demodulated and then be inputted into main chip **MSD209** with format of standard serial or parallel **TS** stream for demultiplexing and decoding.

Video route: demultiplexed video signal is decoded by main chip **MSD209** and then digital video signal is outputted; in the end **LVDS** signal is outputted to drive **LCD** panel after a series of digital processes and **OSD** addition within main chip **MSD209**.

Audio route: demultiplexed audio signal is decoded into **Dolby AC-3** signal or **MPEG** multi-sound-track digital audio signal by inner decoder of main chip **MSD209**, then one is outputted through **SPDIF** directly; after the process of "sub-transform and **DAC**", the other is outputted as analog audio signal, the analog audio signal is inputted into the rear part of main chip **MSD209** for acoustic effect processing and volume control, then inputted into left and right sound tracks of earphone amplifier **BH3547F** respectively to be amplified, now the audio signal is divided into two, one is outputted to earphone jack directly, the other is inputted into class D audio power amplifier **R2A15112** to be amplified and then outputted to speakers.

3、 AV signal flow

After processed by impedance matching, **AV** video signal is inputted into main chip **MSD209** directly and processed by modules of "**VIDEO DECODER**、**DEINTERLACE** and **SCALER**", then **LVDS** signal is outputted to drive **LCD** panel.

AV audio signal is processed by circuits of "voltage divided, impedance matching and AC coupling", then inputted into main chip **MSD209** directlyfor acoustic effect processing and volume control, then inputted into left and right sound tracks of earphone amplifier **BH3547F** respectively to be

amplified, now the audio signal is divided into two, one is outputted to earphone jack directly, the other is inputted into class D audio power amplifier **R2A15112** to be amplified and then outputted to speakers.

4、 **PC/YPbPr** signal flow

After processed by impedance matching, **PC/YPbPr** video signal is inputted into main chip **MSD209** to be processed by modules of "**A/D** transform, digital video processing and **OSD** addition", then **LVDS** signal is outputted to drive **LCD** panel.

PC/YPbPr audio signal is processed by circuits of "voltage divided, impedance matching and AC coupling", then inputted into main chip **MSD209** directly for acoustic effect processing and volume control, afterwards the audio signal is inputted into left and right sound tracks of earphone amplifier **BH3547F** directly to be amplified, now the audio signal is divided into two, one is outputted to earphone jack directly, the other is inputted into class D audio power amplifier **R2A15112** to be amplified and then outputted to speakers.

5、 **HDMI** signal flow

HDMI video signal is inputted into main chip **MSD209** to be processed by modules of "digital video processing and **OSD** addition", then **LVDS** signal is outputted to drive **LCD** panel.

HDMI audio signal is decoded into **Dolby AC-3** signal or **MPEG** multi-sound-track digital audio signal by inner decoder of main chip **MSD209**, then one is outputted through **SPDIF** directly; after the process of "sub-transform and **DAC**", the other is outputted as analog audio signal, the analog audio signal is inputted into the rear part of main chip **MSD209** for acoustic effect processing and volume control, then inputted into left and right sound tracks of earphone amplifier **BH3547F** respectively to be amplified, now the audio signal is divided into two, one is outputted to earphone jack directly, the other is inputted into class D audio power amplifier **R2A15112** to be amplified and then outputted to speakers.

6、 Brief instruction on unit functions

MPEG-2 MP@HL、H.264 Main and High profile up to Leve4.0 Decoding
MPEG、Dolby Digital（AC-3）、AAC Digital Audio Decoding
3D comb filter
Wide-range power supply、low consumed power in standby mode（≤1W）
Class D audio power amplifier with HI-FI acoustic effect output
High quality transformation from interleaved scanning to progressive scanning
Realizing integrative functions really
- build integration
- integrative TUNER（integrating analog with digital）
- integrative searching-program function
- integrative OSD interface

Main parts of the unit：
32 inch LCD panel（1366X768）

Main chip：MStar MSD209FG-LF
Demodulating chip：Intel CE6353
TUNER：NXP FQD1116ME/IV
DDR：SAMSUNG K4T51163QC-HCF7
Class D audio power amplifier：RENESAS R2A15112
FLASH ：MX25L6405DMI-12G

External ports of the unit:

Two groups of Video input and RCA L/R input
One group of S-VIDEO input
Two groups of HDMI input
One group of VGA input
One group of audio input for VGA and DVI（Mini Phone Jack）
One group of YPBPR input and RCA L/R input
One group of RF
One group of RS232（Mini Phone Jack）
One group of audio output（Mini Phone Jack）
One group of Video output and RCA L/R output
One group of SPDIF（coaxial）output
One group of USB（for upgrading）

Block diagram

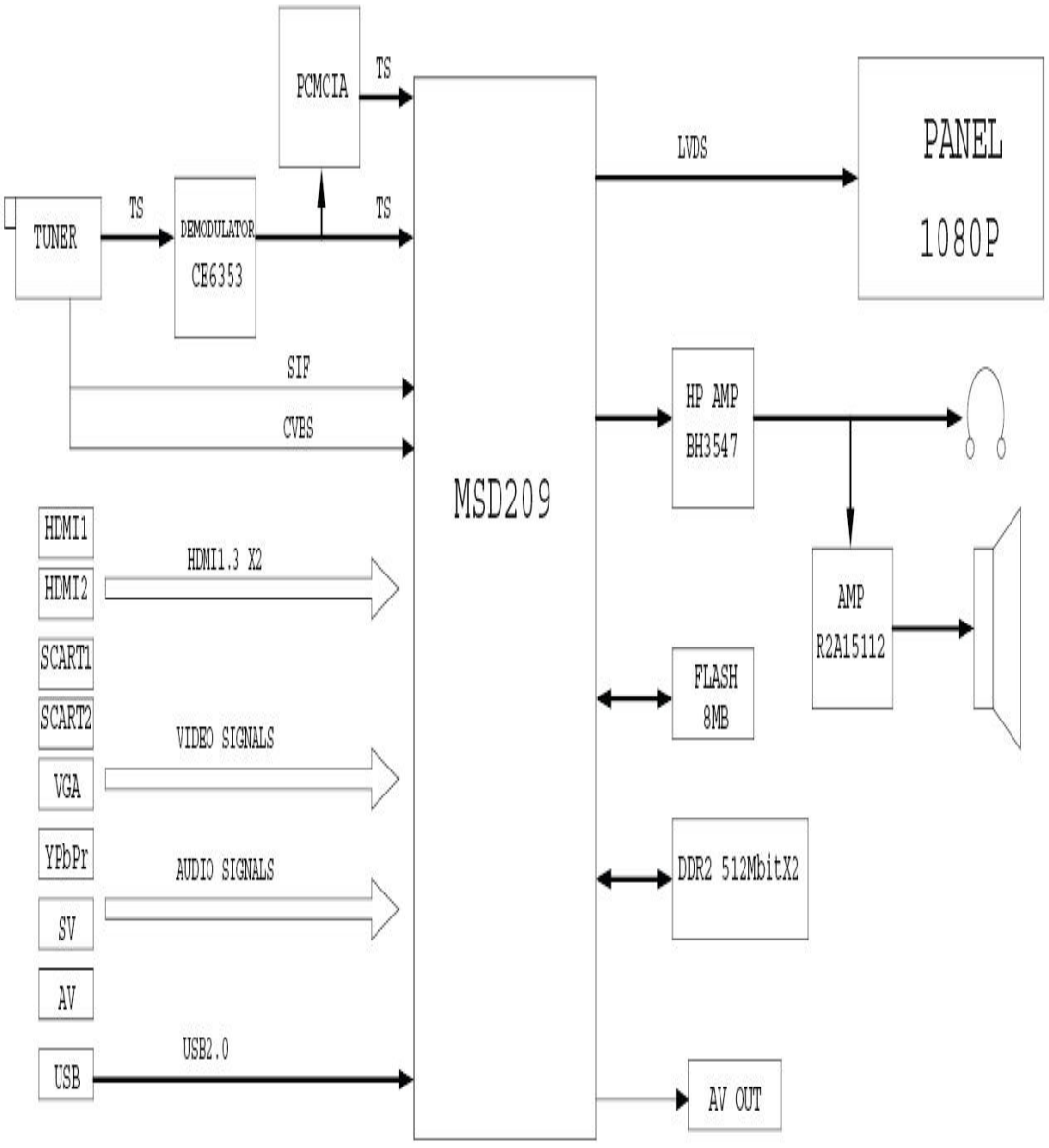

IC block diagram and instruction

1、 Main chip **MSD209FG-LF:**

GENERAL DESCRIPTION

The MSD209FG is a highly integrated controller IC for LCD/PDP DTV applications with resolutions up to full-HD (1920 x 1080). It is configured with an integrated triple-ADC/PLL, a multi-standard TV video and audio decoder, a motion adaptive video de-interlacer, a scaling engine, the MStarACE-3 color engine, an advanced 2D graphics engine, a transport processor, a high-definition (HD) MPEG video decoder, a 24-bit DSP for MPEG audio decoding, a DVI/HDCP/HDMI receiver, and a peripheral control unit providing a variety of HDTV control functions.

For digital TV application, the MSD209FG comprises an MPEG-2 transport processor with advanced section filtering capability, an MPEG-2 (MP@HL profile) video decoder, an MPEG layer I and II digital audio decoder with analog audio outputs that are designed to support existing and future DVB-T programs while handling conditional access. Furthermore, it is also possible to decode MPEG-4, JPEG, MP3 formats from external sources such as USB interfaces.

For analog TV, the MSD209FG includes NTSC/PAL/SECAM multi-standard video decoder comprising a 3-D motion adaptive comb filter and time-based correction, and a NICAM/A2 audio decoder to support worldwide television standards. The MSD209FG is also configured with a VBI processor to decode digital information such as Close Caption / V-chip / teletext / WSS / CGMS-A / VPS. In addition, the MStar advanced LCD TV processor enhances video quality, motion adaptive de-interlacer, picture quality adjustment units, and MStarACE-3 color engine.

By integrating peripherals including two USB 2.0 host controllers, UARTs, IR, SPI, I2C, and PWM, the MSD209FG fulfills all requirements in advanced DTV sets. To further reduce system costs, the MSD209FG also integrates intelligent power management control capability for green-mode requirements and spread-spectrum support for EMI management.

MSD209FG Features：

. Analog RGB Compliant Input Ports

˙ Three analog ports support up to 1080P

˙ Supports PC RGB input up to SXGA@75Hz

˙ Supports HDTV RGB/YPbPr/YCbCr

˙ Supports Composite Sync and SOG (Sync-on-Green) separator

˙ Automatic color calibration

. VIF Input Support

˙ Multi-standard analog TV receiver applications

˙ Digital low IF architecture

- Stepped-gain PGA with 25 dB tuning range and 1 dB tuning resolution
- Maximum IF gain of 37 dB
- Programmable TOP to accommodate different tuner gain to optimize noise and linearity performance

. DVI/HDCP/HDMI Compliant Input Port

- Three DVI/HDCP/HDMI input ports support up to 225MHz @ 1080P 60Hz with 12-bit deep-color resolution
- Single link on-chip DVI 1.0 compliant receiver
- High-bandwidth Digital Content Protection (HDCP) 1.1 compliant receiver
- High Definition Multimedia Interface (HDMI) 1.3 compliant receiver with CEC (Consumer Electronics Control) support
- Long-cable tolerant robust receiving

. High-Performance Scaling Engine

- Fully Programmable shrink/zoom capabilities
- Nonlinear video scaling supports various modes including Panorama

. Auto-Configuration/Auto-Detection

- Auto input signal format and mode detection
- Auto-tuning function including phasing, positioning, offset, gain, and jitter detection
- Sync Detection for H/V Sync

. Video Processing & Conversion

- 3-D motion adaptive video de-interlacers with edge-oriented adaptive algorithm for smooth low-angle edges
- Automatic 3:2 pull-down & 2:2 pull-down detection and recovery
- MStar 3rd Generation Advanced Color Engine (MStarACE-3) automatic picture enhancement gives:
- Brilliant and fresh color
- Intensified contrast and details
- Vivid skin tone
- Sharp edge
- Enhanced depth of field perception
- Accurate and independent color control
- sRGB compliance allows end-user to experience the same colors as viewed on CRTs and other displays
- 10-bit internal data processing
- Programmable 12-bit RGB gamma CLUT
- 3-D video noise reduction
- MPEG artifact removal including de-blocking and mosquito noise reduction
- Frame rate conversion
- MFC (Motion Frame Conversion) supports:
- Judder-free motion video
- Output frame rate 50/60/100/120 f/sec
- Up to 60Hz full HD or 120Hz HD panels

. Output Interface

˜ Supports up to 10-bit dual LVDS full-HD (1920 x 1080) panel interface
˜ Supports 2 data output formats: Thine & TI data mappings
˜ Compatible with TIA/EIA
˜ With 6/8 bits optional dithered output
˜ Spread spectrum output frequency for EMI suppression
. CVBS Video Output
˜ Supports two CVBS bypass output ports
. 2D Graphics Engine
˜ Point draw, line draw, rectangle draw/fill and text draw
˜ BitBlt and stretch BitBlt
˜ Raster Operation (ROP)
. Miscellaneous
˜ DRAM controller to support up to 32-bit DDR2 interface
˜ Supports Common Interface for conditional access
˜ SPI bus for external flash
˜ Two ports of USB 2.0 host controller with the flexibility for connecting external storage devices
˜ 375-ball LFBGA package
˜ Operating at 1.26V (core), 1.9V (DDR2), and 3.3V (I/O and analog)

2、 Digital demodulating chip **CE6353**

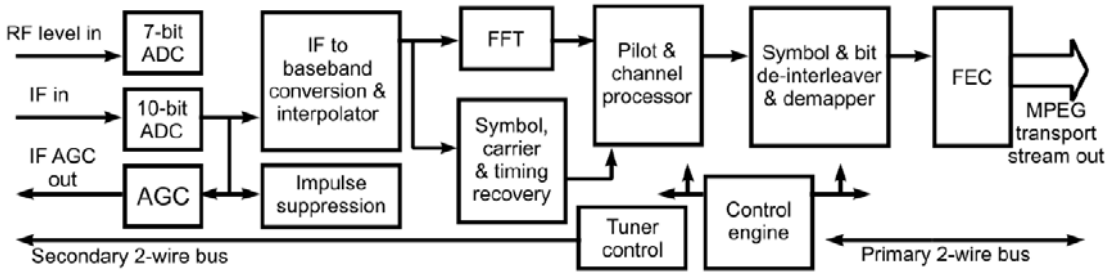

The chip comprises 8MHz bandwidth SAW and supports demodulation of 6MHz, 7MHz and 8MHz, 2K/8K carrier and supports both serial and parallel TS stream output.

3、 Audio power amplifier **RENESAS R2A15112**

R2A15112FP is a Digital Power Amplifier IC developed for TV.
R2A15112FP has a maximum power of 15W(typ) × 2ch.
(VD = 24V,THD = 1%, SE) at a 4 Ω load.
It is possible to replace a conventional analog amplifier with a digital amplifier easily.

●Maximum power out put (No external heat sink)
(note) These apply when the thermal pad is soldered to the printed-circuit board directly.
Recommended Power Condition
SE operation mode :15Wx2ch(VD=24V,4Ω load,THD+N:1%）
BTL operation mode:30Wx1ch(VD=21V,8Ω load,THD+N:10%）
●Highly efficient, low noise, and low distortion
●Popless
●Built-in protection - Overcurrent, overheat, and undervoltage
●Built-in Mute and Standby function
●The gain can be changed to four settings by two terminals.

●Power supply voltage : 11V to 25V
●Speaker Impedance : from 4 to 8Ω

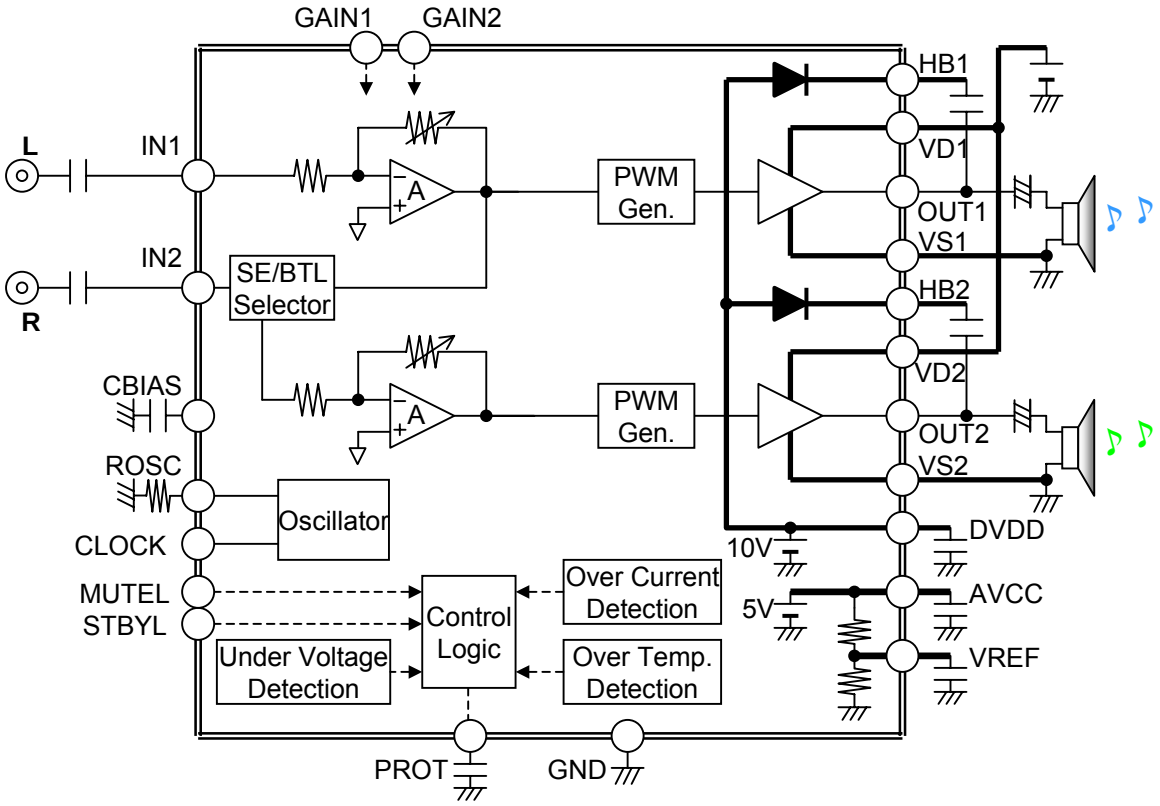

4、 Tuner：**FQD1116ME/IV**

The FQD1116 belongs to the new family of highly-featured hybrid frontends, which are designed to meet a wide range of RF applications. The FQD1116 combines the functions of a DVB-T digital tuner and a multi-standard TV IF demodulation unit for both positive and negative modulated TV systems. The unit includes a 7 MHz digital SAW filter with an IF AGC amplifier for connection to the DVB-T channel decoder. The FQD1116 is intended for CCIR L/L' (France), B/G, I and D/K systems and DVB-T broadcast.

The frontends have a built-in digital (I2C) PLL tuning system. A DC-DC converter circuit is built into the FQD1116 to synthesize the tuning voltage required, thus making the frontend a true 5V device.

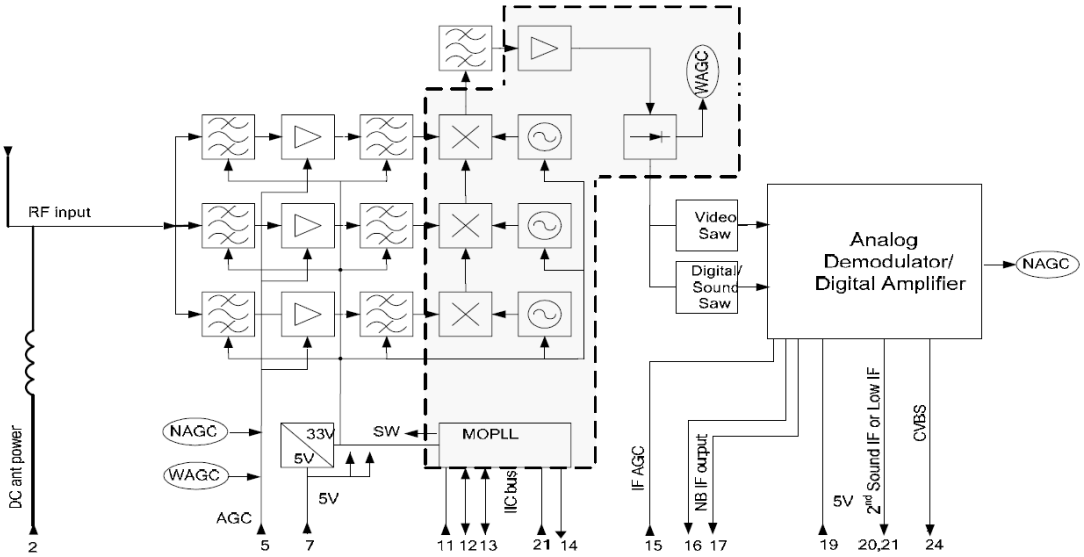

WIRING DIAGRAM

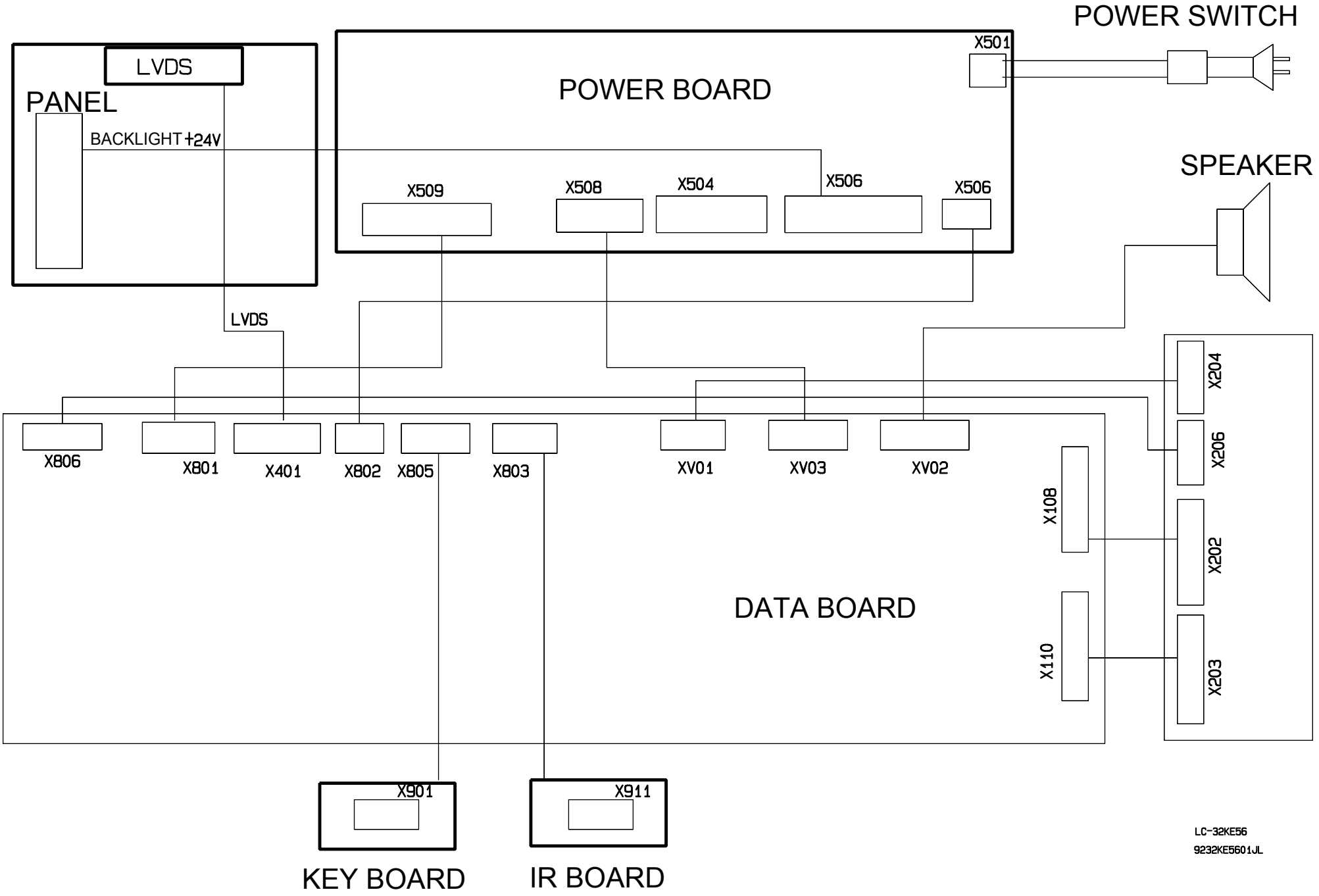

Troubleshooting guide LC-32KE56

1. Panel is dark.

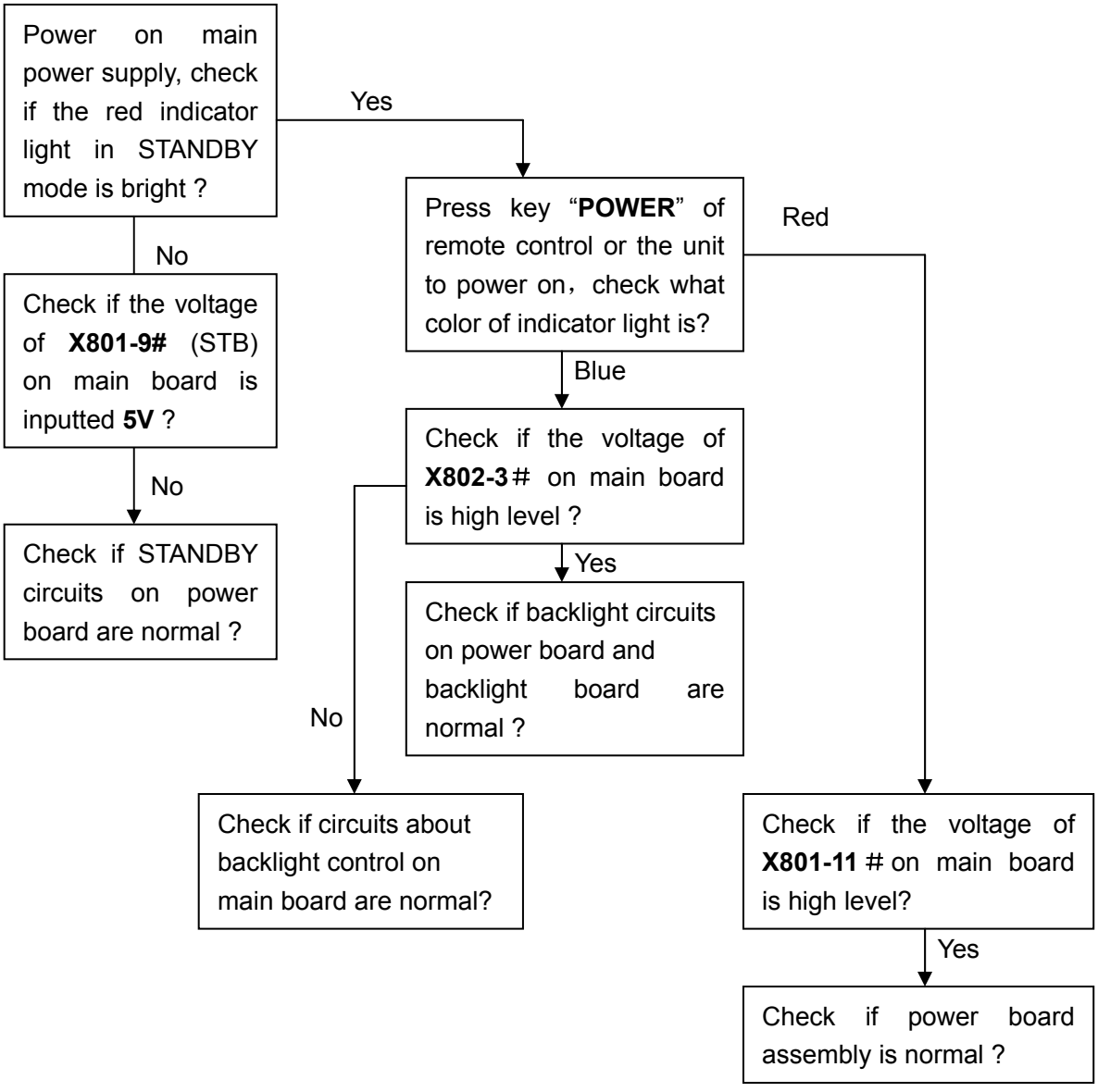

2．Backlight is normal, but there is no picture

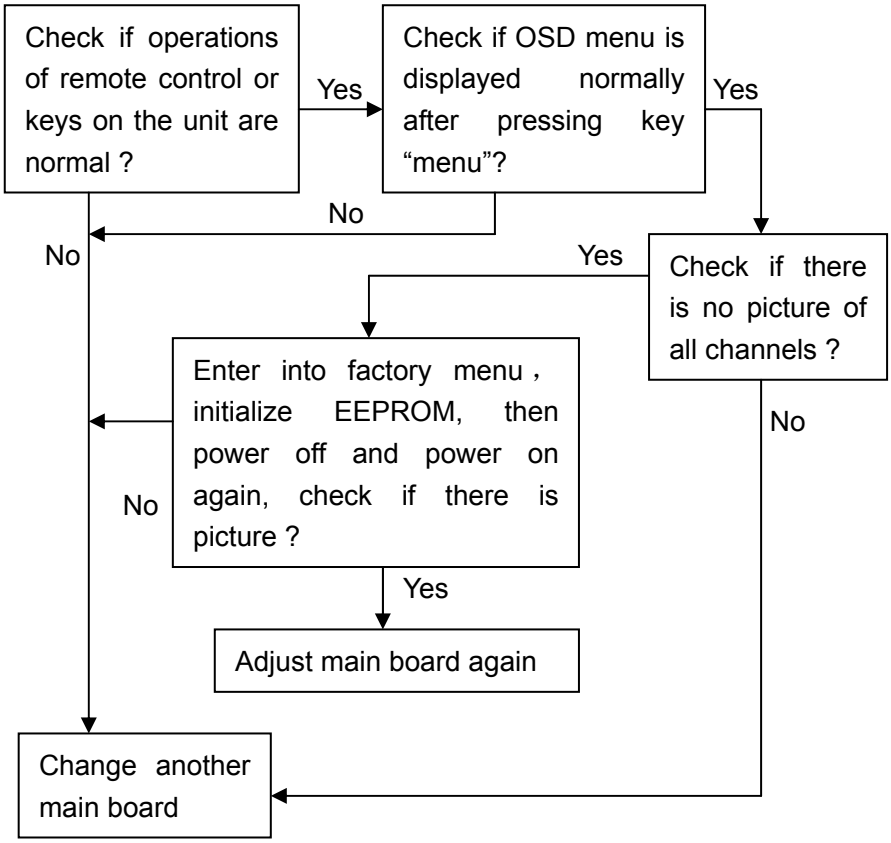

3．There is picture but no sound.

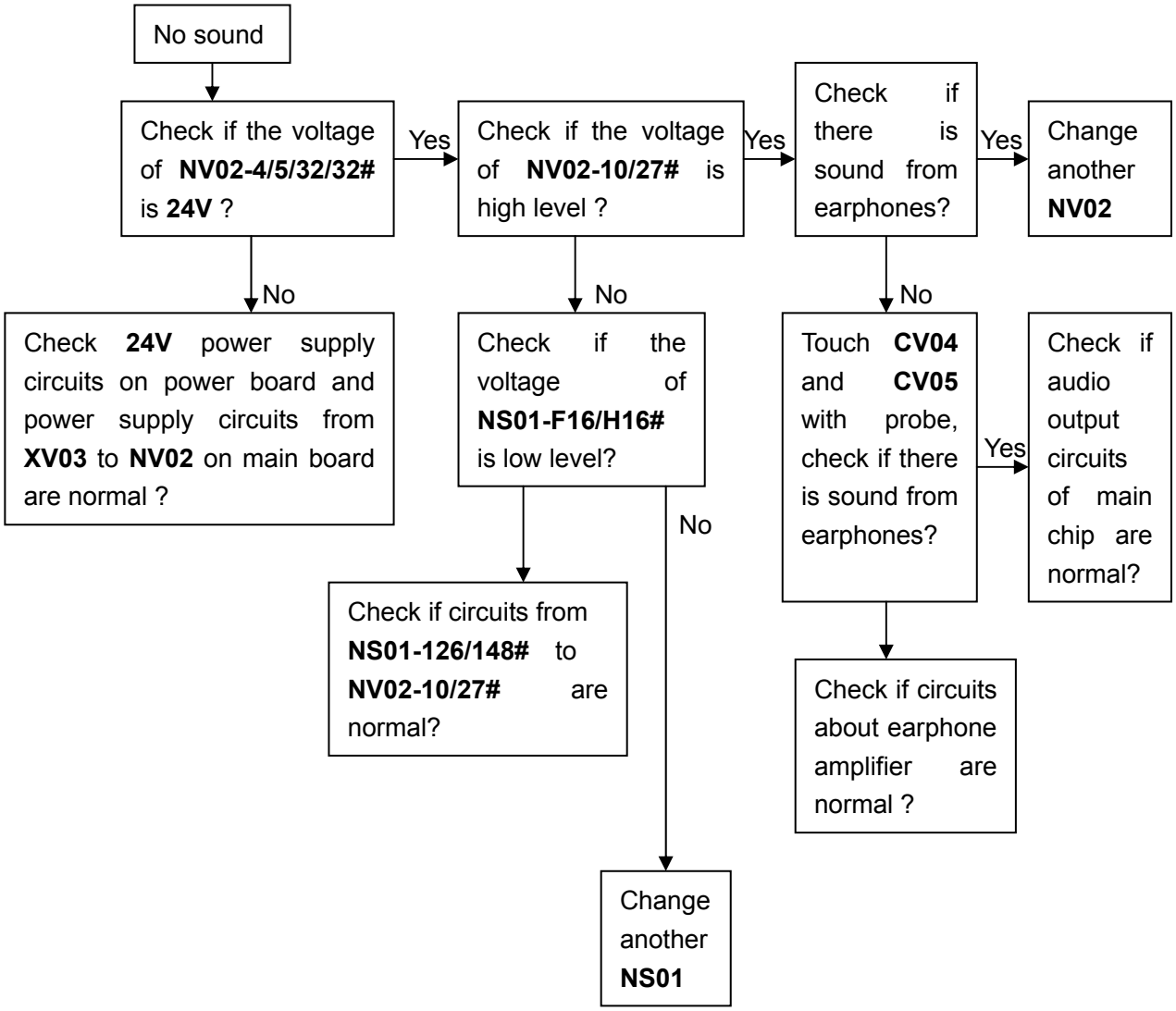

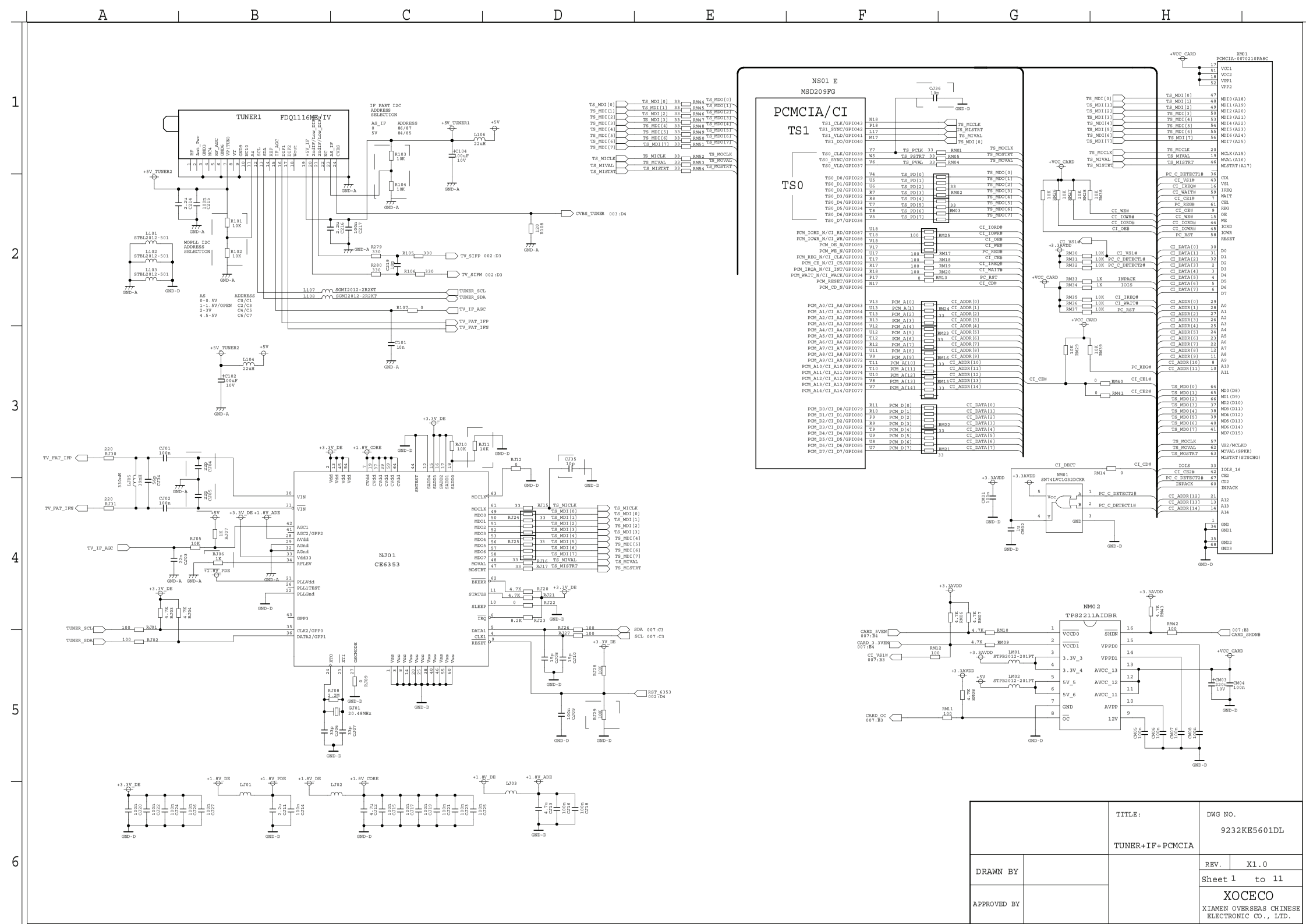
TUNER1 FDQ1116MF/IV
NS01 E
MSD209FG
PCMCIA/CI
TS1
TS0
XM01
PCMCIA-0070210PA8C
NJ01
CE6353
NM01
SN74LVC1G32DCKR
NM02
TPS2211AIDBR
TUNER+IF+PCMCIA
DRAWN BY
APPROVED BY
DWG NO.
9232KE5601DL
REV. X1.0
Sheet 1 to 11
XOCECO
XIAMEN OVERSEAS CHINESE ELECTRONIC CO., LTD.

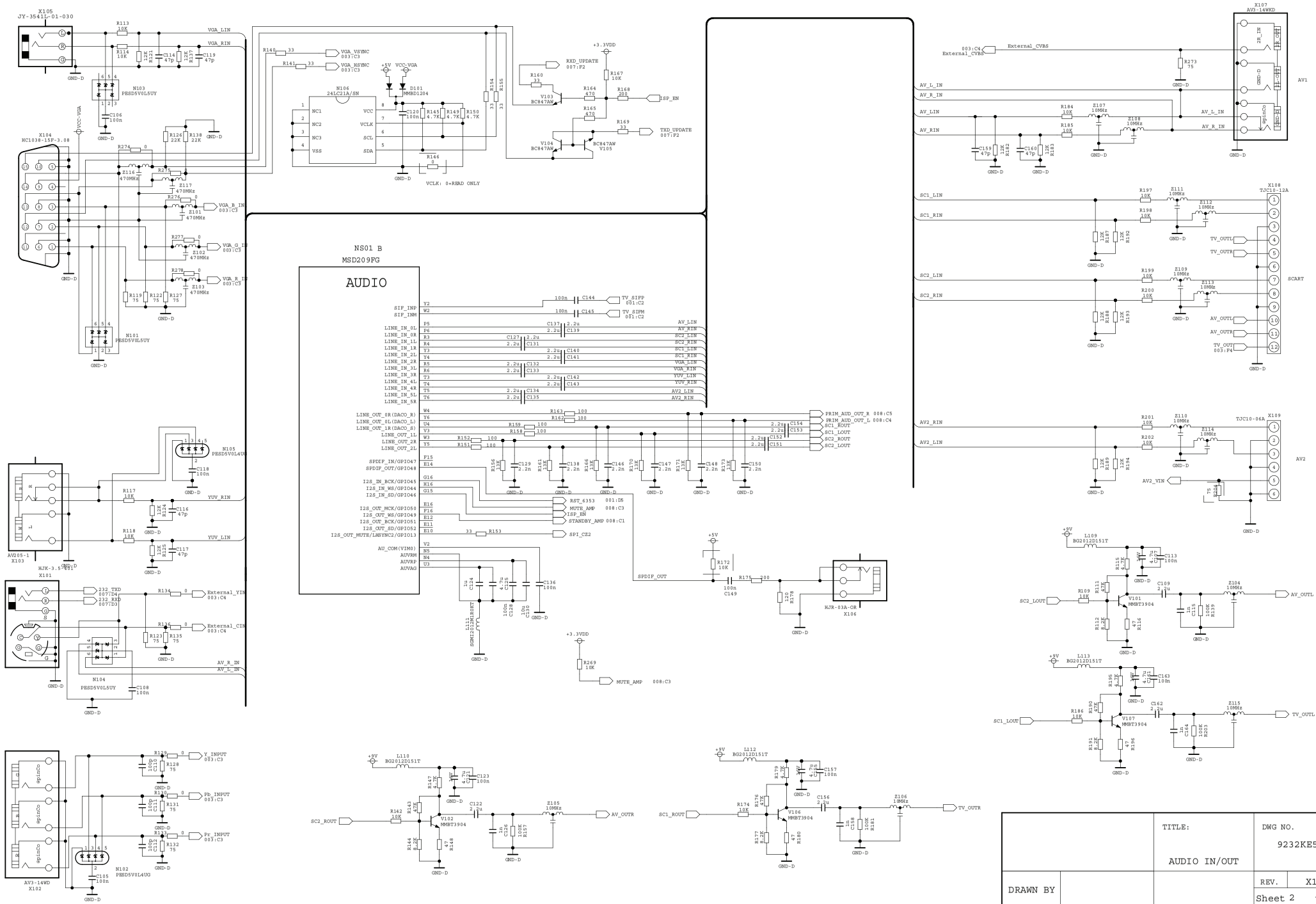
NS01 B
MSD209FG
AUDIO
X105
JY-3541L-01-030
X104
HC1038-15P-3.08
X107
AV3-14WKD
AV1
X108
TJC10-12A
SCART
X109
TJC10-06A
AV2
X101
X102
AV3-14WD
X103
AV205-1
HJK-3.5
X106
HJR-03A-OR
N101
PESD5V0L5UY
N102
PESD5V0L4UG
N103
PESD5V0L5UY
N104
PESD5V0L5UY
N105
PESD5V0L4UY
N106
24LC21A/8N
D101
MMBD1204
V101
MMBT3904
V102
MMBT3904
V103
BC847AW
V104
BC847AW
V105
BC847AW
V106
MMBT3904
V107
MMBT3904
VGA_LIN
VGA_RIN
VGA_B_IN 003:C3
VGA_G_IN 003:C3
VGA_R_IN 003:C3
VGA_VSYNC 003:C3
VGA_HSYNC 003:C3
VCC-VGA
VCLK: 0=READ ONLY
RXD_UPDATE 007:P2
TXD_UPDATE 007:P2
ISP_EN
232_TXD 007:D4
232_RXD 007:D3
External_VIN 003:C4
External_CIN 003:C4
Y_INPUT 003:C3
Pb_INPUT 003:C3
Pr_INPUT 003:C3
External_CVBS 003:C4
TV_SIPP 001:C2
TV_SIPM 001:C2
PRIM_AUD_OUT_R 008:C5
PRIM_AUD_OUT_L 008:C4
RST_6353 001:D5
MUTE_AMP 008:C3
ISP_EN
STANDBY_AMP 008:C1
SPI_CZ2
MUTE_AMP 008:C3
SPDIF_OUT
AV_OUTL
AV_OUTR
TV_OUTL
TV_OUTR
SC1_LOUT
SC2_LOUT
SC1_ROUT
SC2_ROUT
AV_L_IN
AV_R_IN
AV2_VIN
AV_OUTL
AV_OUTR
TV_OUTL
TV_OUTR
SC1_LIN
SC1_RIN
SC2_LIN
SC2_RIN
AV2_LIN
AV2_RIN
YUV_LIN
YUV_RIN
VGA_LIN
VGA_RIN
SIF_INP
SIF_INM
LINE_IN_0L
LINE_IN_0R
LINE_IN_1L
LINE_IN_1R
LINE_IN_2L
LINE_IN_2R
LINE_IN_3L
LINE_IN_3R
LINE_IN_4L
LINE_IN_4R
LINE_IN_5L
LINE_IN_5R
LINE_OUT_0R(DACO_R)
LINE_OUT_0L(DACO_L)
LINE_OUT_1R(DACO_S)
LINE_OUT_1L
LINE_OUT_2R
LINE_OUT_2L
SPDIF_IN/GPIO47
SPDIF_OUT/GPIO48
I2S_IN_BCK/GPIO45
I2S_IN_WS/GPIO44
I2S_IN_SD/GPIO46
I2S_OUT_MCK/GPIO50
I2S_OUT_WS/GPIO49
I2S_OUT_BCK/GPIO51
I2S_OUT_SD/GPIO52
I2S_OUT_MUTE/LHSYNC2/GPIO13
AU_COM(VIMO)
AUVRM
AUVRP
AUVAG
TITLE:
AUDIO IN/OUT
DWG NO.
9232KE5601DL
REV.
X1.0
DRAWN BY
APPROVED BY
Sheet 2 to 11
XOCECO
XIAMEN OVERSEAS CHINESE ELECTRONIC CO., LTD.

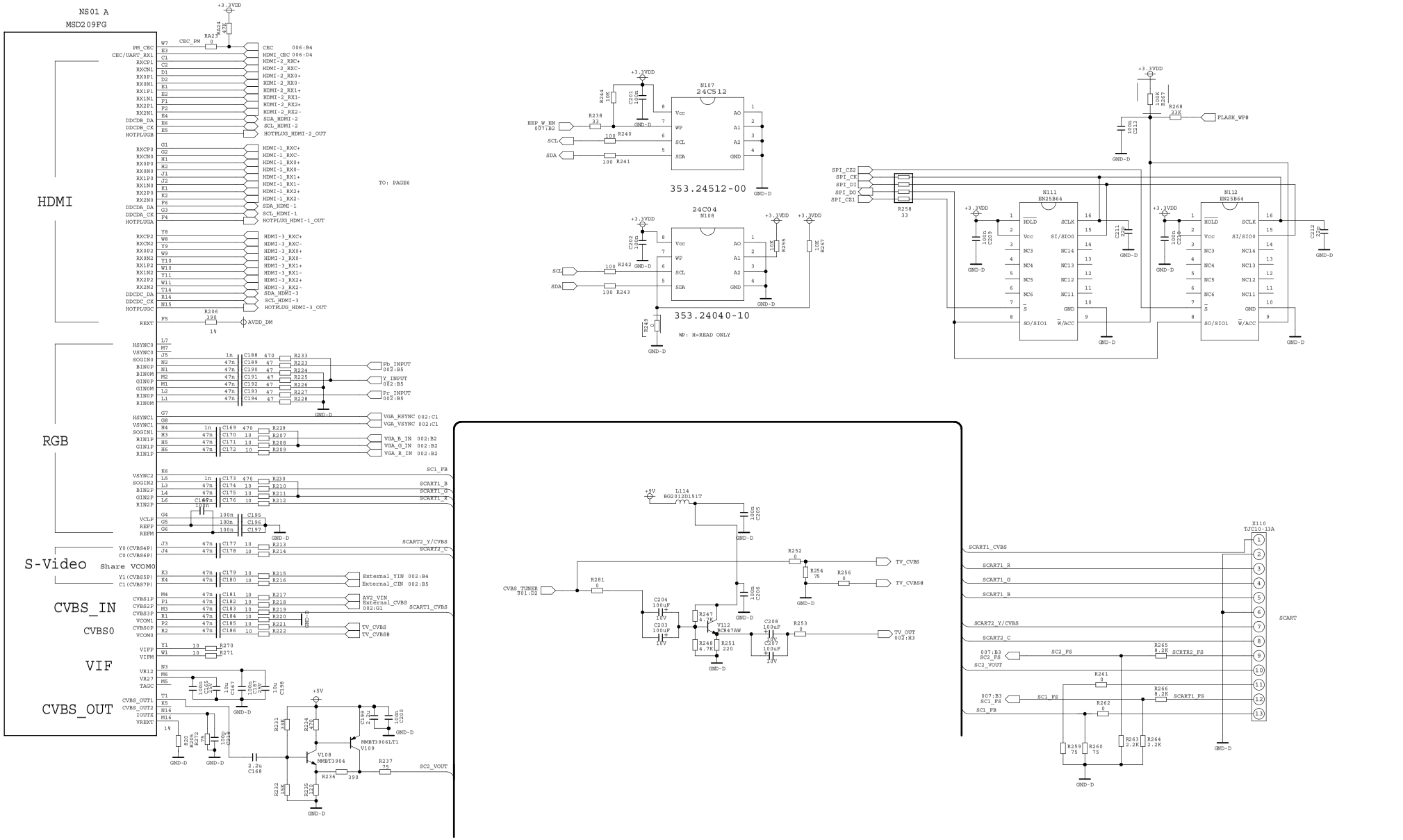

		TITLE: VIDEO IN/OUT	DWG NO. 9232KE5601DL
DRAWN BY			REV. X1.0
APPROVED BY			Sheet 3 to 11
			XOCECO XIAMEN OVERSEAS CHINESE ELECTRONIC CO., LTD.

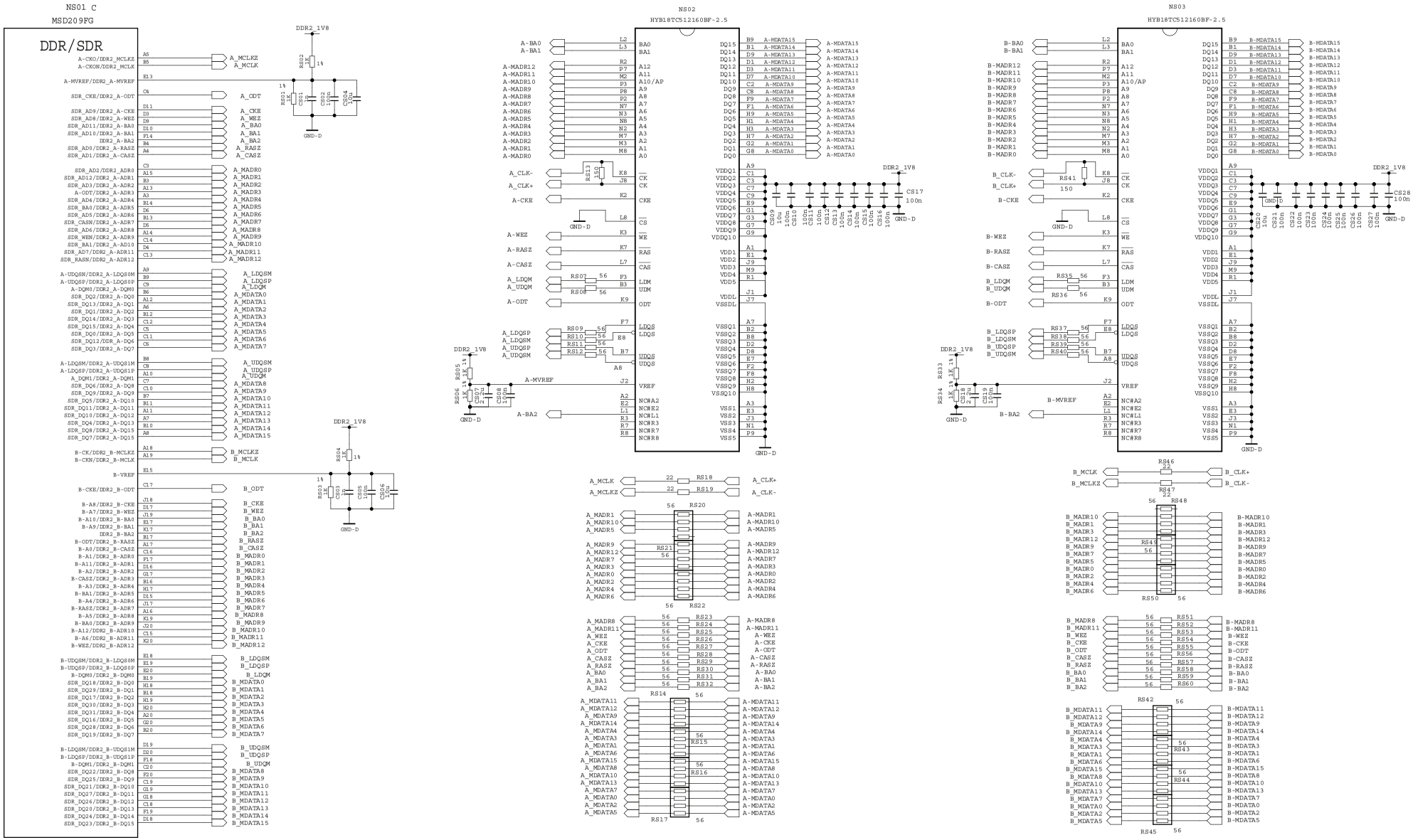
NS01 C
MSD209FG
DDR/SDR
NS02
HYB18TC512160BF-2.5
NS03
HYB18TC512160BF-2.5
DDR2_1V8
GND-D
A_MCLKZ
A_MCLK
A_ODT
A_CKE
A_BA0
A_BA1
A_BA2
A_RASZ
A_CASZ
A_WEZ
A_MADR0
A_MADR1
A_MADR2
A_MADR3
A_MADR4
A_MADR5
A_MADR6
A_MADR7
A_MADR8
A_MADR9
A_MADR10
A_MADR11
A_MADR12
A_LDQSM
A_LDQSP
A_LDQM
A_UDQSM
A_UDQSP
A_UDQM
A_MDATA0
A_MDATA1
A_MDATA2
A_MDATA3
A_MDATA4
A_MDATA5
A_MDATA6
A_MDATA7
A_MDATA8
A_MDATA9
A_MDATA10
A_MDATA11
A_MDATA12
A_MDATA13
A_MDATA14
A_MDATA15
B_MCLKZ
B_MCLK
B_ODT
B_CKE
B_WEZ
B_BA0
B_BA1
B_BA2
B_RASZ
B_CASZ
B_MADR0
B_MADR1
B_MADR2
B_MADR3
B_MADR4
B_MADR5
B_MADR6
B_MADR7
B_MADR8
B_MADR9
B_MADR10
B_MADR11
B_MADR12
B_LDQSM
B_LDQSP
B_LDQM
B_UDQSM
B_UDQSP
B_UDQM
B_MDATA0
B_MDATA1
B_MDATA2
B_MDATA3
B_MDATA4
B_MDATA5
B_MDATA6
B_MDATA7
B_MDATA8
B_MDATA9
B_MDATA10
B_MDATA11
B_MDATA12
B_MDATA13
B_MDATA14
B_MDATA15
A-MVREF/DDR2_A-MVREF
B-VREF
A-CKO/DDR2_MCLKZ
A-CKON/DDR2_MCLK
B-CK/DDR2_B-MCLKZ
B-CKN/DDR2_B-MCLK
SDR_CKE/DDR2_A-ODT
B-CKE/DDR2_B-ODT
SDR_AD9/DDR2_A-CKE
SDR_AD8/DDR2_A-WEZ
SDR_AD11/DDR2_A-BA0
SDR_AD10/DDR2_A-BA1
SDR_AD0/DDR2_A-RASZ
SDR_AD1/DDR2_A-CASZ
SDR_AD2/DDR2_ADR0
SDR_AD12/DDR2_A-ADR1
SDR_AD3/DDR2_A-ADR2
A-ODT/DDR2_A-ADR3
SDR_AD4/DDR2_A-ADR4
SDR_BA0/DDR2_A-ADR5
SDR_AD5/DDR2_A-ADR6
SDR_CASN/DDR2_A-ADR7
SDR_AD6/DDR2_A-ADR8
SDR_WEN/DDR2_A-ADR9
SDR_BA1/DDR2_A-ADR10
SDR_AD7/DDR2_A-ADR11
SDR_RASN/DDR2_A-ADR12
A-UDQSM/DDR2_A-LDQS0M
A-UDQSP/DDR2_A-LDQS0P
A-DQM0/DDR2_A-DQM0
SDR_DQ13/DDR2_A-DQ1
SDR_DQ1/DDR2_A-DQ2
SDR_DQ14/DDR2_A-DQ3
SDR_DQ15/DDR2_A-DQ4
SDR_DQ0/DDR2_A-DQ5
SDR_DQ12/DDR2_A-DQ6
SDR_DQ3/DDR2_A-DQ7
A-LDQSM/DDR2_A-UDQS1M
A-LDQSP/DDR2_A-UDQS1P
A_DQM1/DDR2_A-DQM1
SDR_DQ6/DDR2_A-DQ8
SDR_DQ9/DDR2_A-DQ9
SDR_DQ5/DDR2_A-DQ10
SDR_DQ11/DDR2_A-DQ11
SDR_DQ10/DDR2_A-DQ12
SDR_DQ4/DDR2_A-DQ13
SDR_DQ8/DDR2_A-DQ15
SDR_DQ7/DDR2_A-DQ15
B-UDQSM/DDR2_B-LDQS0M
B-UDQSP/DDR2_B-LDQS0P
B-DQM0/DDR2_B-DQM0
SDR_DQ18/DDR2_B-DQ0
SDR_DQ29/DDR2_B-DQ1
SDR_DQ17/DDR2_B-DQ2
SDR_DQ30/DDR2_B-DQ3
SDR_DQ31/DDR2_B-DQ4
SDR_DQ16/DDR2_B-DQ5
SDR_DQ28/DDR2_B-DQ6
SDR_DQ19/DDR2_B-DQ7
B-LDQSM/DDR2_B-UDQS1M
B-LDQSP/DDR2_B-UDQS1P
B-DQM1/DDR2_B-DQM1
SDR_DQ22/DDR2_B-DQ8
SDR_DQ25/DDR2_B-DQ9
SDR_DQ21/DDR2_B-DQ10
SDR_DQ27/DDR2_B-DQ11
SDR_DQ26/DDR2_B-DQ12
SDR_DQ20/DDR2_B-DQ13
SDR_DQ24/DDR2_B-DQ14
SDR_DQ23/DDR2_B-DQ15
A-MADR12
A-MADR11
A-MADR10
A-MADR9
A-MADR8
A-MADR7
A-MADR6
A-MADR5
A-MADR4
A-MADR3
A-MADR2
A-MADR1
A-MADR0
A-BA0
A-BA1
A-BA2
A-CLK-
A-CLK+
A-CKE
A-WEZ
A-RASZ
A-CASZ
A-LDQM
A-UDQM
A-ODT
A-LDQSP
A-LDQSM
A-UDQSP
A-UDQSM
A-MVREF
B-MADR12
B-MADR11
B-MADR10
B-MADR9
B-MADR8
B-MADR7
B-MADR6
B-MADR5
B-MADR4
B-MADR3
B-MADR2
B-MADR1
B-MADR0
B-BA0
B-BA1
B-BA2
B-CLK-
B-CLK+
B-CKE
B-WEZ
B-RASZ
B-CASZ
B-LDQM
B-UDQM
B-ODT
B-LDQSP
B-LDQSM
B-UDQSP
B-UDQSM
B-MVREF
RS01 1K
RS02 1K
RS03 1K
RS04 1K
RS05 1K
RS06 1K
RS07 56
RS08 56
RS09 56
RS10 56
RS11 56
RS12 56
RS13 150
RS14 56
RS15 56
RS16 56
RS17 56
RS18 22
RS19 22
RS20 56
RS21 56
RS22 56
RS23 56
RS24 56
RS25 56
RS26 56
RS27 56
RS28 56
RS29 56
RS30 56
RS31 56
RS32 56
RS33 1K
RS34 1K
RS35 56
RS36 56
RS37 56
RS38 56
RS39 56
RS40 56
RS41 150
RS42 56
RS43 56
RS44 56
RS45 56
RS46 22
RS47 22
RS48 56
RS49 56
RS50 56
RS51 56
RS52 56
RS53 56
RS54 56
RS55 56
RS56 56
RS57 56
RS58 56
RS59 56
RS60 56
CS01 1K
CS02 100n
CS03 100n
CS04 100n
CS05 100n
CS06 100n
CS07 2.2n
CS08 100n
CS09 100n
CS10 100n
CS11 100n
CS12 100n
CS13 100n
CS14 100n
CS15 100n
CS16 100n
CS17 100n
CS18 2.2n
CS19 100n
CS20 10u
CS21 100n
CS22 100n
CS23 100n
CS24 100n
CS25 100n
CS26 100n
CS27 100n
CS28 100n
GND
DRAWN BY
APPROVED BY
TITLE:
DDR2 MEMORY
DWG NO.
9232KE5601DL
REV.
X1.0
Sheet 4 to 11
XOCECO
XIAMEN OVERSEAS CHINESE ELECTRONIC CO., LTD.

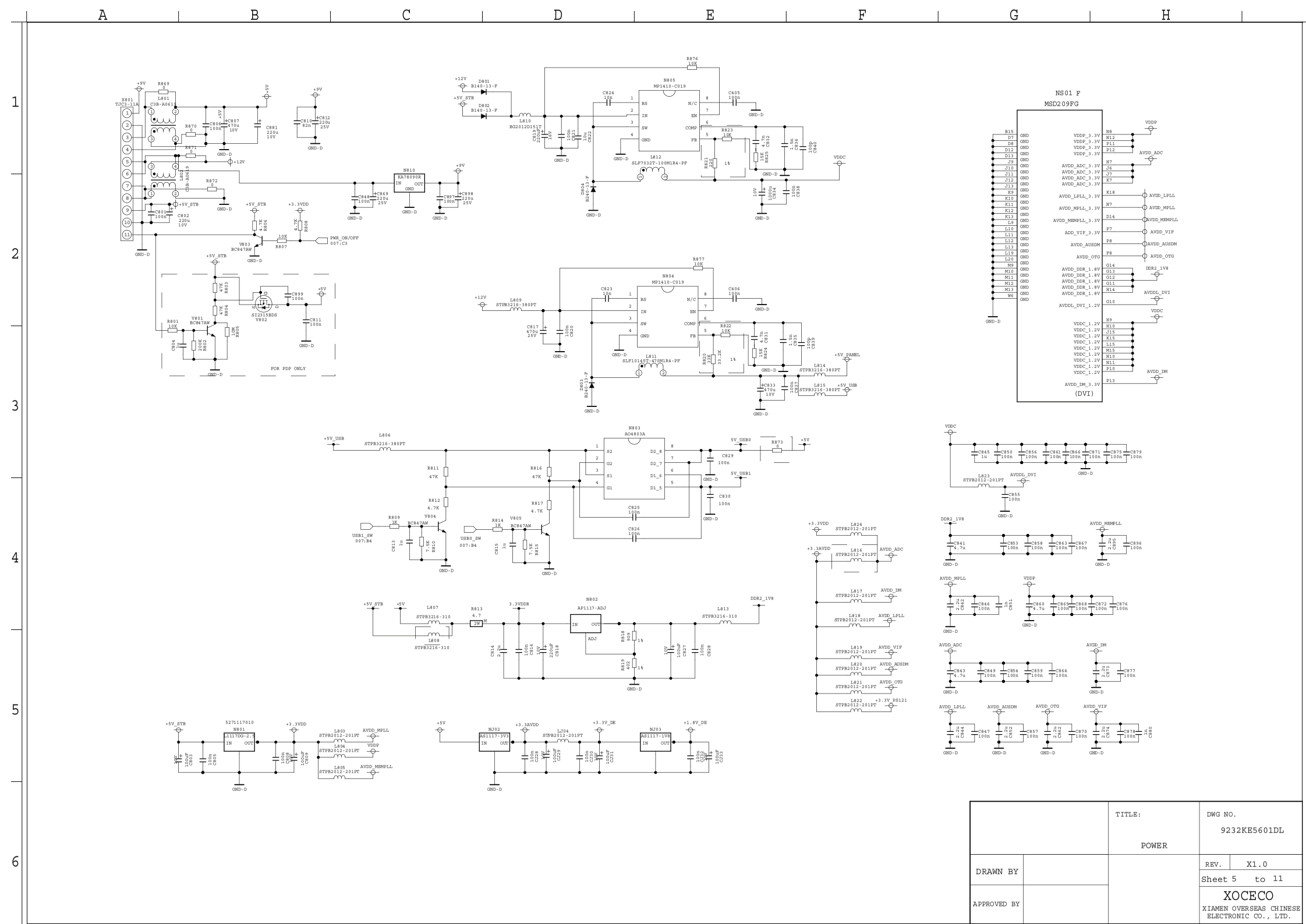

	TITLE: POWER	DWG NO. 9232KE5601DL
DRAWN BY		REV. X1.0
APPROVED BY		Sheet 5 to 11
		XOCECO XIAMEN OVERSEAS CHINESE ELECTRONIC CO., LTD.

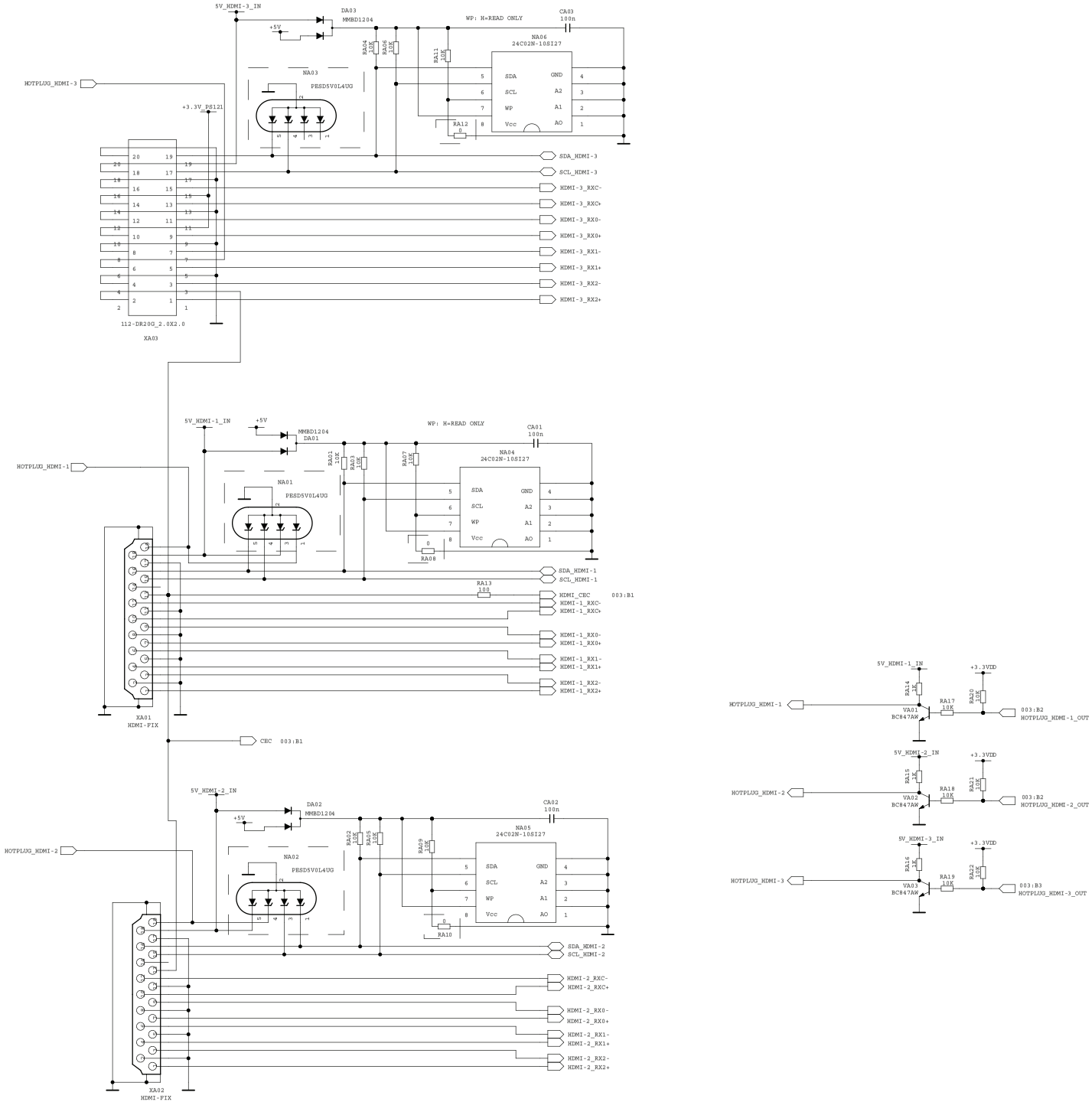

		TITLE: HDMI	DWG NO. 9232KE5601DL
DRAWN BY			REV. X1.0
APPROVED BY			Sheet 6 to 11
			XOCECO XIAMEN OVERSEAS CHINESE ELECTRONIC CO., LTD.

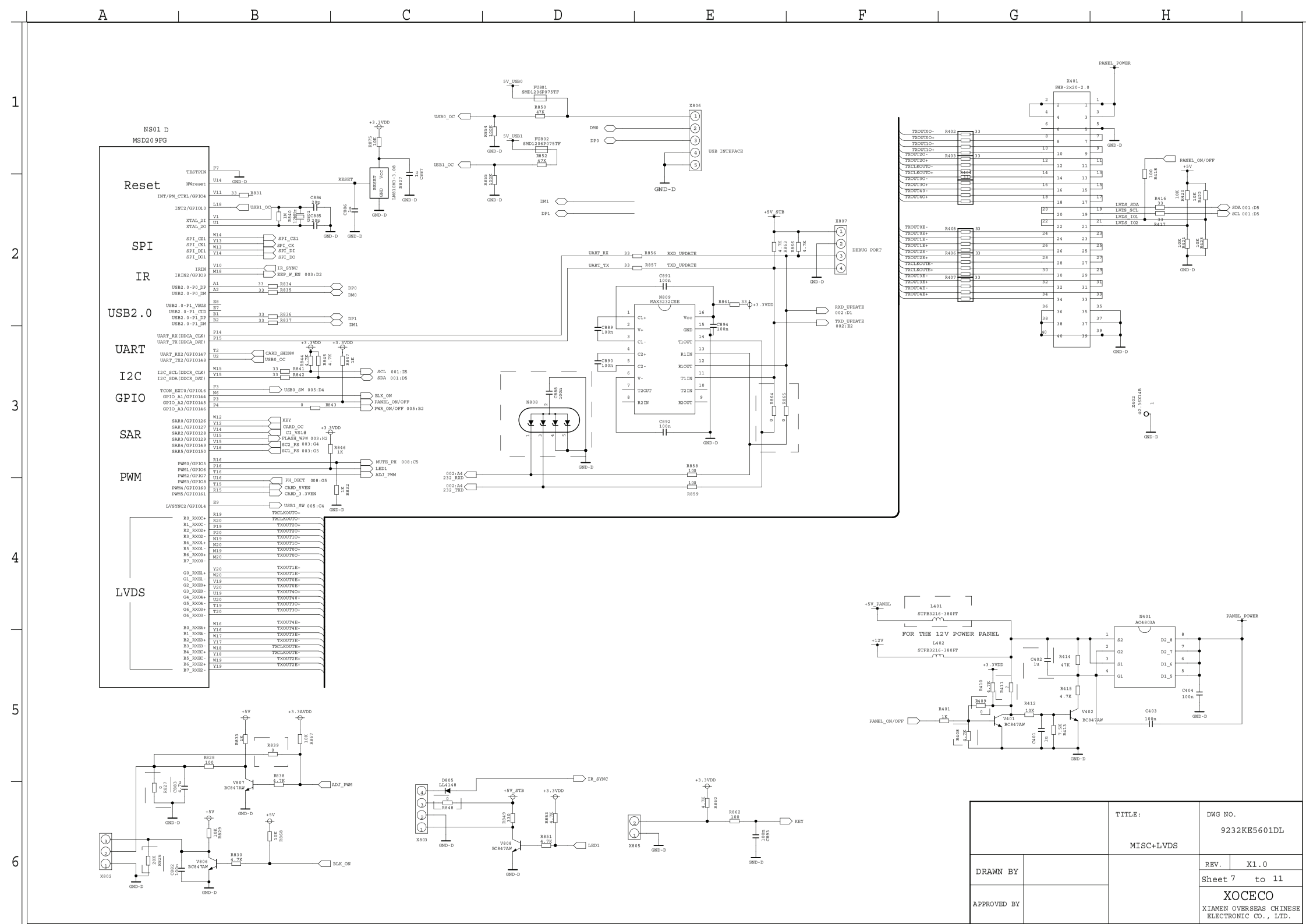
NS01 D
MSD209FG
Reset
SPI
IR
USB2.0
UART
I2C
GPIO
SAR
PWM
LVDS
USB INTEFACE
DEBUG PORT
PANEL_POWER
PANEL_ON/OFF
FOR THE 12V POWER PANEL
TITLE:
MISC+LVDS
DWG NO.
9232KE5601DL
DRAWN BY
APPROVED BY
REV. X1.0
Sheet 7 to 11
XOCECO
XIAMEN OVERSEAS CHINESE ELECTRONIC CO., LTD.

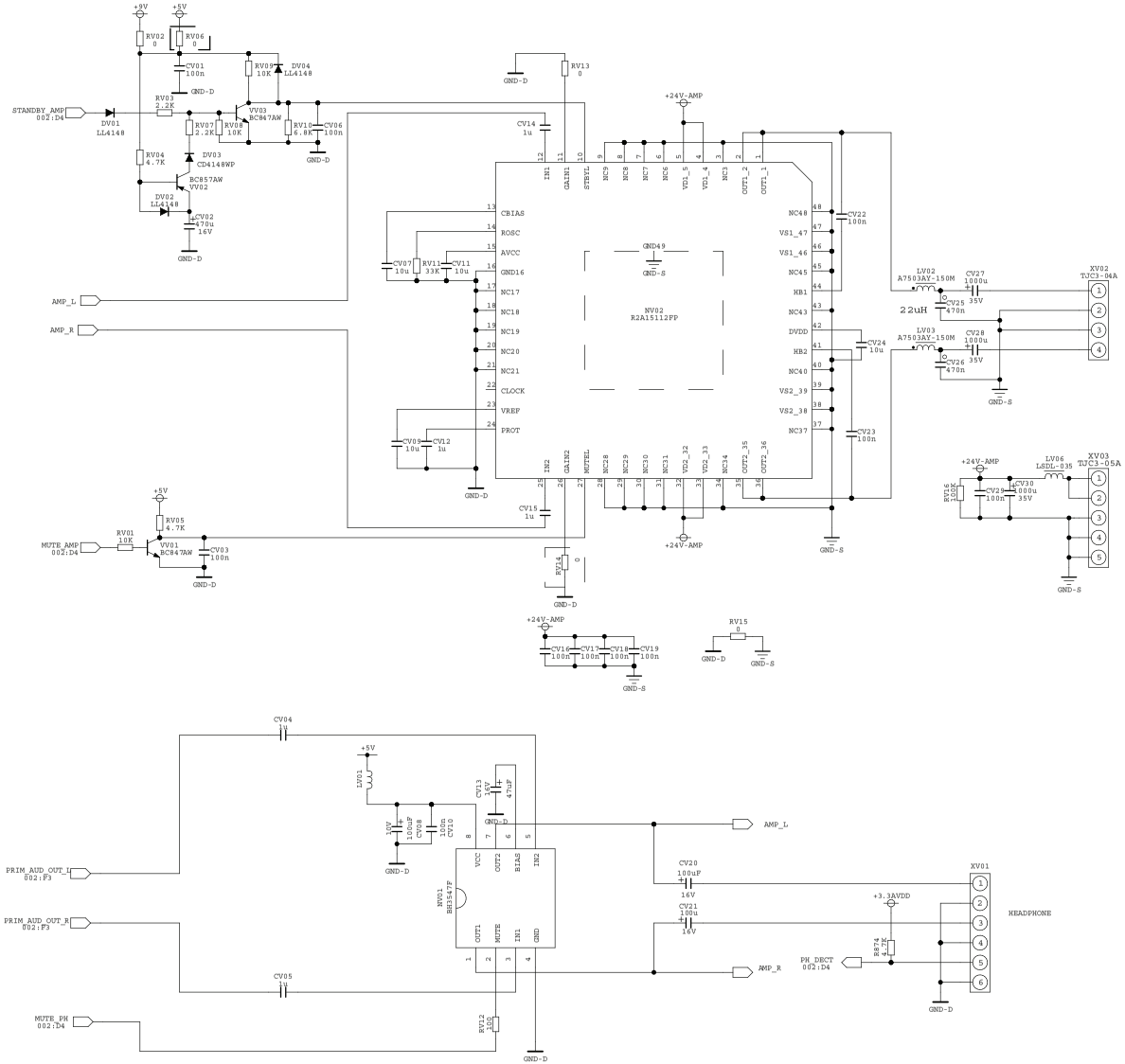

		TITLE: AUDIO AMP	DWG NO. 9232KE5601DL
DRAWN BY			REV. X1.0
APPROVED BY			Sheet 8 to 11
			XOCECO XIAMEN OVERSEAS CHINESE ELECTRONIC CO., LTD.

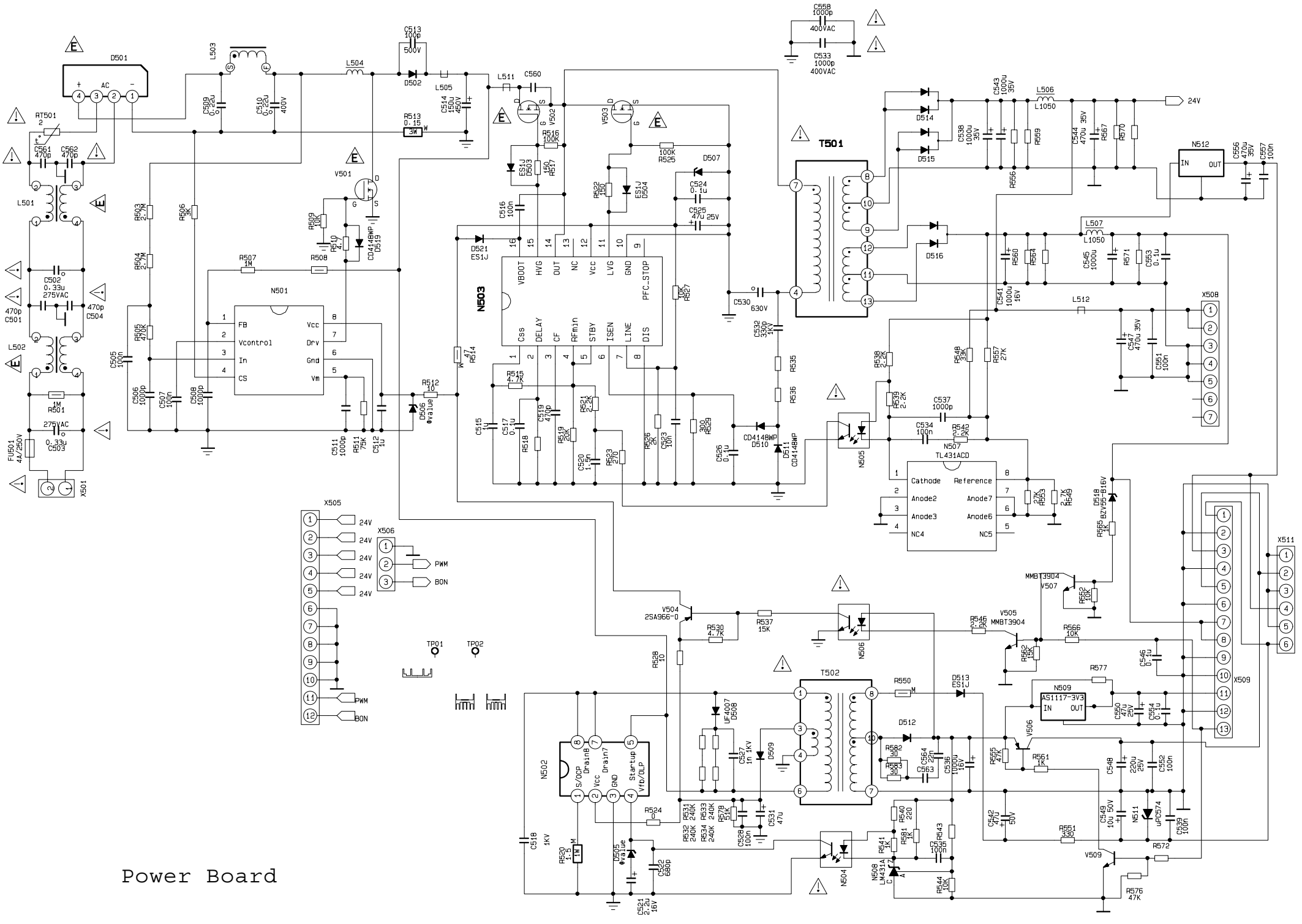
Power Board

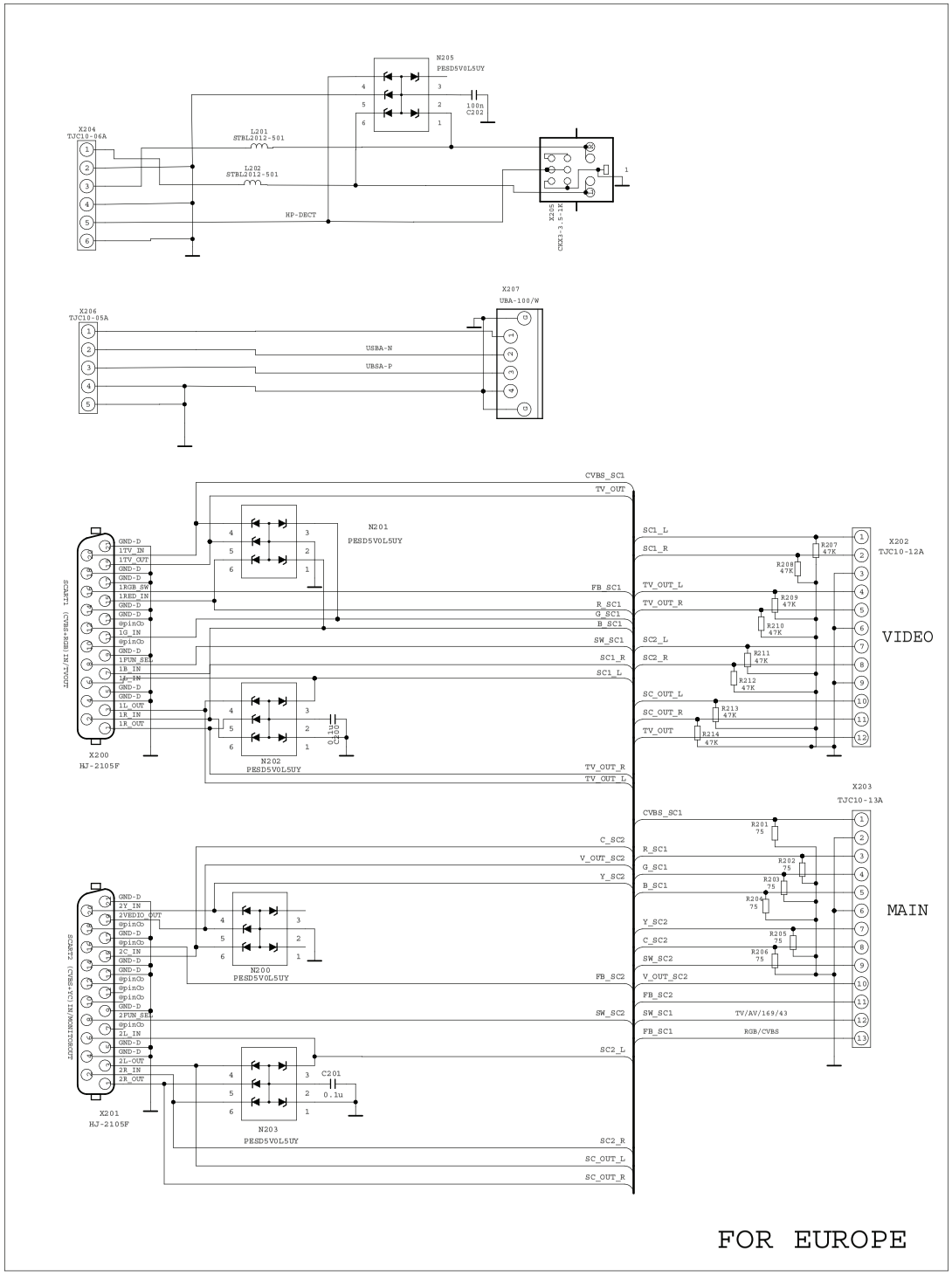

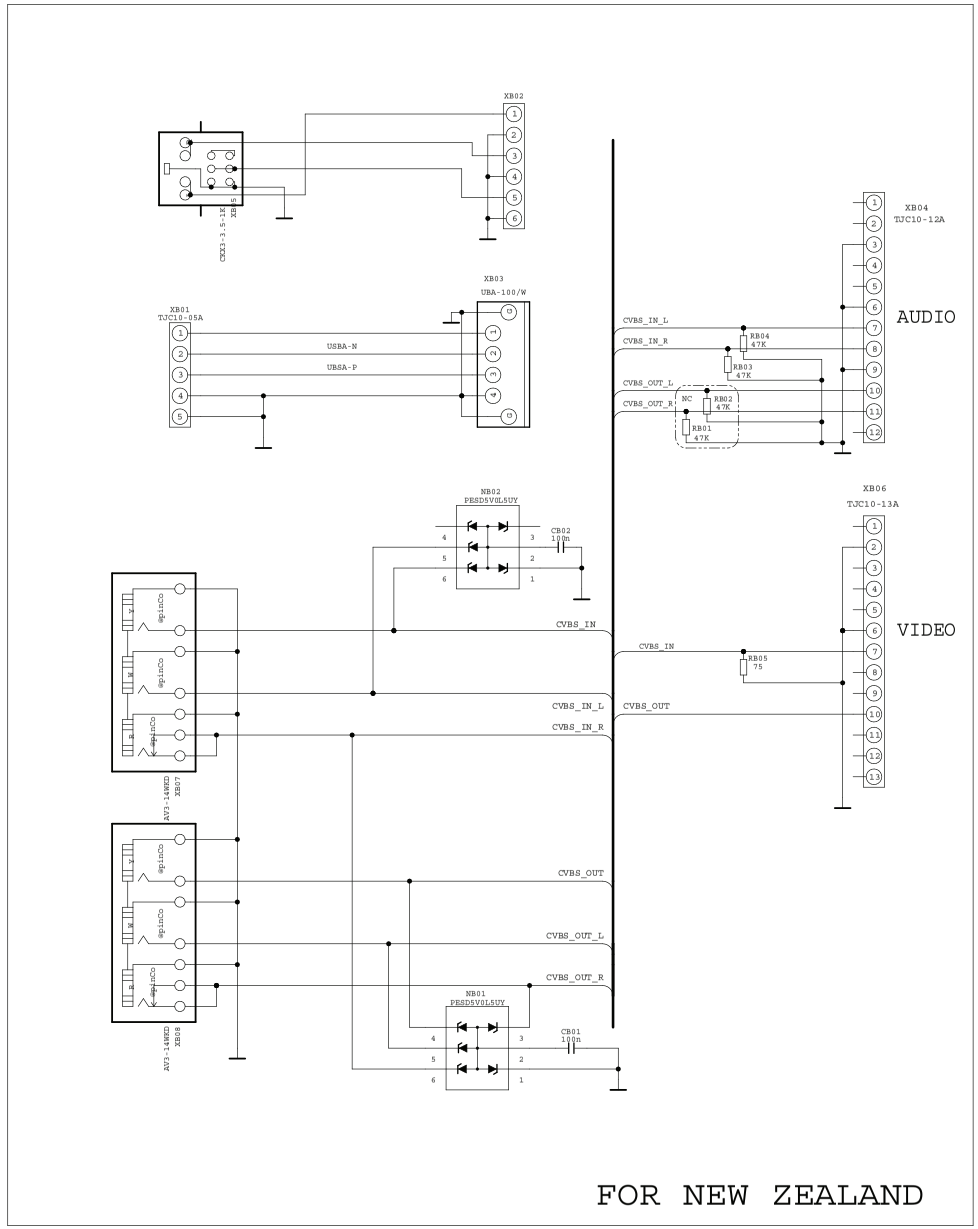

		TITLE: INTERFACE BOARD	DWG NO. 9232KE5601DL
DRAWN BY			REV. X1.0
			Sheet 10 to 11
APPROVED BY			XOCECO XIAMEN OVERSEAS CHINESE ELECTRONIC CO., LTD.

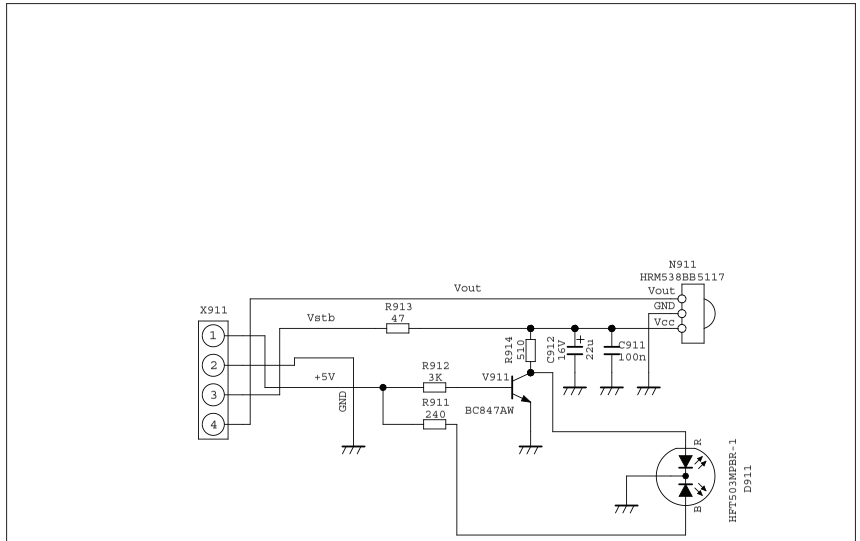

IR

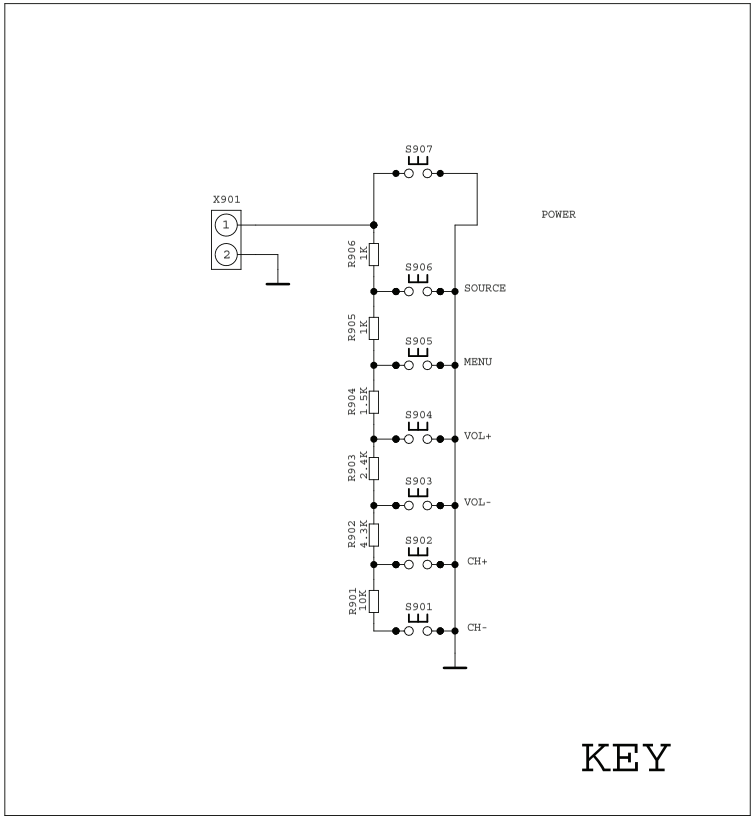

KEY

		TITLE: IR, KEY	DWG NO. 569KE01690DL
DRAWN BY			REV. X1.0
APPROVED BY			Sheet 11 of 11

XOCECO
XIAMEN OVERSEAS CHINESE ELECTRONIC CO., LTD.

APPENDIX-A: Main assembly 9232KE5610

NAME	NO.	MAIN COMPONENT AND IT'S NO.	
Data processing board	6KE00169A0	NS01 NS02 NS03 NJ01 TUNER1 NV02	MSD209FG (5270209001) K4T51163QG-HCF7(5275116301) CE6353 (5276353001) FQD1116ME/I V (5524000029) R2A15112FP (5271511201)
IR board	6HC0040910		
Key board	6HE0150510		
Power board	6KE0012010		
Remote control	6010J017A1	RC-J17-0A	
Panel	52033253304	T315XW02 VS	

APPENDIX-B: Exploded view (LC-32KE56)

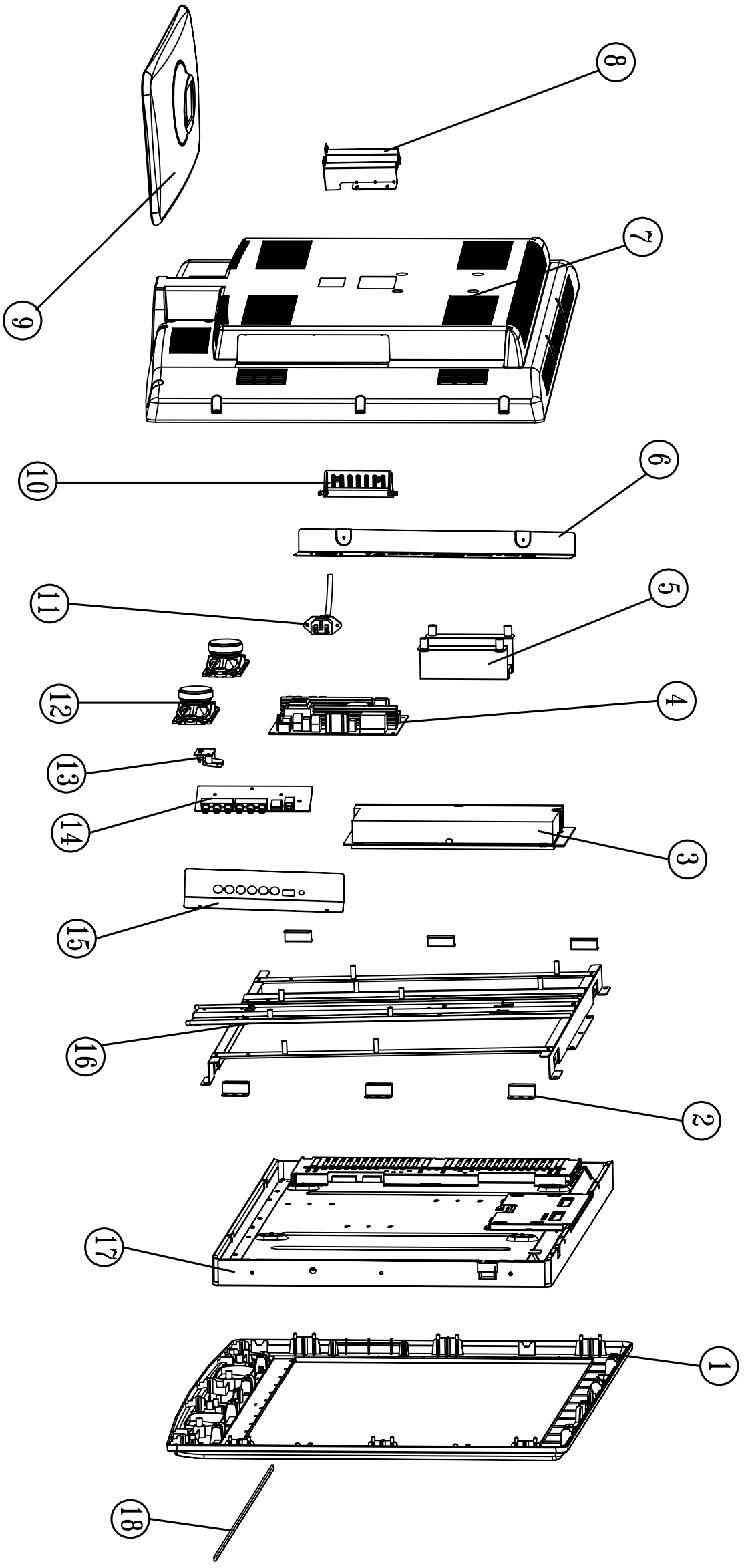

PART LIST OF EXPLODED VIEW LC-32KE56

NO.	DESCRIPTION
1	Front cabinet
2	Panel side pressing block
3	Digital processing assembly
4	Power board assembly
5	Wall-mounting connector
6	Interface baffle
7	Back cabinet
8	Upright pole
9	Pedestal base
10	Key board
11	Power socket
12	Speaker
13	IR assembly
14	Interface connecting assembly
15	Interface baffle
16	Panel fixed bracket assembly
17	Display panel
18	Decorative bar

Note: design and specifications are subject to change without notice.

PART LIST----------

LCD-32XR56DZ ver 1.0

NO.	PART NO.	DESCRIPTION	QTY.	REMARK
1	5Q32560040	Front cabinet	1	
2	581006660A	Panel side pressing block	10	
3	6KE00169A0	Digital processing assembly	1	
4	6KE0012010	Power board assembly	1	
5	5810063300	Wall-mounting connector	1	
6	5810163110	Interface baffle	1	
7	5H32561010	Back cabinet	1	
8	58D0027400	Upright pole	1	
9	6151154000	Pedestal base	1	
10	6HE0150510	Key board	1	
11	5282000004	Power socket	1	
12	5500806004	Speaker	1	
13	6HC0040910	IR assembly	1	
14	6KE0012460	Interface connecting assembly	1	
15	5810C66710	Interface baffle	1	
16	6153209000	Panel fixed bracket assembly	2	
17	5203325304	Display panel	1	T315XW02 VS
18	573K245010	Decorative bar	1	

·Only the parts in above list are used for repaired.

·Other parts except the above parts can't be supplied.

Assembly list of panel

Components	No.	Panel model
back light board 19.31	XI60Z0000596	32T315XW02 VS00
logic board 55.31	XI60Z0000597	32T315XW02 VS00

Note: specifications are subject to change without notice.

66CM AND 81CM
ASSEMBLE AND ATTACH THE PEDESTAL BASE

Safety Precautions

1. **Please read these instructions thoroughly prior to attempting this installation.**
2. **Be sure to handle this product very carefully when attempting to assemble. The manufacturer is not responsible for any damages or injuries that occur due to mishandling or improper assembly/installation.**
3. **When using a table or bench as an aid to assemble, be sure to put a soft cushion or covering to prevent accidental scratching or damage to the unit's finish.**
4. **The speaker is not intended to support the weight of this display. Do not move or handle this product from the speaker; which can cause damage to the display not covered under the manufacturer's warranty.**

Attachment Parts :

- Stand (1 piece)
- M5 Screw (4 pieces)

Install the Stand

1. Place the LCD TV face down on a soft cloth blanket or cushion to protect its surface from scratching. Line up the display base bracket and the base.
2. Using the supplied M5 screws (4 pieces) secure the base to the LCD TV.
3. Carefully lift the LCD off its face and stand it upright on its base.

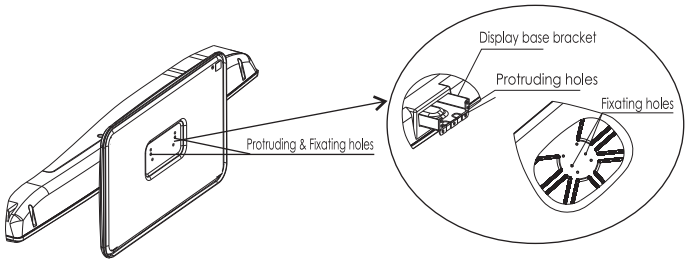

2. Using the supplied M5 screws (4 pieces) to tighten securely.

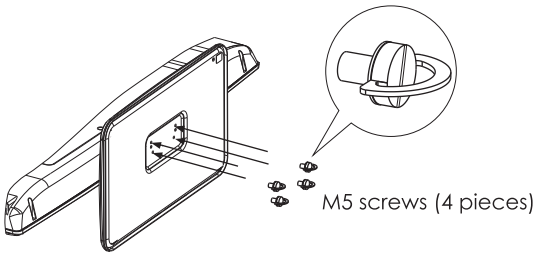

Note

1. Appearance of this product in illustrations may differ from your actual product and is for comparative purposes only.
2. Design and specifications are subject to change without notice.

WALL MOUNTING INSTRUCTIONS

Safety Precautions:

1. Be sure to ask an authorized service personnel to carry out setup.
2. Thoroughly read this instruction before setup and follow the steps below precisely.
3. The wall to be mounted should be made from solid materials. Only use accessories supplied by the manufacturer.
4. Very carefully handle the unit during setup. We are not liable for any damage or injury caused by mishandling or improper installation.
5. Be sure to place the unit on a stable and soft platform which is strong enough to support the unit.
6. Do not uplift the speaker when moving the display. The appearance of the unit may different from the actual ones.
7. Design and specifications are subject to change without notice.
8. Retain these instructions for future reference.

Note: All the wall mounting parts are optional and may be unavailable in your model.

Below we will show you how to mount the Display on the wall using our company's wall mounting components.

1

Take out these parts from the box.

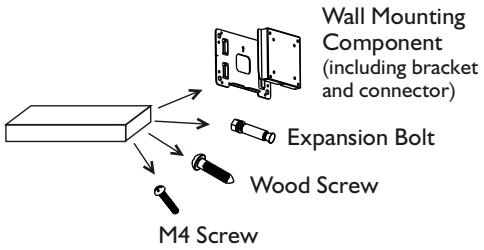

Fig. 1

2

Screw 4pcs expansion bolts to fix the wall mounting bracket on the wall.

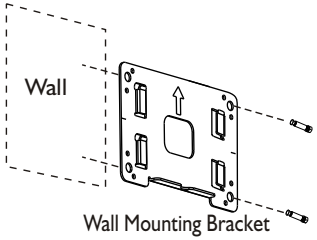

Fig. 2a

If your wall is a wooden structure, please fix the wall mounting bracket on the wall with 8 pcs wood screws.

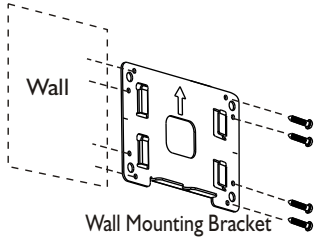

Fig. 2b

3

Use the 4pcs M4 screws to fix the wall mounting connector to the rear of the display unit.

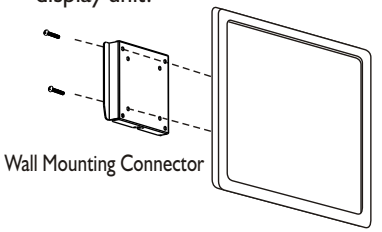

Fig. 3

4

Fully insert the two insertions on the wall mounting connector into the locating grooves on the wall mounting bracket from top to bottom end.

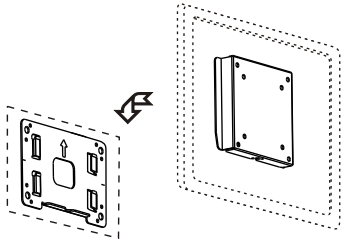

Fig. 4

5

Use screwdriver to revolve the Clasper to the Positioner following the direction of the arrow.

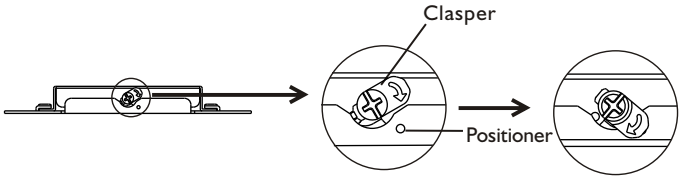

Fig. 5

April/2009

SANYO Electric Co., Ltd.