LG2401283-DW-TP 240 x 128 dots + white led backlight + touch panel

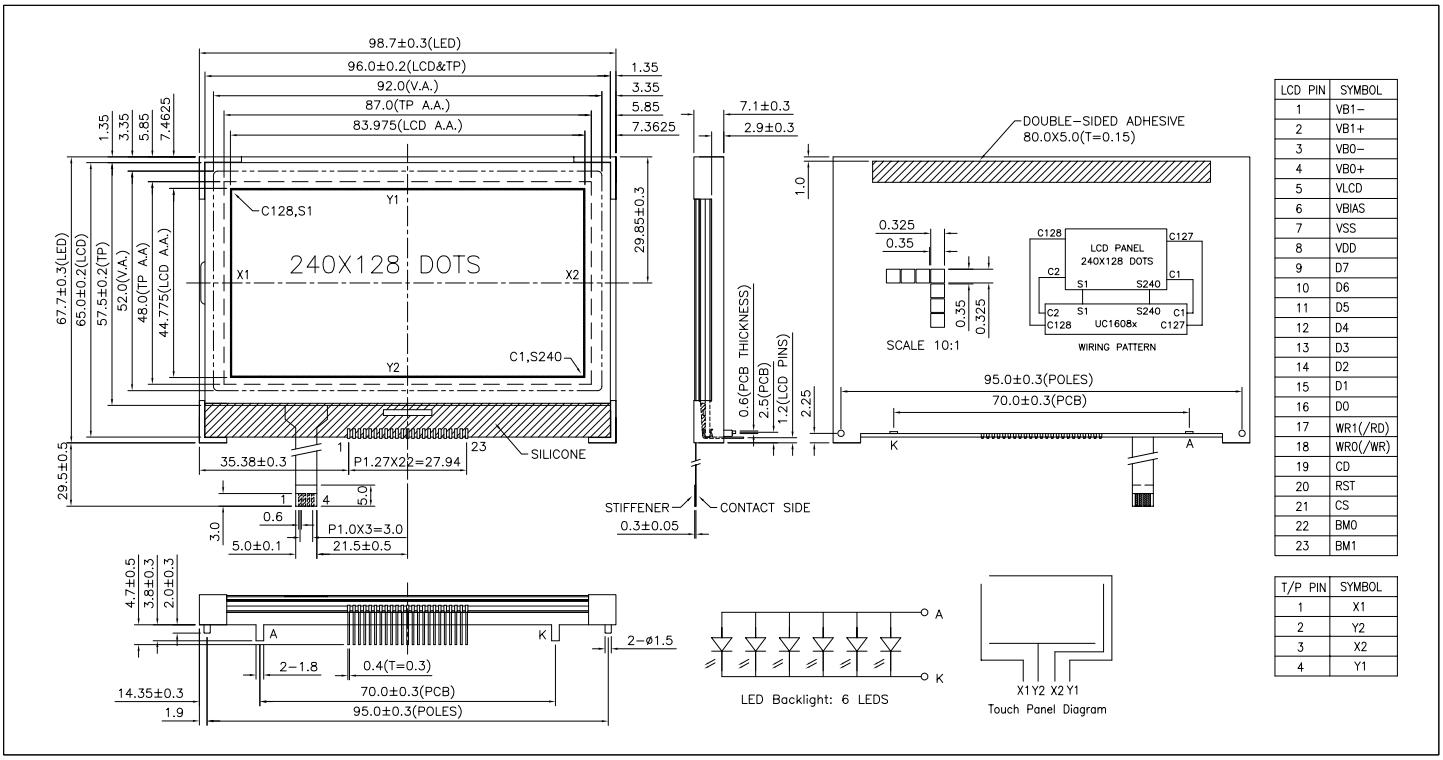

LCD PIN	SYMBOL
1	VB1−
2	VB1+
3	VB0−
4	VB0+
5	VLCD
6	VBIAS
7	VSS
8	VDD
9	D7
10	D6
11	D5
12	D4
13	D3
14	D2
15	D1
16	D0
17	WR1(/RD)
18	WR0(/WR)
19	CD
20	RST
21	CS
22	BM0
23	BM1

T/P PIN	SYMBOL
1	X1
2	Y2
3	X2
4	Y1

ABSOLUTE MAXIMUM RATINGS

Item	Symbol	Min.	Max.	Unit
Supply Voltage(Logic)	V_{DD} - V_{SS}	-0.3	4.0	V
Supply Voltage(LCD)	V_{LCD} - V_{SS}	-0.3	17.0	V
Input Voltage	V_I	-0.3	V_{DD}+ 0.5	V
Operating Temp.	T_{opr}	-20	70	°C
Storage Temp.	T_{stg}	-30	80	°C

MECHANICAL DATA

Item	Nominal Dimensions	Unit
Module Size (W x H x T)	98.7 x 67.7 x 11.8	mm
Viewing Area (W x H)	92.0 x 52.0	mm
Dot Pitch (W x H)	0.35 x 0.35	mm
Dot Size (W x H)	0.325 x 0.325	mm
Weight	Approx. 70	g

ELECTRICAL CHARACTERISTICS (V_{DD}=2.7V to 3.3V)

Item	Symbol	Test Condition	Min.	Typ.	Max.	Unit
Input High Voltage	V_{IH}	--	0.8V_{DD}	--	V_{DD}	V
Input Low Voltage	V_{IL}	--	0	--	0.2V_{DD}	V
Output High Voltage	V_{OH}	--	0.8V_{DD}	--	V_{DD}	V
Output Low Voltage	V_{OL}	--	0	--	0.2V_{DD}	V
Supply Current	I_{DD}	V_{DD} = 3.0V	--	1.0	1.5	mA
LCD Driving Voltage	V_{LCD}-V_{SS}	Ta=25°C	--	15.2	--	V

PIN CONNECTIONS

Pin	Symbol	Level	Function
1	VB1-	--	LCD bias voltage
2	VB1+	--	LCD bias voltage
3	VB0-	--	LCD bias voltage
4	VB0+	--	LCD bias voltage
5	V_{LCD}	--	LCD driving voltage. V_{LCD} is generated internally by UC1608.
6	V_{BIAS}	--	Reference voltage to generate lcd driving voltage. V_{BIAS} is used for LCD contrast fine turnning.
7	V_{SS}	0V	GND
8	V_{DD}	2.7-3.3V	Power supply for logic and booster
9-16	D7-D0	H/L	Data bus
17	WR1	H/L	/RD for 80 MPU, E for 68 MPU
18	WR0	H/L	/WR for 80 MPU, R/W for 68 MPU
19	CD	H/L	H:Display data L:Instruction code
20	RST	L	Reset signal. Active "L".
21	CS	H	Chip selection signal. Active "H".
22	BM0	H/L	Bus mode selection
23	BM1	H/L	

BLOCK DIAGRAM

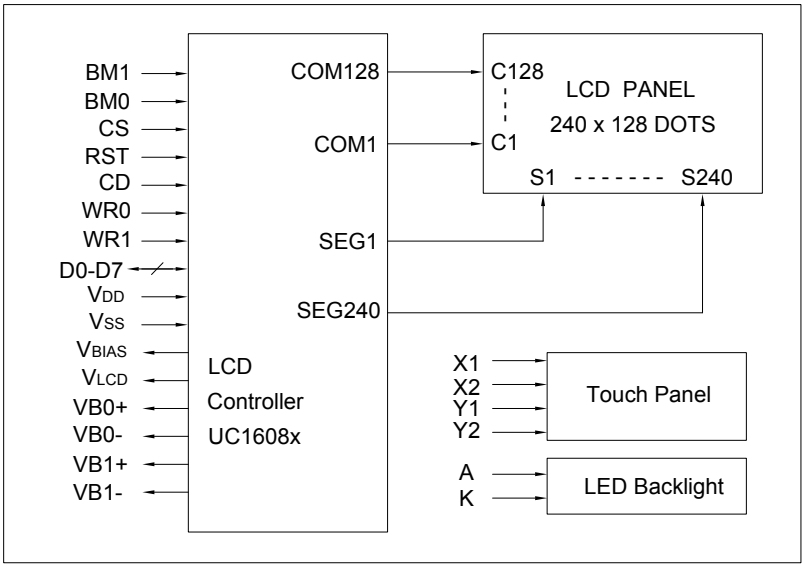

LED BACKLIGHT SPECIFICATIONS (Ta=25°C)

Item	Symbol	Typ.	Max.	Unit
Forward Voltage	V_f	3.1	3.3	V
Forward Current	I_f	90	--	mA
LED Color		White		