36-V General Purpose Op Amps, Automotive Qualification

Features

- Supply Voltage: 3 V to 36 V or ±1.5 V to ±18 V
- Low Supply Current: 100 μA per Channel
- Input Common-Mode Voltage Range Includes Ground
- Can Work as Comparators
- Rail-to-Rail Output
- Bandwidth: 0.9 MHz
- Slew Rate: 0.5 V/μs
- Excellent EMI Suppress Performance: 71 dB at 1 GHz
- Offset Voltage: ±3 mV (Max)
- Operating Temperature Range: –40°C to 125°C
- Qualified for Automotive Applications with AEC-Q100 Reliability Test

Applications

- Automotive
- Sensor Interface
- Motor Control

Description

The LM2904A-Q100/LM2902A-Q100 is a series of the newest high-supply voltage amplifiers with low offset, low power, and stable frequency response. The series incorporates 3PEAK's proprietary and patented design techniques to achieve excellent AC performance with 0.9-MHz bandwidth and 0.5-V/μs slew rate. The input common-mode voltage range extends to $-V_S$, and the outputs swing rail-to-rail. The LM2904A-Q100/LM2902A-Q100 series can be used as plug-in replacements for commercially available op amps to reduce power and improve input/output range and performance.

The combination of features makes the LM2904A-Q100/LM2902A-Q100 ideal choices for the power module, industrial control, motor control, and audio applications.

Table of Contents

Features 1
Applications 1
Description 1
Revision History 3
Pin Configuration and Functions 4
Specifications 6
Absolute Maximum Ratings (1) 6
ESD, Electrostatic Discharge Protection 6
Thermal Information 6
Electrical Characteristics 7
Typical Performance Characteristics 9
Tape and Reel Information 11
Package Outline Dimensions 12
SOP8 12
TSSOP8 13
MSOP8 14
SOP14 15
TSSOP14 16
Order Information 17
IMPORTANT NOTICE AND DISCLAIMER 18

Revision History

Date	Revision	Notes
2022-12-25	Rev.A.0	Initial version.
2023-06-01	Rev.A.1	The following updates are all about the new datasheet formats or typos, and the actual product remains unchanged. • Updated address of website. • Updated Tape and Reel Information. • Updated status of LM2902A-TS2R-S and LM2902A-SO2R-S. • Finished the Q100 test.
2024-12-18	Rev.A.2	The following updates are all about the new datasheet formats or typos, and the actual product remains unchanged. • Updated to a new datasheet format. • Updated to a new format of Package Outline Dimensions. • Updated the Tape and Reel Information.
2025-05-16	Rev.A.3	Corrected typos for the unit of differential input voltage.

Pin Configuration and Functions

LM2904A
SOP8/TSSOP8/MSOP8
Top View

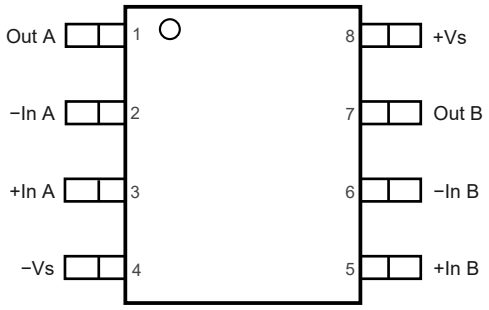

Table 1. Pin Functions: LM2904A

Pin No.	Name	I/O	Description
1	Out A	O	Output
2	−In A	I	Inverting input
3	+In A	I	Non-inverting input
4	$-V_S$	-	Negative power supply
5	+In B	I	Non-inverting input
6	−In B	I	Inverting input
7	Out B	O	Output
8	$+V_S$	-	Positive power supply

LM2902A
SOP14/TSSOP14
Top View

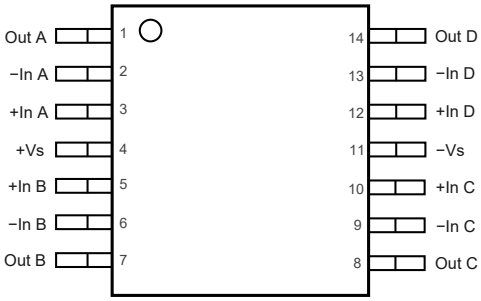

Table 2. Pin Functions: LM2902A

Pin No.	Name	I/O	Description
1	Out A	O	Output
2	−In A	I	Inverting input
3	+In A	I	Non-inverting input
4	$+V_S$	-	Positive power supply
5	+In B	I	Non-inverting input
6	−In B	I	Inverting input
7	Out B	O	Output power supply
8	Out C	O	Output power supply
9	−In C	I	Inverting input
10	+In C	I	Non-inverting input
11	$-V_S$	-	Negative power supply
12	+In D	I	Non-inverting input
13	−In D	I	Inverting input
14	Out D	O	Output

Specifications

Absolute Maximum Ratings (1)

Parameter		Min	Max	Unit
	Supply Voltage, $(+V_S) – (−V_S)$		40	V
	Voltage on Input Pins and Output Pins	$(−V_S) − 0.3$	$(+V_S) + 0.3$	V
	Differential Input Voltage	$(−V_S) − (+V_S)$	$(+V_S) − (−V_S)$	V
	Input Current: +IN, –IN (2)	−10	10	mA
	Output Short-Circuit Duration (3)		Infinite	
T_J	Maximum Junction Temperature		150	°C
T_A	Operating Temperature Range	−40	125	°C
T_{STG}	Storage Temperature Range	−65	150	°C
T_L	Lead Temperature (Soldering 10 sec)		260	°C

(1) Stresses beyond those listed under Absolute Maximum Ratings may cause permanent damage to the device. Exposure to any Absolute Maximum Rating condition for extended periods may affect device reliability and lifetime.
(2) The inputs are protected by ESD protection diodes to each power supply. If the input extends more than 300 mV beyond the power supply, the input current should be limited to less than 10 mA.
(3) A heat sink may be required to keep the junction temperature below the absolute maximum. This depends on the power supply voltage and how many amplifiers are shorted. Thermal resistance varies with the amount of PC board metal connected to the package. The specified values are for short traces connected to the leads.

ESD, Electrostatic Discharge Protection

Symbol	Parameter	Condition	Minimum Level	Unit
HBM	Human Body Model ESD	AEC-Q100-002	3	kV
CDM	Charged Device Model ESD	AEC-Q100-011	1	kV

Thermal Information

Package Type	θ_{JA}	θ_{JC}	Unit
SOP8	158	43	°C/W
TSSOP8	191	44	°C/W
MSOP8	210	45	°C/W
SOP14	120	36	°C/W
TSSOP14	180	35	°C/W

Electrical Characteristics

All test conditions: V_S = 30 V, T_A = 25°C, R_L = 10 kΩ, C_L = 100 pF, unless otherwise noted.

Symbol	Parameter	Conditions	T_A	Min	Typ	Max	Unit
Power Supply							
V_S	Supply Voltage Range			3		36	V
I_Q	Quiescent Current per Amplifier	V_S = 30 V			120	300	μA
			Operating Range			500	μA
PSRR	Power Supply Rejection Ratio	V_S = 5 V to 36 V		80	120		dB
			Operating Range	70			dB
Input Characteristics							
V_{OS}	Input Offset Voltage	V_S = 30 V, V_{CM} = 0 V to 28 V		−4	1	4	mV
			Operating Range	−7		7	mV
		V_S = 5 V, V_{CM} = 0 V to 3 V		−4	1	4	mV
			Operating Range	−7		7	mV
V_{OS} TC	Input Offset Voltage Drift		Operating Range		7		μV/°C
I_B	Input Bias Current (1)				60	1000	pA
			Operating Range		600	2000	pA
I_{OS}	Input Offset Current (1)				60	1000	pA
			Operating Range		600	2000	pA
R_{IN}	Input Impendence				10^{10}		Ω
C_{IN}	Input Capacitance	Differential mode			5		pF
		Common mode			5		pF
A_V	Open-Loop Voltage Gain			90	110		dB
			Operating Range	85			dB
V_{CMR}	Common-Mode Input Voltage Range		Operating Range	(−V_S)		(+V_S) − 2	V
CMRR	Common-Mode Rejection Ratio	V_{CM} = 0 V to 28 V		65	120		dB
			Operating Range	60	90		dB
Output Characteristics							
	Output Voltage Swing from Positive and Negative Rail	R_{LOAD} = 10 kΩ to V_S / 2			200	500	mV
			Operating Range			1000	mV
		R_{LOAD} = 2 kΩ to V_S / 2			1.1	1.5	V
			Operating Range			3	V
	Output Voltage Swing from Negative Rail	V_S = 5 V, R_{LOAD} = 10 kΩ to 0 V			5	20	mV
I_{SC}	Output Short-Circuit Current			10	25		mA
			Operating Range	5			mA

Symbol	Parameter	Conditions	T_A	Min	Typ	Max	Unit
AC Specifications							
GBW	Gain-Bandwidth Product				0.9		MHz
SR	Slew Rate	G = 1, 2-V step			0.5		V/μs
t_S	Settling Time, 0.1%	G = 1, 2-V step			4		μs
	Settling Time, 0.01%				5		μs
PM	Phase Margin	V_S = 30 V, R_L = 1 kΩ, C_L = 100 pF			60		°
GM	Gain Margin	V_S = 30 V, R_L = 1 kΩ, C_L = 100 pF			15		dB
	Channel Separation	f = 1 kHz to 20 kHz			120		dB
Noise Performance							
E_N	Input Voltage Noise	f = 0.1 Hz to 10 Hz			3		μV_{RMS}
e_N	Input Voltage Noise Density	f = 1 kHz			70		nV/√Hz
i_N	Input Current Noise	f = 1 kHz			3		fA/√Hz

(1) Provided by bench tests and design simulation.

Typical Performance Characteristics

All test conditions: V_S = +15 V, V_{CM} = 0 V, R_L = 10 kΩ, unless otherwise noted.

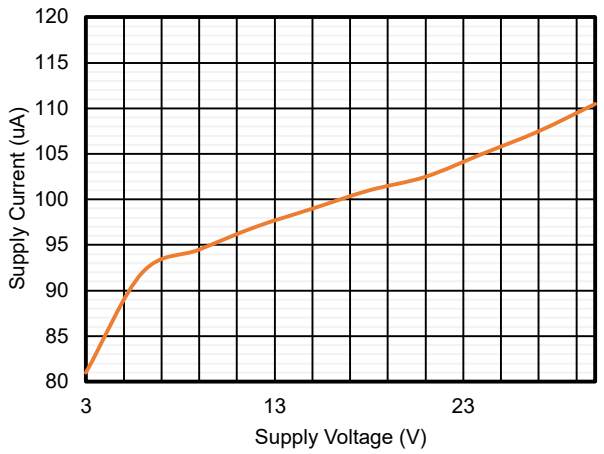

Figure 1. Quiescent Current vs. Supply Voltage

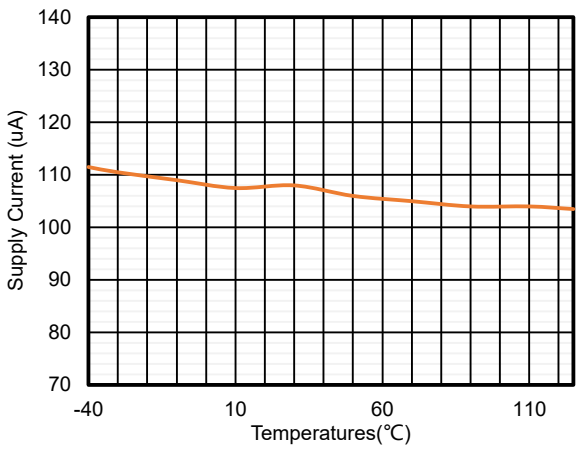

Figure 2. Quiescent Current vs. Temperature

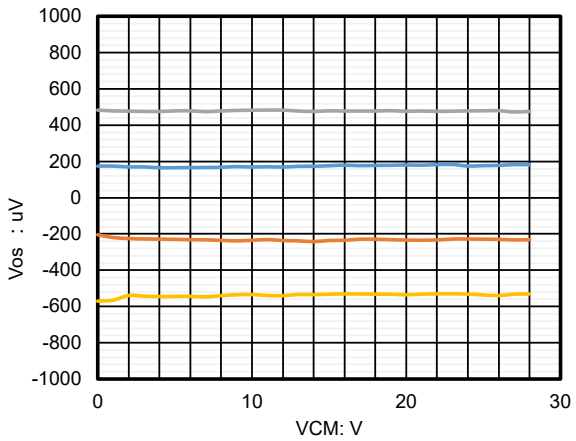

Figure 3. Offset Voltage vs. Common-Mode Voltage

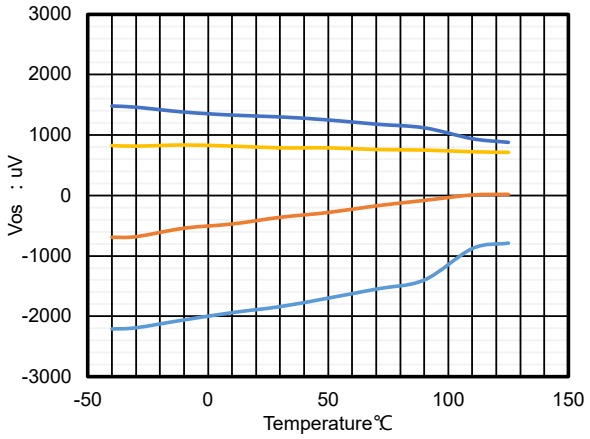

Figure 4. Offset Voltage vs. Temperature

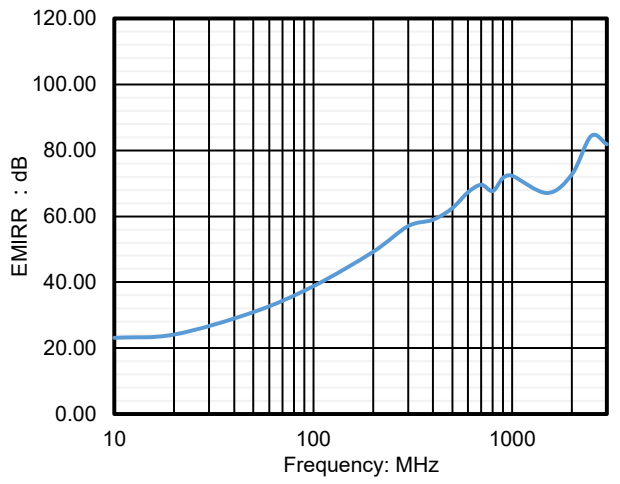

Figure 5. EMIRR+ vs. Frequency

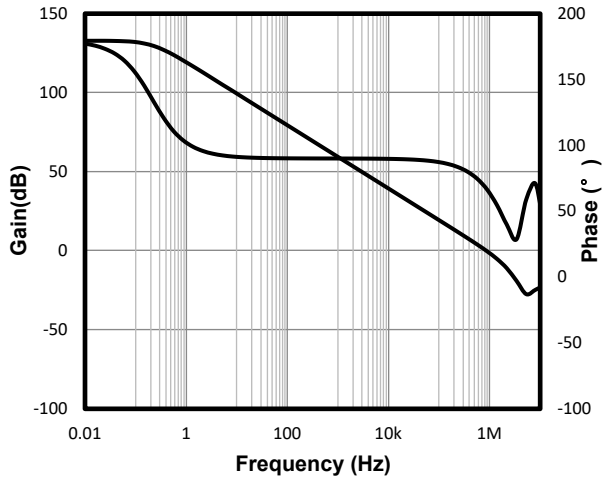

Figure 6. Open-Loop Gain and Phase vs. Frequency

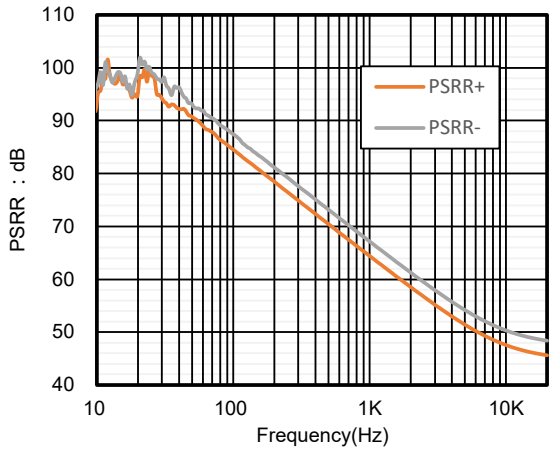

Figure 7. PSRR vs. Frequency

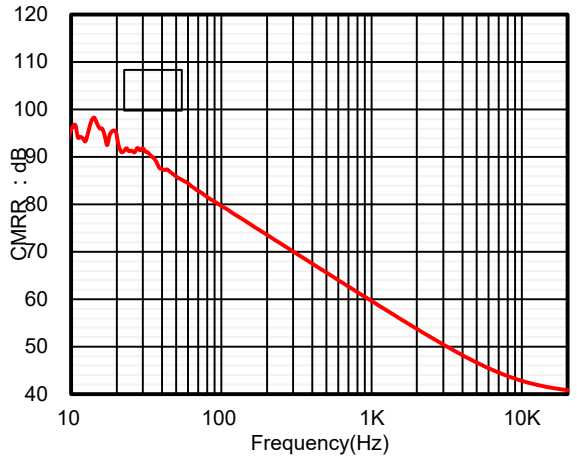

Figure 8. CMRR vs. Frequency

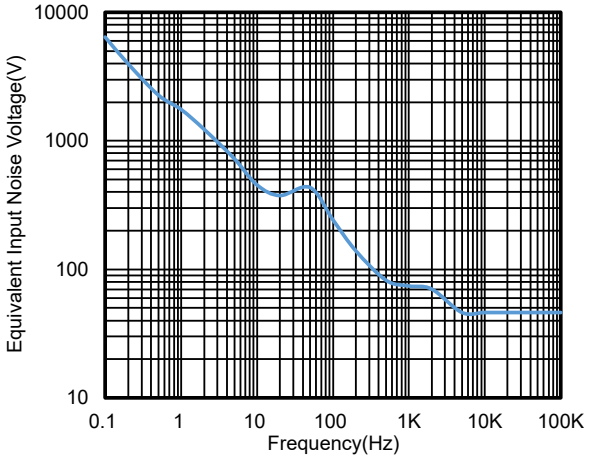

Figure 9. Voltage Noise Spectral Density vs. Frequency

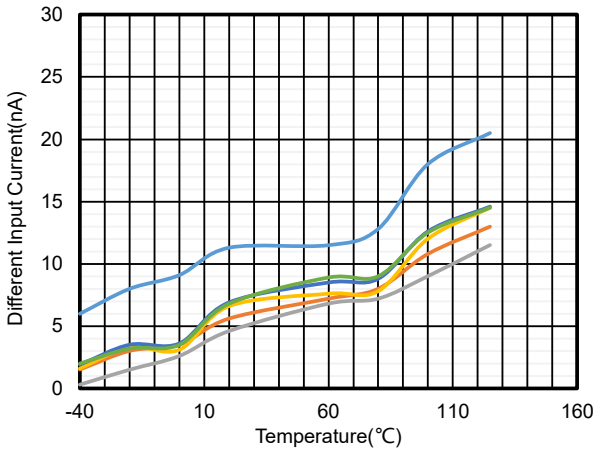

Figure 10. Different Input Current vs. Temperature

Tape and Reel Information

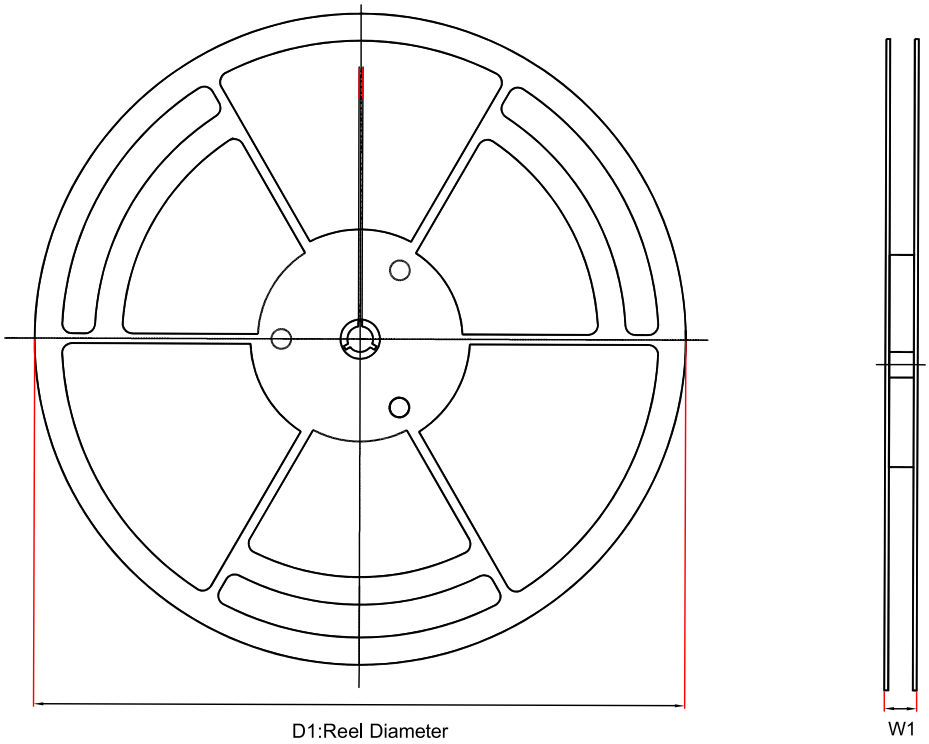

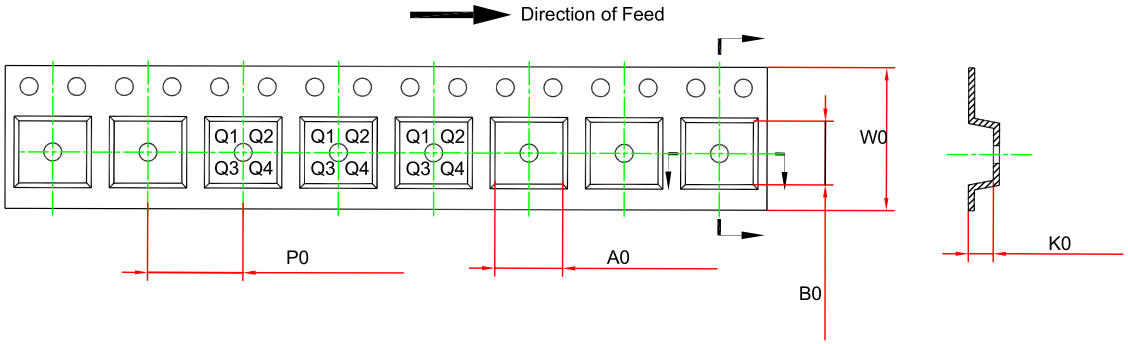

Order Number	Package	D1 (mm)	W1 (mm)	A0 (mm) (1)	B0 (mm) (1)	K0 (mm) (1)	P0 (mm)	W0 (mm)	Pin1 Quadrant
LM2904A-SO1R-S	SOP8	330.0	17.6	6.5	5.4	2.0	8.0	12.0	Q1
LM2904A-VS1R-S	MSOP8	330.0	17.6	5.2	3.3	1.5	8.0	12.0	Q1
LM2904A-TS1R-S	TSSOP8	330.0	17.6	6.8	3.3	1.7	8.0	12.0	Q1
LM2902A-SO2R-S	SOP14	330.0	21.6	6.5	9.2	1.8	8.0	16.0	Q1
LM2902A-TS2R-S	TSSOP14	330.0	17.6	6.8	5.5	1.7	8.0	12.0	Q1

(1) The value is for reference only. Contact the 3PEAK factory for more information.

Package Outline Dimensions

SOP8

Package Outline Dimensions SO1(SOP-8-A)

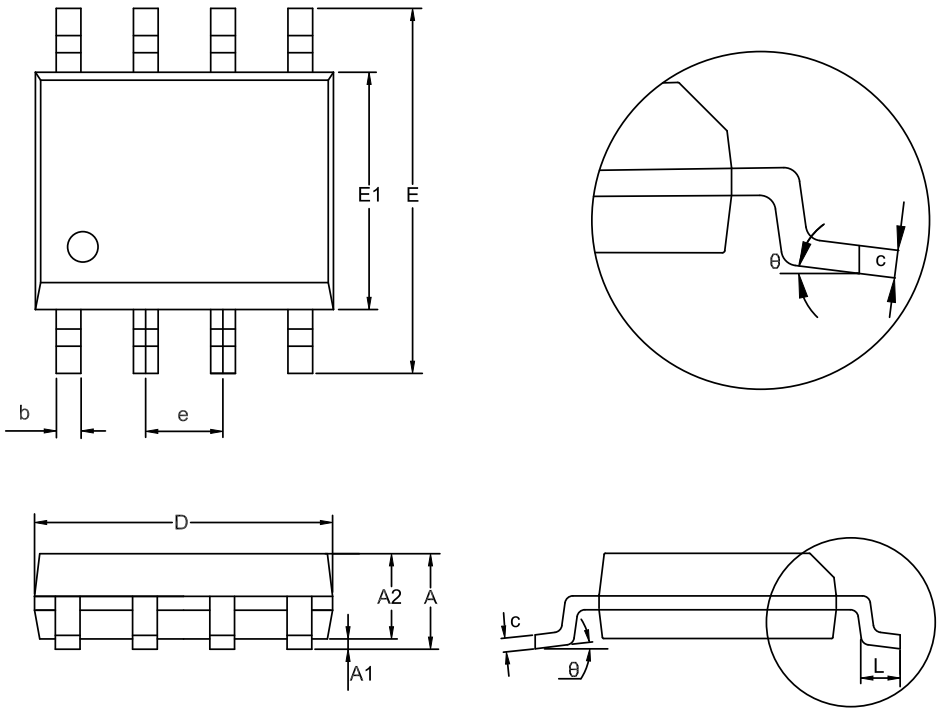

Symbol	Dimensions In Millimeters		Dimensions In Inches	
	MIN	MAX	MIN	MAX
A	1.350	1.750	0.053	0.069
A1	0.050	0.250	0.002	0.010
A2	1.250	1.550	0.049	0.061
b	0.330	0.510	0.013	0.020
c	0.170	0.250	0.007	0.010
D	4.700	5.100	0.185	0.201
E	5.800	6.200	0.228	0.244
E1	3.800	4.000	0.150	0.157
e	1.270 BSC		0.050 BSC	
L	0.400	1.000	0.016	0.039
θ	0	8°	0	8°

NOTES

1. Do not include mold flash or protrusion.
2. This drawing is subject to change without notice.

TSSOP8

Package Outline Dimensions TS1(TSSOP-8-A)

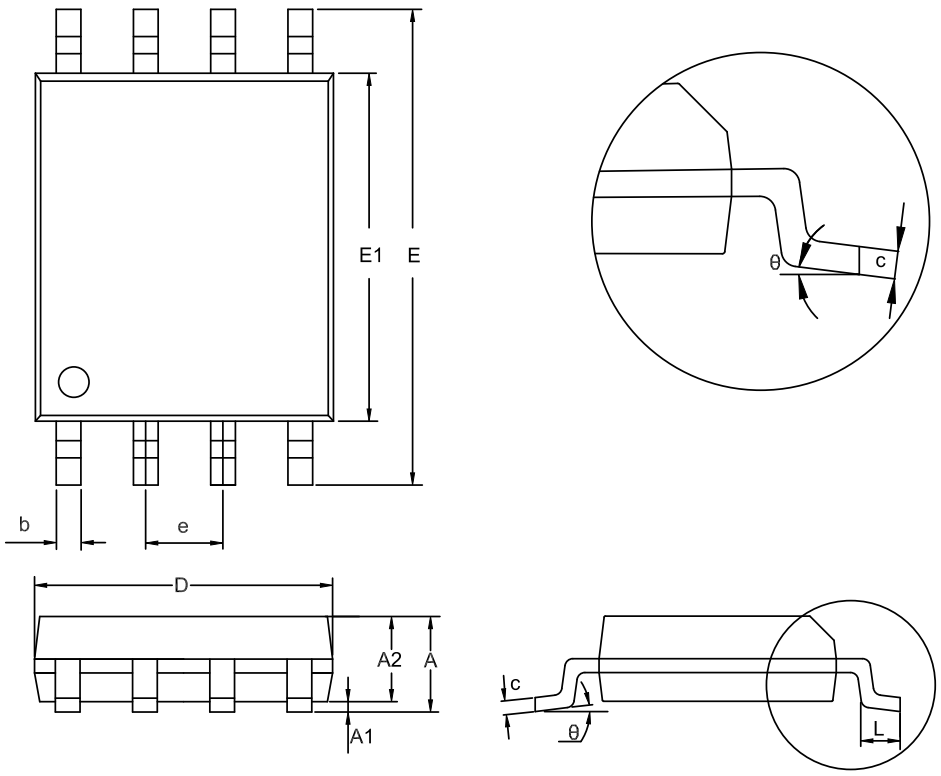

Symbol	Dimensions In Millimeters		Dimensions In Inches	
	MIN	MAX	MIN	MAX
A	0.900	1.200	0.035	0.047
A1	0.050	0.150	0.002	0.006
A2	0.800	1.050	0.031	0.041
b	0.190	0.300	0.007	0.012
c	0.090	0.200	0.004	0.008
D	2.900	3.100	0.114	0.122
E	6.200	6.600	0.244	0.260
E1	4.300	4.500	0.169	0.177
e	0.650 BSC		0.026 BSC	
L	0.450	0.750	0.018	0.030
θ	0	8°	0	8°

NOTES

1. Do not include mold flash or protrusion.
2. This drawing is subject to change without notice.

MSOP8

Package Outline Dimensions VS1(MSOP-8-A)

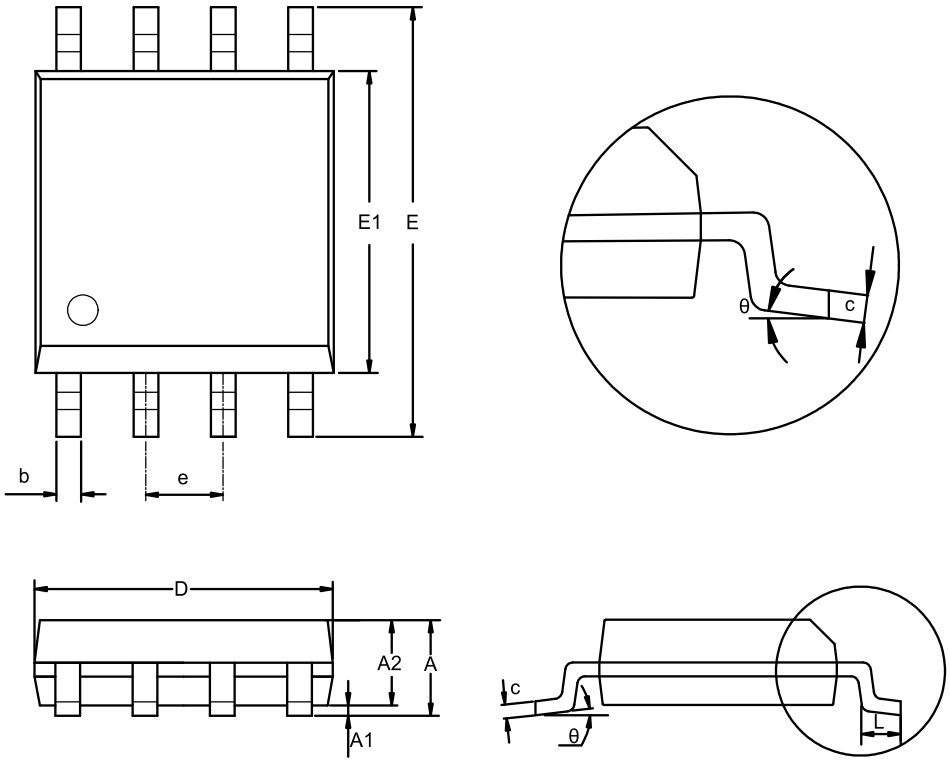

Symbol	Dimensions In Millimeters		Dimensions In Inches	
	MIN	MAX	MIN	MAX
A	0.800	1.100	0.031	0.043
A1	0.020	0.150	0.001	0.006
A2	0.750	0.950	0.030	0.037
b	0.250	0.380	0.010	0.015
c	0.090	0.230	0.004	0.009
D	2.900	3.100	0.114	0.122
E	4.700	5.100	0.185	0.201
E1	2.900	3.100	0.114	0.122
e	0.650 BSC		0.026 BSC	
L	0.400	0.800	0.016	0.031
θ	0	8°	0	8°

NOTES

1. Do not include mold flash or protrusion.
2. This drawing is subject to change without notice.

SOP14

Package Outline Dimensions SO2(SOP-14-A)

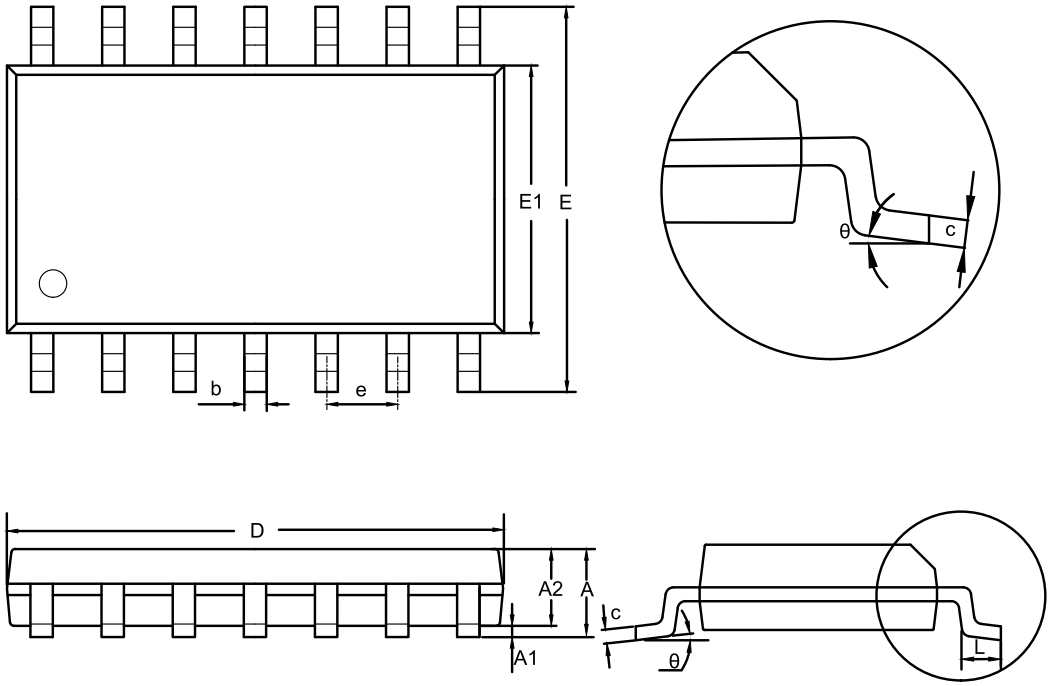

Symbol	Dimensions In Millimeters		Dimensions In Inches	
	MIN	MAX	MIN	MAX
A	1.350	1.750	0.053	0.069
A1	0.050	0.250	0.002	0.010
A2	1.250	1.650	0.049	0.065
b	0.310	0.510	0.012	0.020
c	0.100	0.250	0.004	0.010
D	8.450	8.850	0.333	0.348
E	5.800	6.200	0.228	0.244
E1	3.800	4.000	0.150	0.157
e	1.270 BSC		0.050 BSC	
L	0.400	1.270	0.016	0.050
θ	0	8°	0	8°

NOTES

1. Do not include mold flash or protrusion.
2. This drawing is subject to change without notice.

TSSOP14

Package Outline Dimensions TS2(TSSOP-14-A)

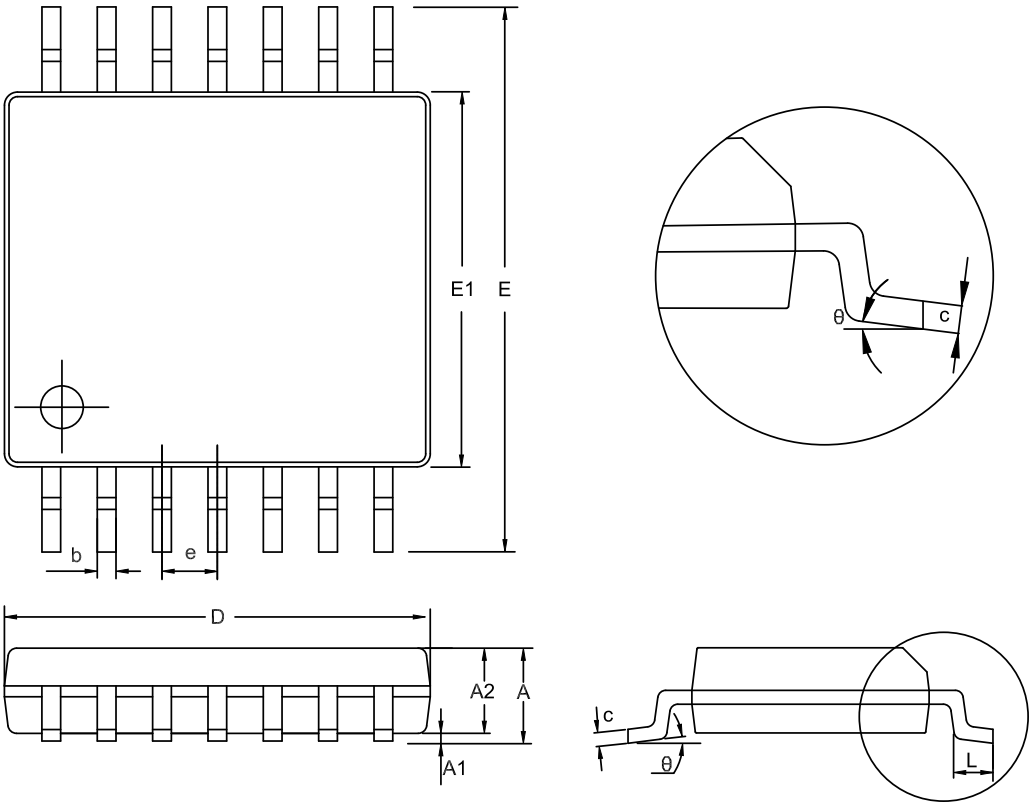

Symbol	Dimensions In Millimeters		Dimensions In Inches	
	MIN	MAX	MIN	MAX
A	0.900	1.200	0.035	0.047
A1	0.050	0.150	0.002	0.006
A2	0.800	1.050	0.031	0.041
b	0.190	0.300	0.007	0.012
c	0.090	0.200	0.004	0.008
D	4.900	5.100	0.193	0.201
E	6.200	6.600	0.244	0.260
E1	4.300	4.500	0.169	0.177
e	0.650 BSC		0.026 BSC	
L	0.450	0.750	0.018	0.030
θ	0	8°	0	8°

NOTES

1. Do not include mold flash or protrusion.
2. This drawing is subject to change without notice.

Order Information

Order Number	Operating Temperature Range	Package	Marking Information	MSL	Transport Media, Quantity	Eco Plan
LM2904A-SO1R-S	−40 to 125°C	SOP8	2904S	3	Tape and Reel, 4000	Green
LM2904A-TS1R-S	−40 to 125°C	TSSOP8	2904S	3	Tape and Reel, 3000	Green
LM2904A-VS1R-S	−40 to 125°C	MSOP8	2904S	3	Tape and Reel, 3000	Green
LM2902A-SO2R-S	−40 to 125°C	SOP14	2902S	3	Tape and Reel, 2500	Green
LM2902A-TS2R-S	−40 to 125°C	TSSOP14	2902S	3	Tape and Reel, 3000	Green

Green: 3PEAK defines "Green" to mean RoHS compatible and free of halogen substances.

IMPORTANT NOTICE AND DISCLAIMER

Copyright© 3PEAK 2012-2025. All rights reserved.

Trademarks. Any of the 思瑞浦 or 3PEAK trade names, trademarks, graphic marks, and domain names contained in this document /material are the property of 3PEAK. You may NOT reproduce, modify, publish, transmit or distribute any Trademark without the prior written consent of 3PEAK.

Performance Information. Performance tests or performance range contained in this document/material are either results of design simulation or actual tests conducted under designated testing environment. Any variation in testing environment or simulation environment, including but not limited to testing method, testing process or testing temperature, may affect actual performance of the product.

Disclaimer. 3PEAK provides technical and reliability data (including data sheets), design resources (including reference designs), application or other design recommendations, networking tools, security information and other resources "As Is". 3PEAK makes no warranty as to the absence of defects, and makes no warranties of any kind, express or implied, including without limitation, implied warranties as to merchantability, fitness for a particular purpose or non-infringement of any third-party's intellectual property rights. Unless otherwise specified in writing, products supplied by 3PEAK are not designed to be used in any life-threatening scenarios, including critical medical applications, automotive safety-critical systems, aviation, aerospace, or any situations where failure could result in bodily harm, loss of life, or significant property damage. 3PEAK disclaims all liability for any such unauthorized use.