2 Digit 8.4 mm (.3”) Series

Conventional Part No.	Global Prat No.	Lighting Color
LN523RAMR	LNM223AP01	Red
LN523RKMR	LNM223KP01	Red
LN523GAMG	LNM323AP01	Green
LN523GKMG	LNM323KP01	Green

Terminal Connection

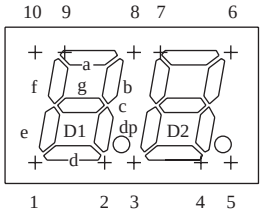

Pin No.	Assignment	Assignment
1	Cathode c	Anode c
2	Cathode dp	Anode dp
3	Common Anode D2	Common Cathode D2
4	Cathode e	Anode e
5	Cathode d	Anode d
6	Cathode f	Anode f
7	Cathode g	Anode g
8	Common Anode D1	Common Cathode D1
9	Cathode b	Anode b
10	Cathode a	Anode a

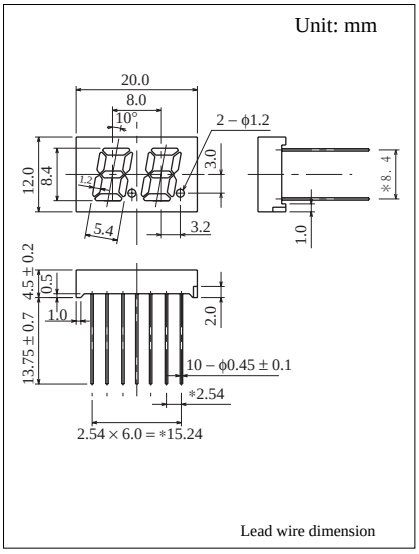

■ Absolute Maximum Ratings (T_a = 25°C)

Lighting Color	P_D(mW)	I_F(mA)	I_{FP}(mA)*	V_R(V)	T_{opr}(°C)	T_{stg}(°C)
Red	32	11	60	5	–25 ~ +80	–30 ~ +85
Green	32	11	60	5	–25 ~ +80	–30 ~ +85

★I_{FP}の条件は, duty 10%, Pulse width 1 msec. The condition of I_{FP} is duty 10%, Pulse width 1 msec

■ Electro–Optical Characteristics (T_a = 25°C)

Conventional Part No.	Lighting Color	Common	I_O / seg		I_O /d.p		V_F		λ_P	$\Delta\lambda$		I_R	
			Typ	Min	Typ	I_F	Typ	Max	Typ	Typ	I_F	Max	V_R
LN523RAMR	Red	Anode	500	200	200	10	2.03	2.8	700	100	10	10	5
LN523RKMR	Red	Cathode	500	200	200	10	2.03	2.8	700	100	10	10	5
LN523GAMG	Green	Anode	1600	600	500	10	2.03	2.8	565	30	10	10	5
LN523GKMG	Green	Cathode	1600	600	500	10	2.03	2.8	565	30	10	10	5
Unit	—	—	µcd	µcd	µcd	mA	V	V	nm	nm	mA	µA	V

I_O — I_F

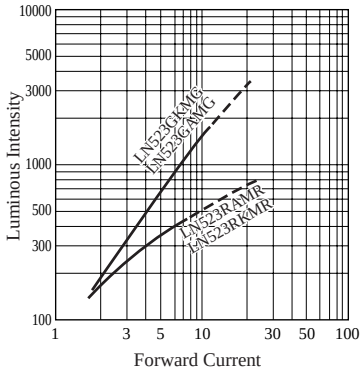

I_F — V_F

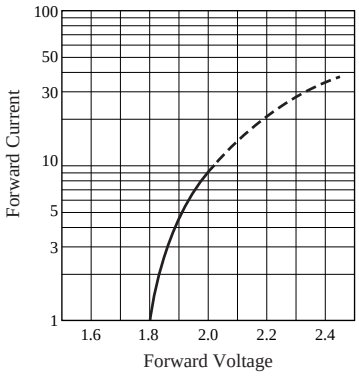
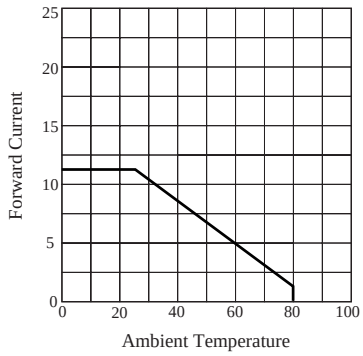
I_F — T_a