Global LCD Panel Exchange Center www.panelook.com 屏库:全球液晶屏交易中心

SPECIFICATION
FOR
APPROVAL

( ) **Preliminary Specification**
(●) **Final Specification**

Title	17.1" WUXGA TFT LCD

BUYER	HP
MODEL	

SUPPLIER	LG Display Co., Ltd.
*MODEL	LP171WU7
Suffix	TLB1

*When you obtain standard approval,
please use the above model name without suffix

APPROVED BY	SIGNATURE
/	
/	
/	

Please return 1 copy for your confirmation with your signature and comments.

APPROVED BY	SIGNATURE
H. S. Kim / S.Manager	
REVIEWED BY	
M. J. Lee / Manager	
PREPARED BY	
S. U. Kim / Engineer	

Product Engineering Dept.
LG Display Co., Ltd

One step solution for LCD / PDP / OLED panel application: Datasheet, inventory and accessory! www.panelook.com

Global LCD Panel Exchange Center www.panelook.com 屏库:全球液晶屏交易中心

Contents

No	ITEM	Page
	COVER	0
	CONTENTS	1
	RECORD OF REVISIONS	2
1	GENERAL DESCRIPTION	3
2	ABSOLUTE MAXIMUM RATINGS	4
3	ELECTRICAL SPECIFICATIONS	
3-1	ELECTRICAL CHARACTREISTICS	5
3-2	INTERFACE CONNECTIONS	7
3-3	LVDS SIGNAL TIMING SPECIFICATIONS	8
3-4	SIGNAL TIMING SPECIFICATIONS	10
3-5	SIGNAL TIMING WAVEFORMS	10
3-6	COLOR INPUT DATA REFERNECE	11
3-7	POWER SEQUENCE	12
4	OPTICAL SFECIFICATIONS	13
5	MECHANICAL CHARACTERISTICS	16
6	RELIABLITY	26
7	INTERNATIONAL STANDARDS	
7-1	SAFETY	27
7-2	EMC	27
7-3	Environment	27
8	PACKING	
8-1	DESIGNATION OF LOT MARK	28
8-2	PACKING FORM	28
9	PRECAUTIONS	29
A	APPENDIX A. Enhanced Extended Display Identification Data	31

One step solution for LCD / PDP / OLED panel application: Datasheet, inventory and accessory! www.panelook.com

Global LCD Panel Exchange Center www.panelook.com 屏库:全球液晶屏交易中心

RECORD OF REVISIONS

Revision No	Revision Date	Page	Description	EDID ver
0.0	10. Jul. 2009	-	First Draft	TBD
0.1	24. Nov. 2009	29.30.31	Update EDID	0.1
0.2	27. Nov. 2009	29.30.31	Update EDID	0.2
0.3	7.Dec. 2009	5	Electrical Characteristics – PWM Frequency	0.2
0.4	12.Dec. 2009	13	Update optical spec.	0.2
0.5	28.Dec. 2009	29.30.31	Update EDID	0.3
1.0	26. Jan. 2010	10	Update timing spec	1.0
		29.30.31	Update EDID	1.0

One step solution for LCD / PDP / OLED panel application: Datasheet, inventory and accessory! www.panelook.com

Global LCD Panel Exchange Center www.panelook.com 屏库:全球液晶屏交易中心

1. General Description

The LP171WU7 is a Color Active Matrix Liquid Crystal Display with an integral LED backlight system. The matrix employs a-Si Thin Film Transistor as the active element. It is a transmissive type display operating in the normally white mode. This TFT-LCD has 17.1 inches diagonally measured active display area with WUXGA resolution(1920 horizontal by 1200 vertical pixel array). Each pixel is divided into Red, Green and Blue sub-pixels or dots which are arranged in vertical stripes. Gray scale or the brightness of the sub-pixel color is determined with a 6-bit gray scale signal for each dot, thus, presenting a palette of more than 262,144 colors.

The LP171WU7 has been designed to apply the interface method that enables low power, high speed, low EMI.

The LP171WU7 is intended to support applications where thin thickness, low power are critical factors and graphic displays are important. In combination with the vertical arrangement of the sub-pixels, the LP171WU7 characteristics provide an excellent flat display for office automation products such as Notebook PC.

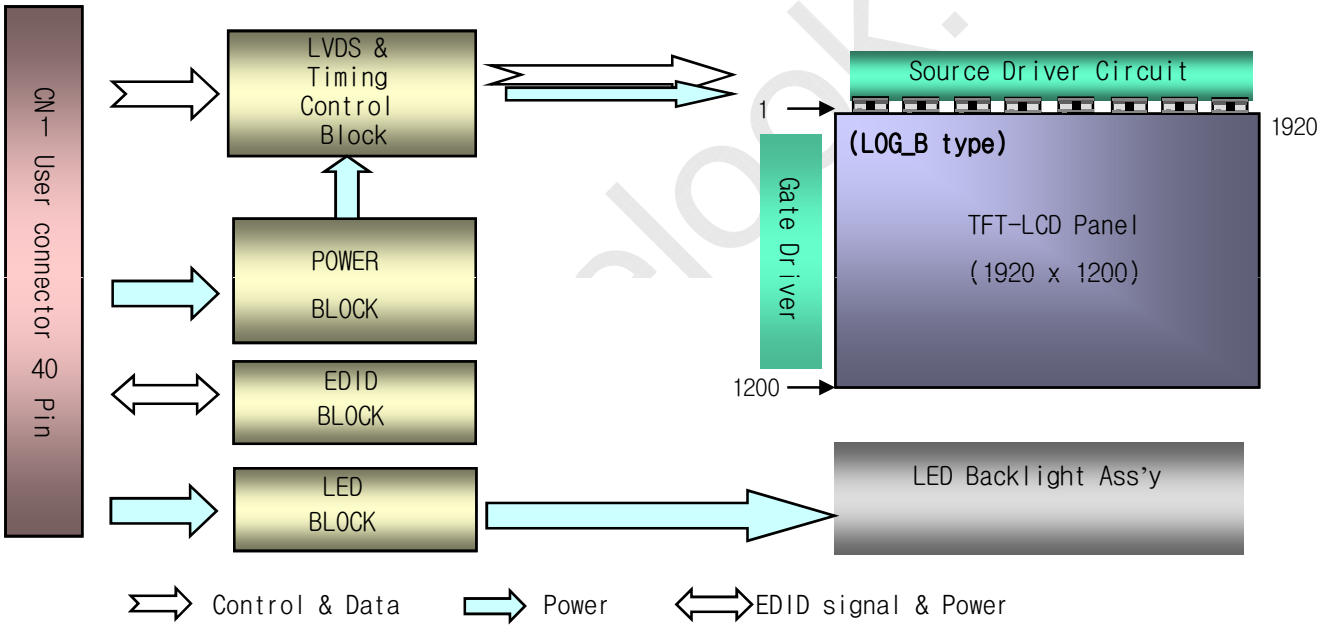

General Features

Active Screen Size	17.1 inches diagonal
Outline Dimension	382.2 (H) × 244.6 (V) × 6.5(D, max.) mm
Pixel Pitch	0.191 mm × 0.191 mm
Pixel Format	1920 horiz. by 1200 vert. Pixels RGB strip arrangement
Color Depth	6-bit, 262,144 colors
Luminance, White	200 cd/m^2(typ., 5 points)
Power Consumption	Total 7 Watt @LCM circuit 1.5 W(Typ.), LED 5.5 W (Typ.)
Weight	700g(Max.)
Display Operating Mode	Transmissive mode, normally white
Surface Treatment	Hard coating(3H), Anti-Glare treatment of the front polarizer
RoHS Comply	Yes
BFR / PVC / As Free	Yes all.

One step solution for LCD / PDP / OLED panel application: Datasheet, inventory and accessory! www.panelook.com

Global LCD Panel Exchange Center www.panelook.com 屏库:全球液晶屏交易中心

2. Absolute Maximum Ratings

The following are maximum values which, if exceeded, may cause faulty operation or damage to the unit.

Table 1. ABSOLUTE MAXIMUM RATINGS

Parameter	Symbol	Values		Units	Notes
		Min	Max		
Power Input Voltage	VCC	-0.3	4.0	Vdc	at 25 ± 5°C
Operating Temperature	TOP	0	50	°C	1
Storage Temperature	HST	-20	60	°C	1
Operating Ambient Humidity	HOP	10	90	%RH	1
Storage Humidity	HST	10	90	%RH	1

Note : 1. Temperature and relative humidity range are shown in the figure below.
Wet bulb temperature should be 39°C Max, and no condensation of water.

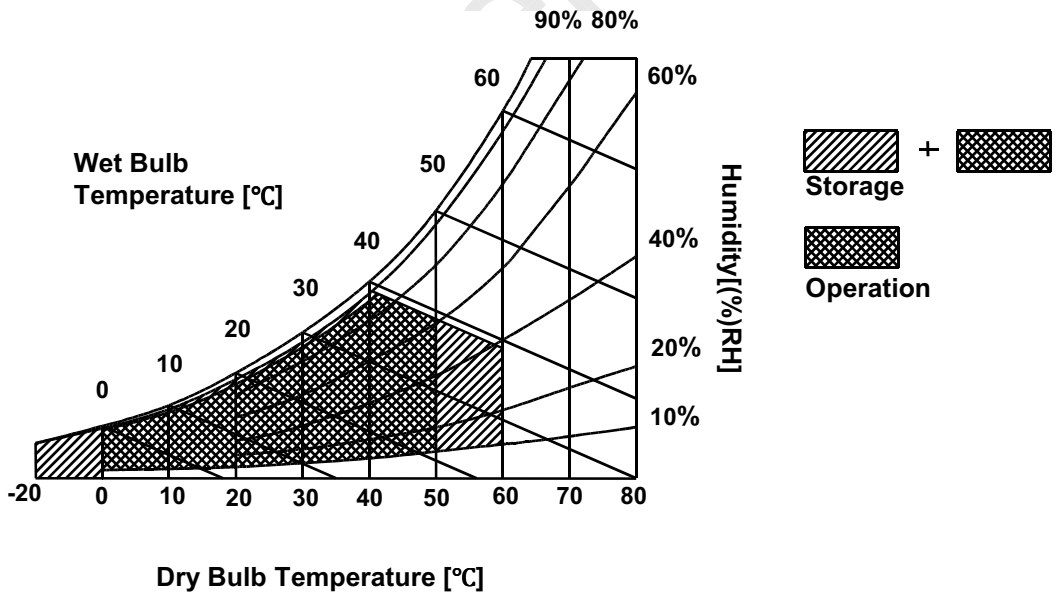

One step solution for LCD / PDP / OLED panel application: Datasheet, inventory and accessory! www.panelook.com

Global LCD Panel Exchange Center www.panelook.com 屏库:全球液晶屏交易中心

3. Electrical Specifications

3-1. Electrical Characteristics

The LP171WU7 requires two power inputs. The first logic is employed to power the LCD electronics and to drive the TFT array and liquid crystal. The second backlight is the input about LED B/L.with LED Driver.

Table 2. ELECTRICAL CHARACTERISTICS

Parameter	Symbol	Values			Unit	Notes
		Min	Typ	Max		
LOGIC :						
Power Supply Input Voltage	V_{CC}	3.0	3.3	3.6	V	1
Power Supply Input Current : Mosaic	I_{CC}	-	452	520	mA	2
Power Consumption	P_{CC}	-	1.5	1.9	W	2
Power Supply Inrush Current	I_{CC_P}	-	-	1500	mA	4
LVDS Impedance	Z_{eDP}	90	100	110	Ω	5
BACKLIGHT : (with LED Driver)						
LED Power Input Voltage	V_{LED}	7.0	12.0	20.0	V	6
LED Power Input Current	I_{LED}	-	460	530	mA	7
LED Power Consumption	P_{LED}	-	5.5	6.36	W	7
LED Power Inrush Current	I_{LED_P}	-		1500	mA	8
PWM Duty Ratio		6	-	100	%	9
PWM Jitter	-	0	-	0.3	%	10
PWM Impedance	Z_{PWM}	20	40	60	kΩ	
PWM Frequency	F_{PWM}	200	-	1700	Hz	11
PWM High Level Voltage	V_{PWM_H}	2.1	3.3	5	V	
PWM Low Level Voltage	V_{PWM_L}	0	-	0.8	V	
LED_EN Impedance	Z_{PWM}	20	40	60	kΩ	
LED_EN High Voltage	$V_{LED_EN_H}$	3.0	-	5.3	V	
LED_EN Low Voltage	$V_{LED_EN_L}$	0	-	0.8	V	
Life Time		12,000	-	-	Hrs	12

One step solution for LCD / PDP / OLED panel application: Datasheet, inventory and accessory! www.panelook.com

Global LCD Panel Exchange Center www.panelook.com 屏库:全球液晶屏交易中心

Note)

1. The measuring position is the connector of LCM and the test conditions are under 25℃, fv = 60Hz, Black pattern.
2. The specified Icc current and power consumption are under the Vcc = 3.3V , 25℃, fv = 60Hz condition whereas Mosaic pattern is displayed and fv is the frame frequency.

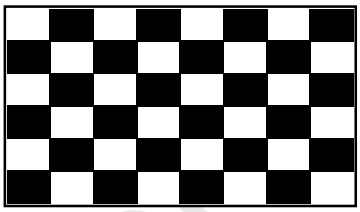

3. This Spec. is the max load condition for the cable impedance designing.
4. The below figures are the measuring Vcc condition and the Vcc control block LGD used. The Vcc condition is same the minimum of T1 at Power on sequence.

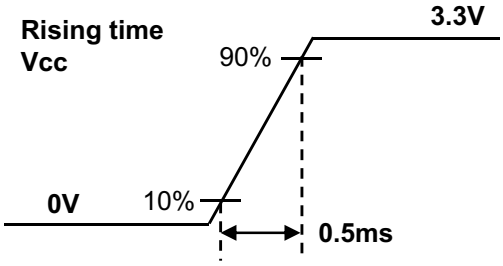

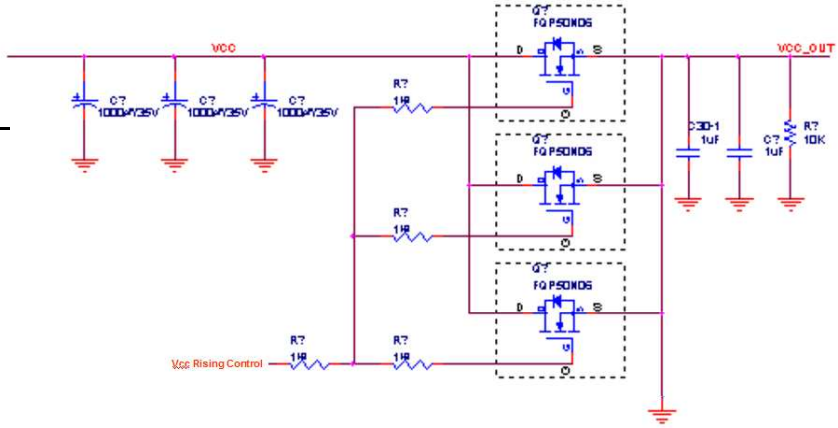

5. This impedance value is needed to proper display and measured form eDP Tx to the mating connector.
6. The measuring position is the connector of LCM and the test conditions are under 25℃.
7. The current and power consumption with LED Driver are under the Vled = 12.0V , 25℃, Dimming of Max luminance whereas White pattern is displayed and fv is the frame frequency.
8. The below figures are the measuring Vled condition and the Vled control block LGD used. VLED control block is same with Vcc control block.

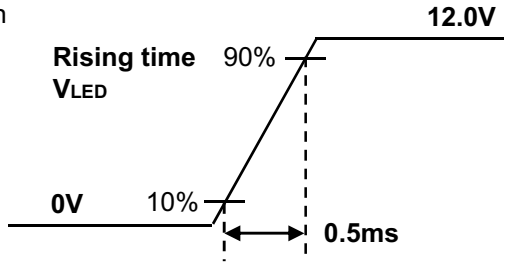

9. The operation of LED Driver below minimum dimming ratio may cause flickering or reliability issue.
10. If Jitter of PWM is bigger than maximum. It may cause flickering.
11. This Spec. is not effective at 100% dimming ratio as an exception because it has DC level equivalent to 0Hz. In spite of acceptable range as defined, the PWM Frequency should be fixed and stable for more consistent brightness control at any specific level desired.
12 The life time is determined as the time at which the typical brightness of LCD is 50% compare to that of initial value at the typical LED current. These LED backlight has 6 strings on it and the typical current of LED's string is base on 23mA.

One step solution for LCD / PDP / OLED panel application: Datasheet, inventory and accessory! www.panelook.com

Global LCD Panel Exchange Center www.panelook.com 屏库:全球液晶屏交易中心

3-2. Interface Connections

This LCD employs two interface connections, a 40 pin connector is used for the module electronics interface and the other connector is used for the integral backlight system.
The electronics interface connector is a model FI-NXB40SL-HF10 manufactured by JAE

Table 3. MODULE CONNECTOR PIN CONFIGURATION (CN1)

Pin	Symbol	Description	Notes
1	NC	No Connection (Reserved for supplier)	[Interface Chip] 1. LCD : SW, SW0617(LCD Controller) Including LVDS Receiver. 2. System : SiWLVDSRx or equivalent * Pin to Pin compatible with LVDS [Connector] JAE, FI-NXB40SL-HF10 (Locking type) or equivalent [Mating Connector] FI-NX400L or equivalent [Connector pin arrangement] 40 1
2	VCC	Power Supply, 3.3V (typical)	
3	VCC	Power Supply, 3.3V (typical)	
4	V_EEDID	DDC 3.3V power	
5	NC	No Connection	
6	CLK EEDID	DDC Clock	
7	DATA EEDID	DDC Data	
8	Odd Rin0-	- LVDS differential data input (R0-R5, G0)	
9	Odd Rn0+	+ LVDS differential data input (R0-R5, G0)	
10	GND	Ground	
11	Odd Rin1-	- LVDS differential data input (G1-G5, B0-B1)	
12	Odd Rn1+	+ LVDS differential data input (G1-G5, B0-B1)	
13	GND	Ground	
14	Odd Rin2-	- LVDS differential data input (B2-B5,HS,VS, DE)	
15	Odd Rn2+	+ LVDS differential data input (B2-B5,HS,VS, DE)	
16	GND	Ground	
17	Odd ClkIN-	- LVDS differential clock input	
18	Odd ClkIN+	+ LVDS differential clock input	
19	GND	Ground	
20	Even Rin0-	- LVDS differential data input (R0-R5, G0)	
21	Even Rn0+	+ LVDS differential data input (R0-R5, G0)	
22	GND	Ground	
23	Even Rin1-	- LVDS differential data input (G1-G5, B0-B1)	
24	Even Rn1+	+ LVDS differential data input (G1-G5, B0-B1)	
25	GND	Ground	
26	Even Rin2-	- LVDS differential data input (B2-B5,HS,VS, DE)	
27	Even Rn2+	+ LVDS differential data input (B2-B5,HS,VS, DE)	
28	GND	Ground	
29	Even ClkIN-	- LVDS differential clock input	
30	Even ClkIN+	+ LVDS differential clock input	
31	GND	LED Ground	
32	GND	LED Ground	
33	GND	LED Ground	
34	NC	No Connection (Reserved for supplier)	
35	VLED	LED Power Supply 6V-20V	
36	VLED	LED Power Supply 6V-20V	
37	VLED	LED Power Supply 6V-20V	
38	PWM	PWM for luminance control	
39	LED_EN	BL On/Off	
40	NC	No Connection (Reserved for supplier)	

One step solution for LCD / PDP / OLED panel application: Datasheet, inventory and accessory! www.panelook.com

Global LCD Panel Exchange Center www.panelook.com 屏库:全球液晶屏交易中心

3-3. LVDS Signal Timing Specifications

3-3-1. DC Specification

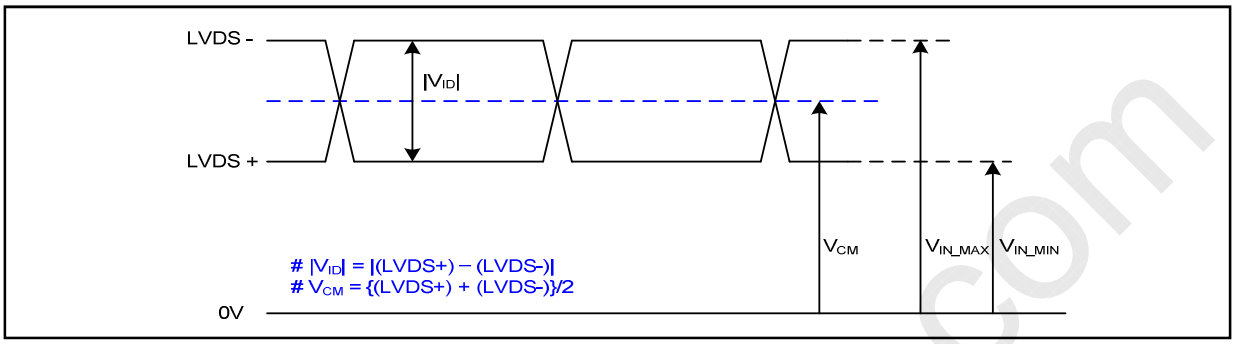

Description	Symbol	Min	Max	Unit	Notes
LVDS Differential Voltage	$\|V_{ID}\|$	100	600	mV	-
LVDS Common mode Voltage	V_{CM}	0.6	1.8	V	-
LVDS Input Voltage Range	V_{IN}	0.3	2.1	V	-

3-3-2. AC Specification

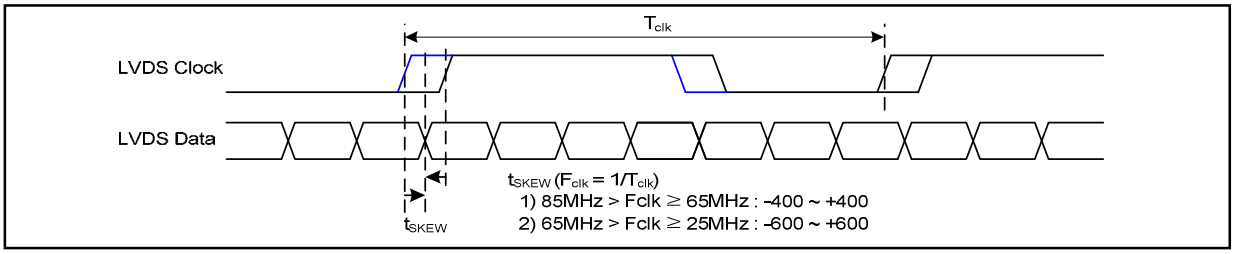

Description	Symbol	Min	Max	Unit	Notes
LVDS Clock to Data Skew Margin	t_{SKEW}	- 400	+ 400	ps	85MHz > Fclk ≥ 65MHz
	t_{SKEW}	- 600	+ 600	ps	65MHz > Fclk ≥ 25MHz
LVDS Clock to Clock Skew Margin (Even to Odd)	t_{SKEW_EO}	- 1/7	+ 1/7	T_{clk}	-
Maximum deviation of input clock frequency during SSC	F_{DEV}	-	± 3	%	-
Maximum modulation frequency of input clock during SSC	F_{MOD}	-	200	KHz	-

One step solution for LCD / PDP / OLED panel application: Datasheet, inventory and accessory! www.panelook.com

Global LCD Panel Exchange Center www.panelook.com 屏库:全球液晶屏交易中心

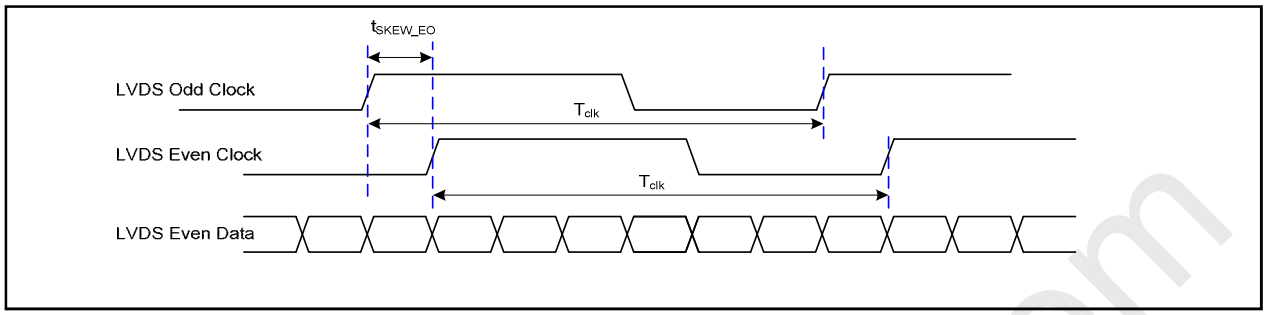

< Clock skew margin between channel >

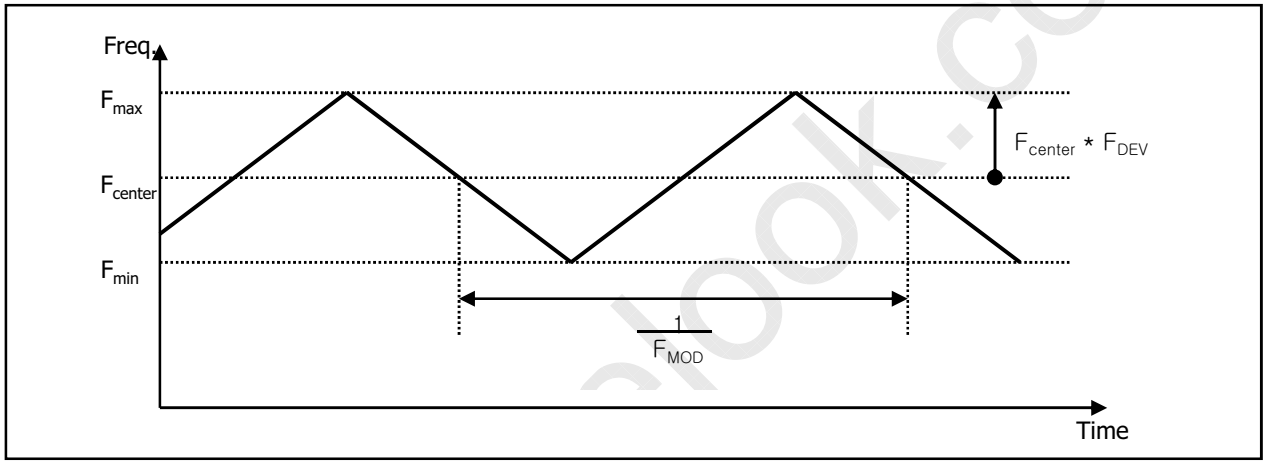

< Spread Spectrum >

3-3-3. Data Format

1) LVDS 2 Port

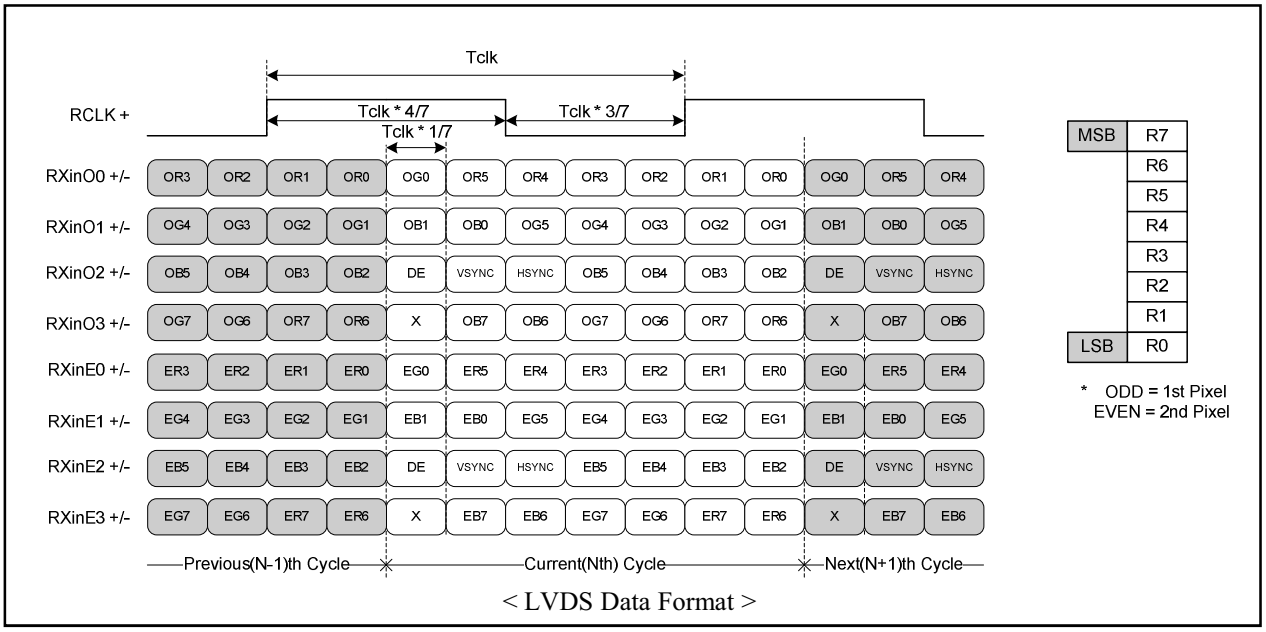

< LVDS Data Format >

One step solution for LCD / PDP / OLED panel application: Datasheet, inventory and accessory! www.panelook.com

Global LCD Panel Exchange Center www.panelook.com 屏库:全球液晶屏交易中心

3-4. Signal Timing Specifications

This is the signal timing required at the input of the User connector. All of the interface signal timing should be satisfied with the following specifications and specifications of LVDS Tx/Rx for its proper operation.

Table 5. TIMING TABLE

ITEM	Symbol		Min.	Typ.	Max.	Unit	Note
DCLK	Frequency	f_{CLK}	-	152	-	MHz	
Hsync	Period	t_{HP}	2038	2050	2062	tCLK	
	Width	t_{WH}	30	32	34		
	Width-Active	tw_{HA}	1920	1920	1920		
Vsync	Period	t_{VP}	1229	1235	1241	tHP	
	Width	t_{WV}	4	6	8		
	Width-Active	tw_{VA}	1200	1200	1200		
Data Enable	Horizontal back porch	t_{HBP}	45	50	55	tCLK	
	Horizontal front porch	t_{HFP}	43	48	53		
	Vertical back porch	t_{VBP}	24	26	28	tHP	
	Vertical front porch	t_{VFP}	1	3	5		

3-5. Signal Timing Waveforms

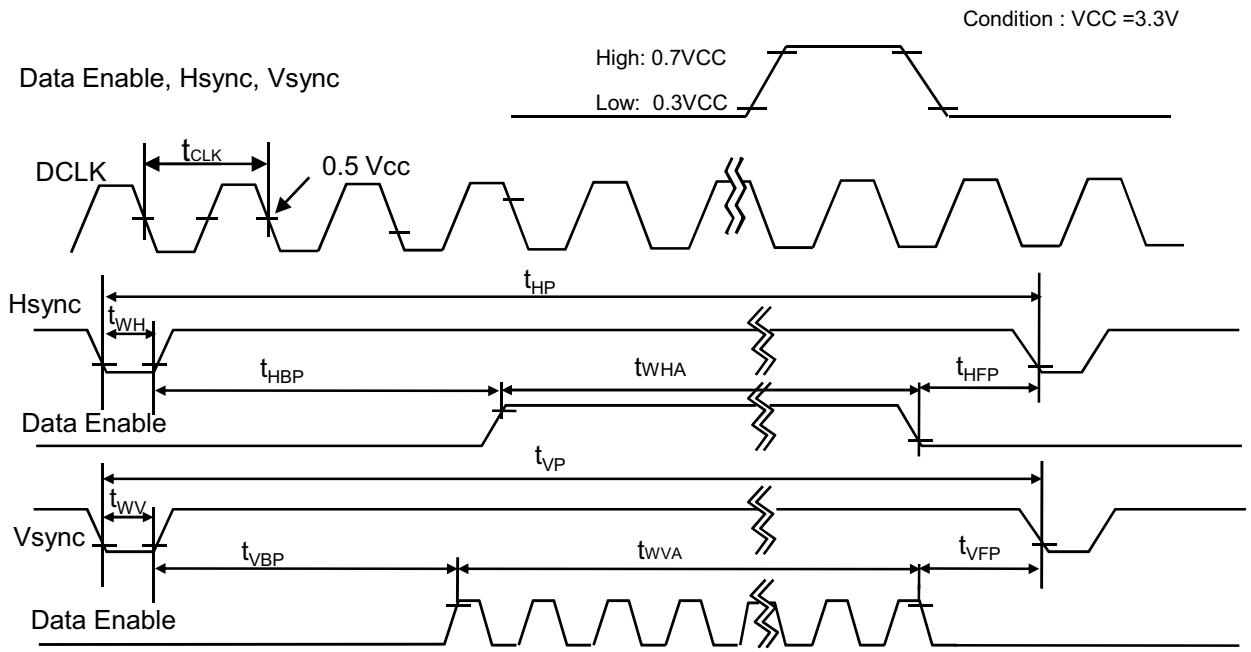

One step solution for LCD / PDP / OLED panel application: Datasheet, inventory and accessory! www.panelook.com

Global LCD Panel Exchange Center www.panelook.com 屏库:全球液晶屏交易中心

3-6. Color Input Data Reference

The brightness of each primary color (red,green and blue) is based on the 6-bit gray scale data input for the color ; the higher the binary input, the brighter the color. The table below provides a reference for color versus data input.

Table 6. COLOR DATA REFERENCE

Color		Input Color Data																	
		RED						GREEN						BLUE					
		MSB					LSB	MSB					LSB	MSB					LSB
		R 5	R 4	R 3	R 2	R 1	R 0	G 5	G 4	G 3	G 2	G 1	G 0	B 5	B 4	B 3	B 2	B 1	B 0
Basic Color	Black	0	0	0	0	0	0	0	0	0	0	0	0	0	0	0	0	0	0
	Red	1	1	1	1	1	1	0	0	0	0	0	0	0	0	0	0	0	0
	Green	0	0	0	0	0	0	1	1	1	1	1	1	0	0	0	0	0	0
	Blue	0	0	0	0	0	0	0	0	0	0	0	0	1	1	1	1	1	1
	Cyan	0	0	0	0	0	0	1	1	1	1	1	1	1	1	1	1	1	1
	Magenta	1	1	1	1	1	1	0	0	0	0	0	0	1	1	1	1	1	1
	Yellow	1	1	1	1	1	1	1	1	1	1	1	1	0	0	0	0	0	0
	White	1	1	1	1	1	1	1	1	1	1	1	1	1	1	1	1	1	1
RED	RED (00)	0	0	0	0	0	0	0	0	0	0	0	0	0	0	0	0	0	0
	RED (01)	0	0	0	0	0	1	0	0	0	0	0	0	0	0	0	0	0	0
	…				…						…						…		
	RED (62)	1	1	1	1	1	0	0	0	0	0	0	0	0	0	0	0	0	0
	RED (63)	1	1	1	1	1	1	0	0	0	0	0	0	0	0	0	0	0	0
GREEN	GREEN (00)	0	0	0	0	0	0	0	0	0	0	0	0	0	0	0	0	0	0
	GREEN (01)	0	0	0	0	0	0	0	0	0	0	0	1	0	0	0	0	0	0
	...				...						...						...		
	GREEN (62)	0	0	0	0	0	0	1	1	1	1	1	0	0	0	0	0	0	0
	GREEN (63)	0	0	0	0	0	0	1	1	1	1	1	1	0	0	0	0	0	0
BLUE	BLUE (00)	0	0	0	0	0	0	0	0	0	0	0	0	0	0	0	0	0	0
	BLUE (01)	0	0	0	0	0	0	0	0	0	0	0	0	0	0	0	0	0	1
	…				…						…						…		
	BLUE (62)	0	0	0	0	0	0	0	0	0	0	0	0	1	1	1	1	1	0
	BLUE (63)	0	0	0	0	0	0	0	0	0	0	0	0	1	1	1	1	1	1

One step solution for LCD / PDP / OLED panel application: Datasheet, inventory and accessory! www.panelook.com

Global LCD Panel Exchange Center www.panelook.com 屏库:全球液晶屏交易中心

3-7. Power Sequence

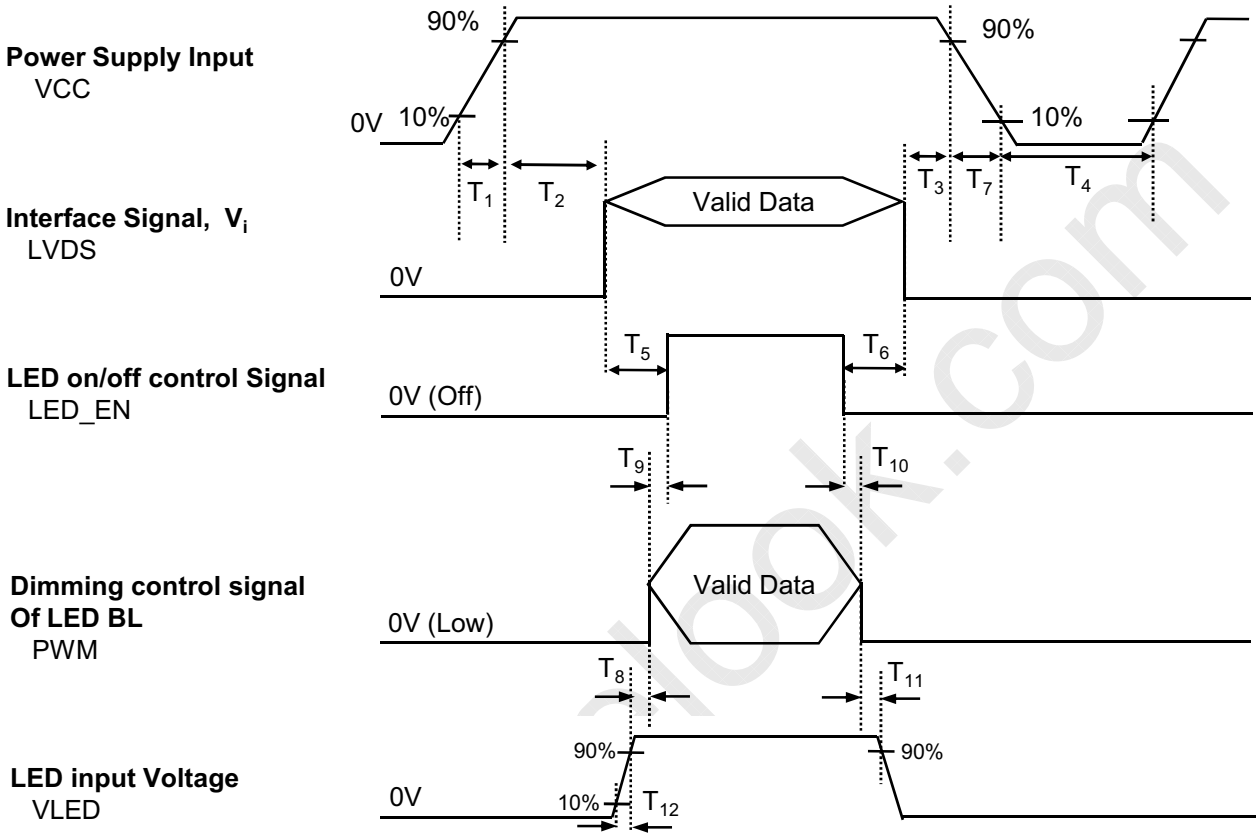

Table 6. POWER SEQUENCE TABLE

Logic Parameter	Value			Units	LED Parameter	Value			Units
	Min.	Typ.	Max.			Min.	Typ.	Max.	
T_1	0.5	-	10	ms	T_8	10	-	-	ms
T_2	0	-	50	ms	T_9	0	-	-	ms
T_3	0	-	50	ms	T_{10}	0	-	-	ms
T_4	400	-	-	ms	T_{11}	10	-	-	ms
T_5	200	-	-	ms	T_{12}	0.5	-	-	ms
T_6	200	-	-	ms					
T_7	3	-	10	ms					

Note)
1. Do not insert the mating cable when system turn on.
2. Valid Data have to meet "3-3. LVDS Signal Timing Specifications"
3. LVDS, LED_EN and PWM need to pull-down condition on invalid status.
4. LGD recommend the rising sequence of VLED after the Vcc and valid status of LVDS turn on.

One step solution for LCD / PDP / OLED panel application: Datasheet, inventory and accessory! www.panelook.com

Global LCD Panel Exchange Center www.panelook.com 屏库:全球液晶屏交易中心

4. Optical Specification

Optical characteristics are determined after the unit has been 'ON' and stable for approximately 20 minutes in a dark environment at 25°C. The values specified are at an approximate distance 50cm from the LCD surface at a viewing angle of Φ and Θ equal to 0°.
FIG. 1 presents additional information concerning the measurement equipment and method.

FIG. 1 Optical Characteristic Measurement Equipment and Method

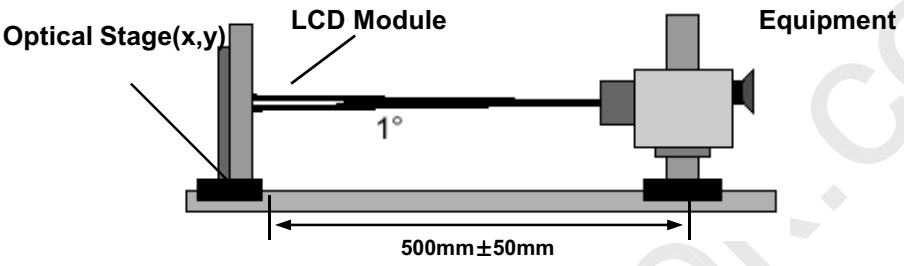

Table 8. OPTICAL CHARACTERISTICS

Ta=25°C, VCC=3.3V, fv=60Hz, f_{CLK}= 152 MHz, ILED =23 mA

Parameter	Symbol	Values			Units	Notes
		Min	Typ	Max		
Contrast Ratio	CR	300	400	-		1
Surface Luminance, white	L_{WH}	170	200	-	cd/m²	2
Luminance Variation	δ_{WHITE}		1.4	1.6		3
Response Time	$Tr_R + Tr_D$	-	16	25	ms	4
Color Coordinates						
RED	RX	0.565	0.595	0.625		
	RY	0.320	0.350	0.380		
GREEN	GX	0.310	0.340	0.370		
	GY	0.548	0.578	0.608		
BLUE	BX	0.126	0.156	0.186		
	BY	0.075	0.105	0.135		
WHITE	WX	0.283	0.313	0.343		
	WY	0.299	0.329	0.359		
Viewing Angle						5
x axis, right(Φ=0°)	Θr	60	65	-	degree	
x axis, left (Φ=180°)	Θl	60	65	-	degree	
y axis, up (Φ=90°)	Θu	50	55	-	degree	
y axis, down (Φ=270°)	Θd	50	55	-	degree	
Gray Scale						6
Color Gamut	C/G	-	50	-	%	

One step solution for LCD / PDP / OLED panel application: Datasheet, inventory and accessory! www.panelook.com

Global LCD Panel Exchange Center www.panelook.com 屏库:全球液晶屏交易中心

Note)

1. Contrast Ratio(CR) is defined mathematically as

$$\text{Contrast Ratio} = \frac{\text{Surface Luminance with all white pixels}}{\text{Surface Luminance with all black pixels}}$$

2. Surface luminance is the average of 5 point across the LCD surface 50cm from the surface with all pixels displaying white. For more information see FIG 1.

LWH = Average(L1,L2, … L5)

3. The variation in surface luminance , The panel total variation (δ WHITE) is determined by measuring LN at each test position 1 through 13 and then defined as followed numerical formula. For more information see FIG 2.

$$\delta\ \text{WHITE}(= \frac{\text{Maximum(L1,L2, … L13)}}{\text{Minimum(L1,L2, … L13)}}$$

4. Response time is the time required for the display to transition from white to black (rise time, TrR) and from black to white(Decay Time, TrD). For additional information see FIG 3.

5. Viewing angle is the angle at which the contrast ratio is greater than 10. The angles are determined for the horizontal or x axis and the vertical or y axis with respect to the z axis which is normal to the LCD surface. For more information see FIG 4.

6. Gray scale specification * fV = 60Hz

Gray Level	Luminance [%] (Typ)
L0	0.13
L7	1.85
L15	6.78
L23	43.87
L31	23.79
L39	39.39
L47	59.38
L55	80.83
L63	100

One step solution for LCD / PDP / OLED panel application: Datasheet, inventory and accessory! www.panelook.com

Global LCD Panel Exchange Center www.panelook.com 屏库:全球液晶屏交易中心

FIG. 2 Luminance

<Measuring point for Average Luminance & measuring point for Luminance variation>

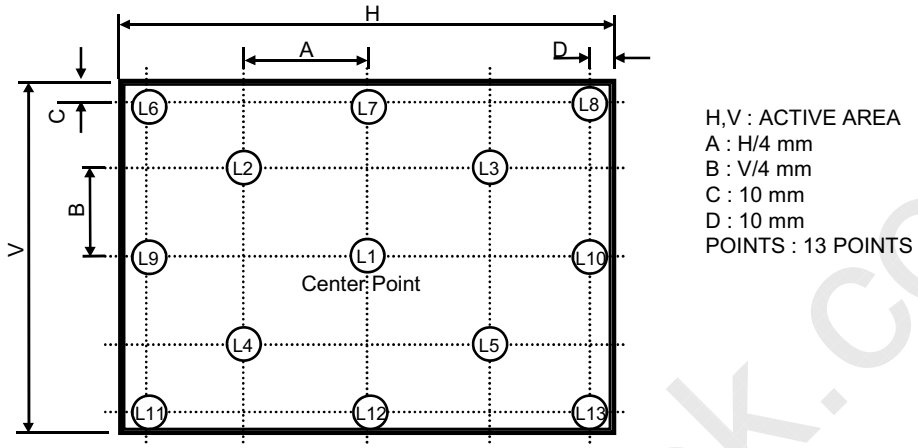

FIG. 3 Response Time

The response time is defined as the following figure and shall be measured by switching the input signal for "black" and "white".

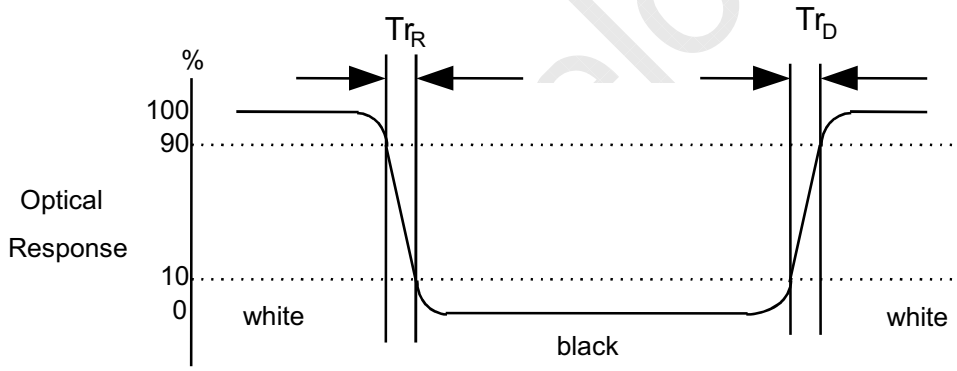

FIG. 4 Viewing angle

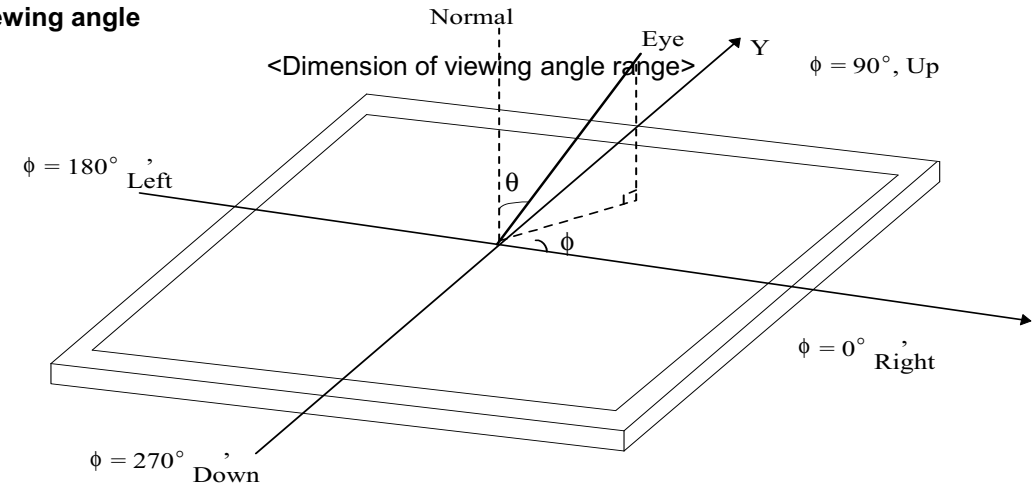

One step solution for LCD / PDP / OLED panel application: Datasheet, inventory and accessory! www.panelook.com

Global LCD Panel Exchange Center www.panelook.com 屏库:全球液晶屏交易中心

5. Mechanical Characteristics

The contents provide general mechanical characteristics for the model LP171WU7.
In addition the figures in the next page are detailed mechanical drawing of the LCD.

Outline Dimension	Horizontal	382.2 ± 0.5mm
	Vertical	244.6 ± 0.5mm
	Thickness	6.5mm (max)
Bezel Area	Horizontal	370.6 ± 0.5mm
	Vertical	232.9 ± 0.5mm
Active Display Area	Horizontal	367.2 mm
	Vertical	229.5 mm
Weight	700g (Max.)	
Surface Treatment	Hard Coating (3H), Anti-Glare treatment of the front polarizer	

One step solution for LCD / PDP / OLED panel application: Datasheet, inventory and accessory! www.panelook.com

Global LCD Panel Exchange Center www.panelook.com 屏库:全球液晶屏交易中心

<FRONT VIEW>

Note) Unit:[mm], General tolerance: ± 0.5mm

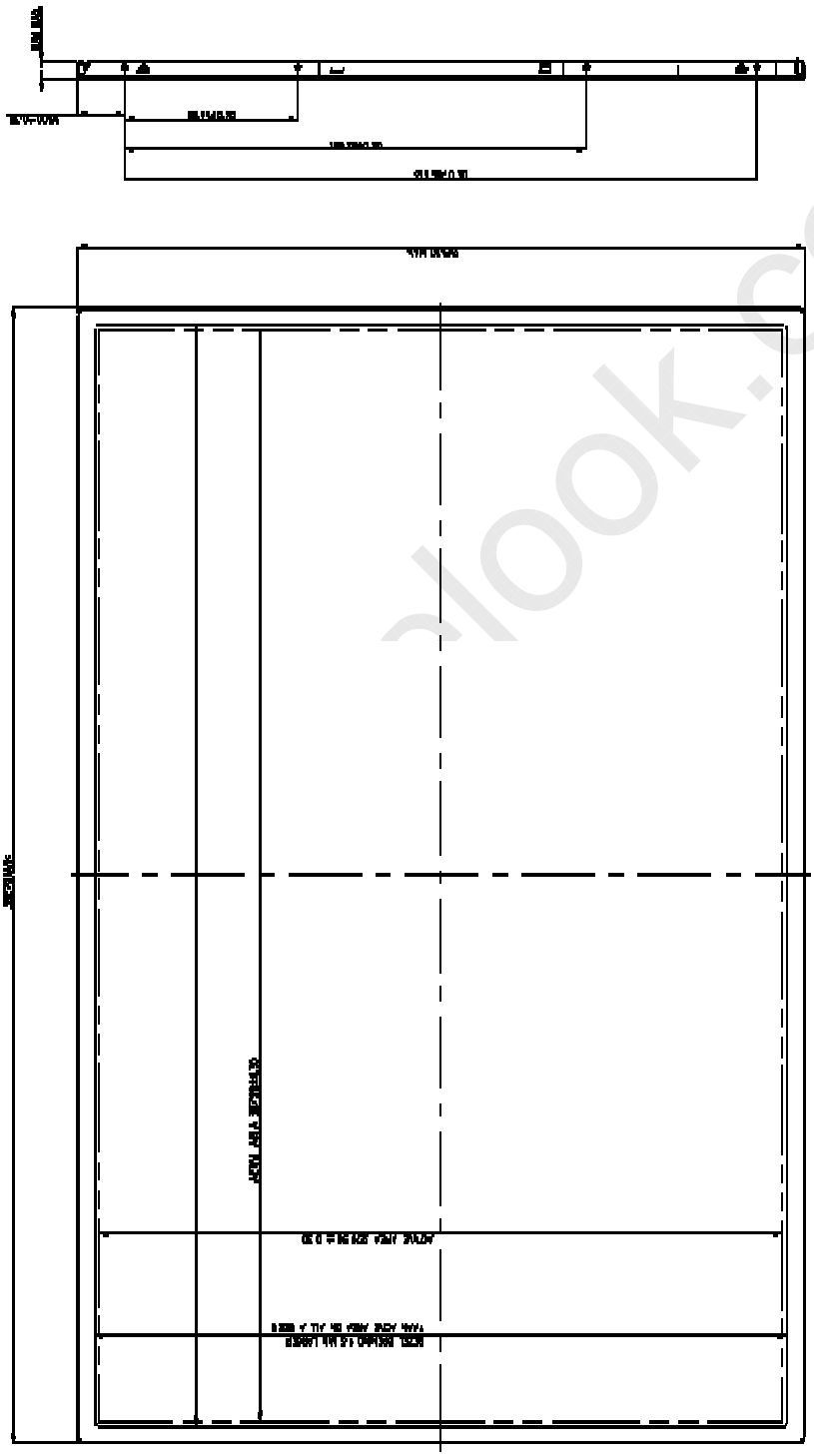

One step solution for LCD / PDP / OLED panel application: Datasheet, inventory and accessory! www.panelook.com

Global LCD Panel Exchange Center www.panelook.com 屏库:全球液晶屏交易中心

<REAR VIEW>

Note) Unit:[mm], General tolerance: ± 0.5mm

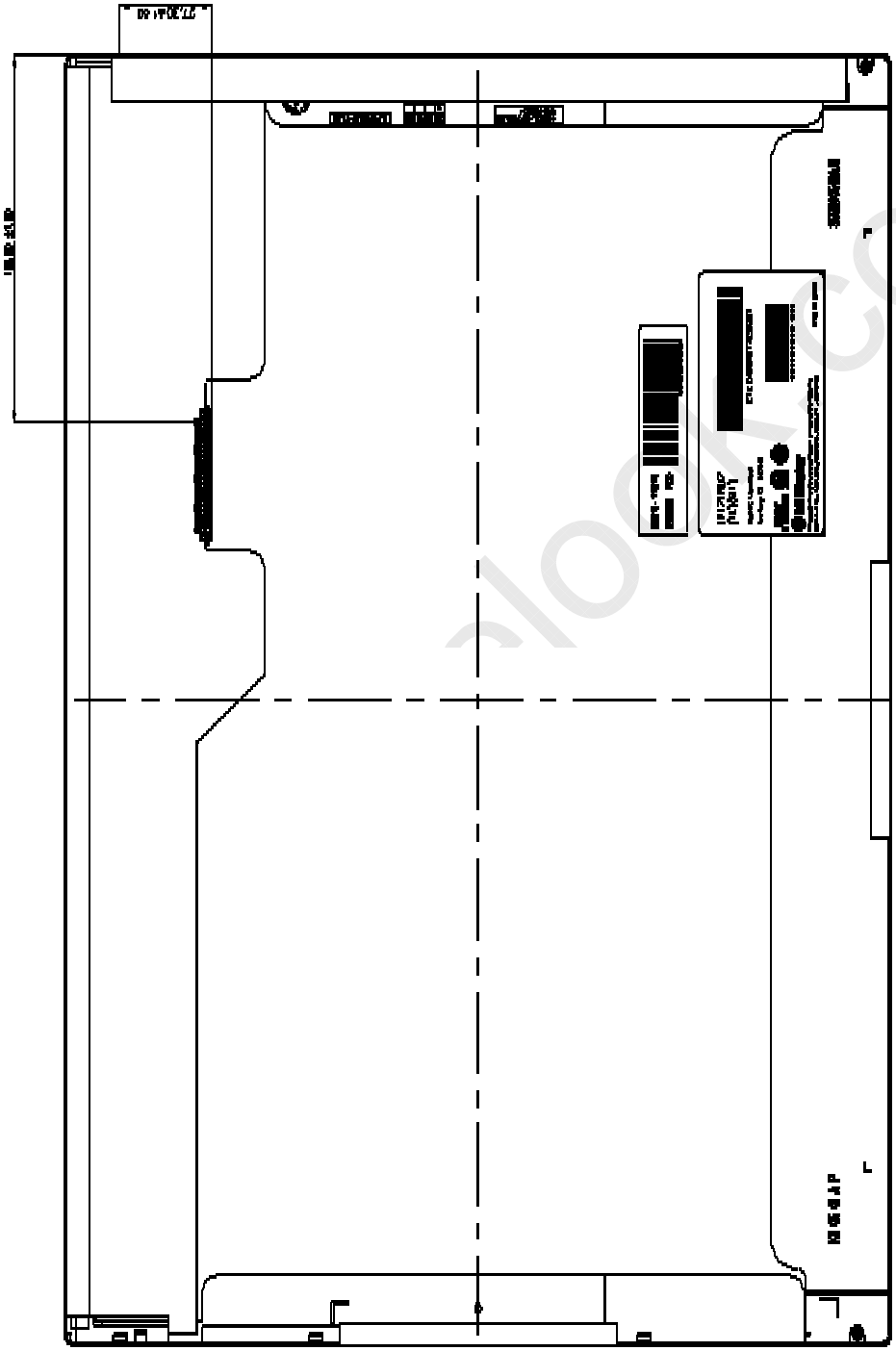

One step solution for LCD / PDP / OLED panel application: Datasheet, inventory and accessory! www.panelook.com

Global LCD Panel Exchange Center www.panelook.com 屏库:全球液晶屏交易中心

[DETAIL DESCRIPTION OF SIDE MOUNTING SCREW]

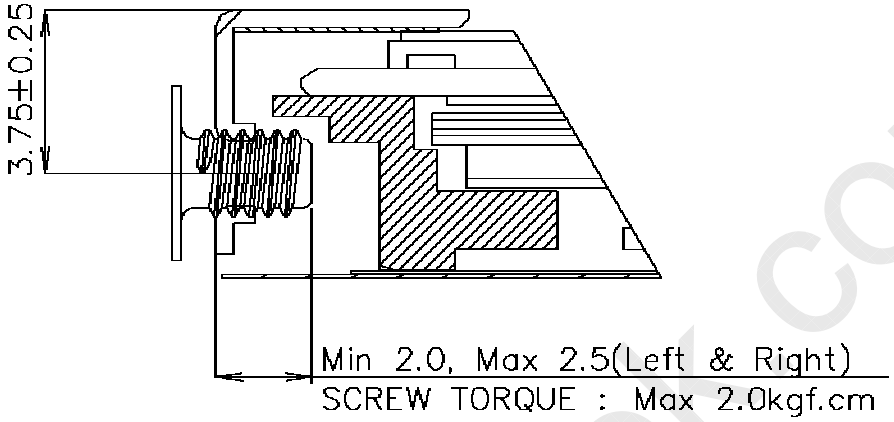

One step solution for LCD / PDP / OLED panel application: Datasheet, inventory and accessory! www.panelook.com

Global LCD Panel Exchange Center www.panelook.com 屏库:全球液晶屏交易中心

Backlight Exploded View. (Appendix)

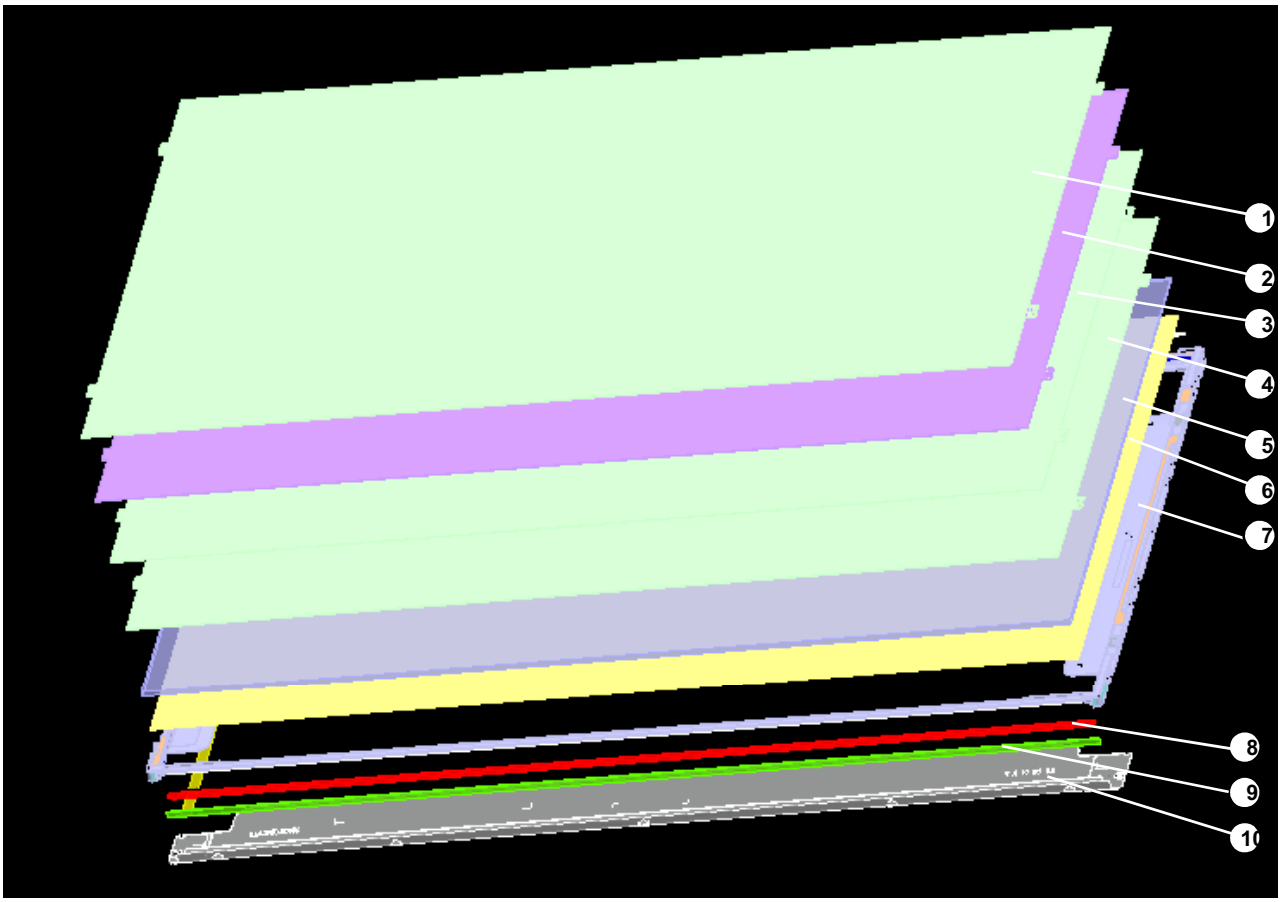

No	Part Name	No	Part Name
1	Diffuser Up Sheet	6	Reflector
2	Prism Up Sheet	7	Support Main
3	Prism Down Sheet	8	LED Housing
4	Diffuser Down Sheet	9	LED Array
5	Light Guide Panel	10	Cover Bottom

One step solution for LCD / PDP / OLED panel application: Datasheet, inventory and accessory! www.panelook.com

Global LCD Panel Exchange Center www.panelook.com 屏库:全球液晶屏交易中心

LGD Proposal for system cover design.(Appendix)

1	Gap check for securing the enough gap between LCM and System cover.	

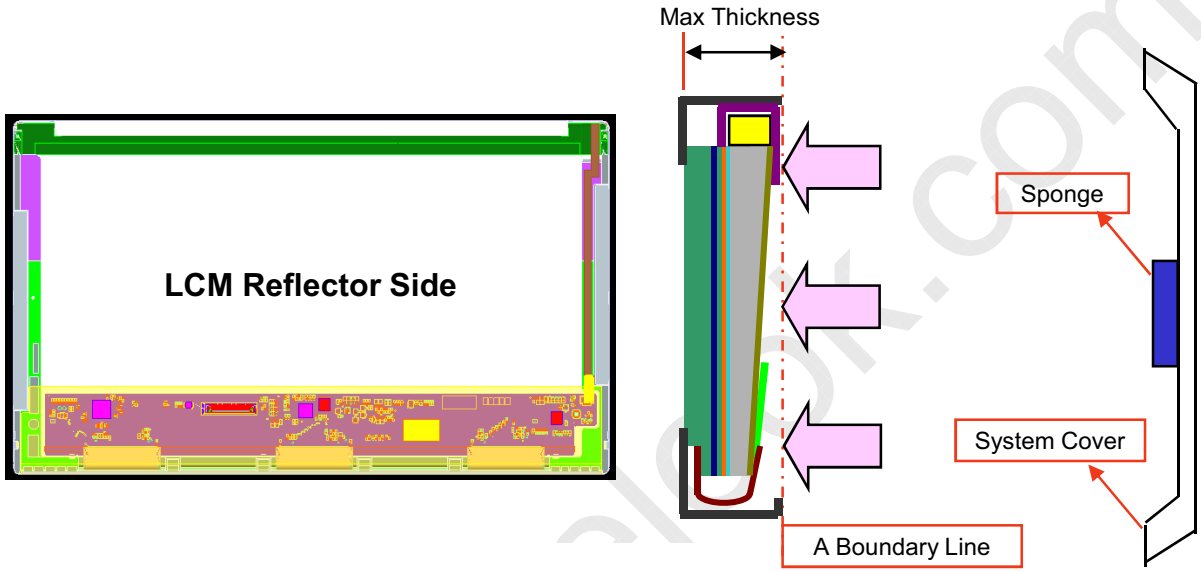

Define	1.Rear side of LCM is sensitive against external stress,and previous check about interference is highly needed. 2.In case there is something from system cover comes into the boundary above,mechanical interference may cause the FOS defects. (Eg:Ripple,White spot..)
2	Check if antenna cable is sufficiently apart from T-CON of LCD Module.
Define	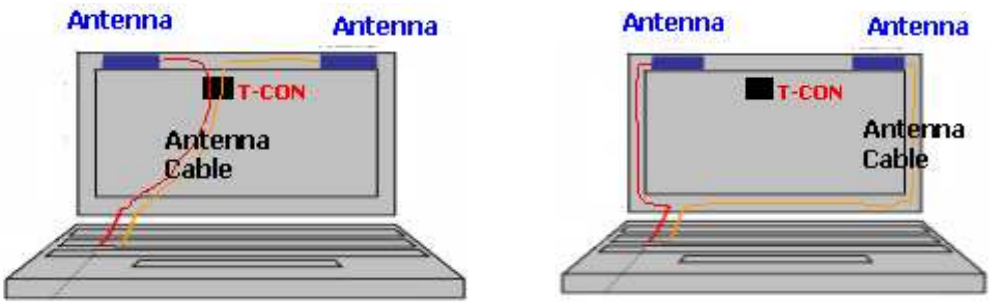
	1.If system antenna is overlapped with T-CON,it might be cause the noise.

One step solution for LCD / PDP / OLED panel application: Datasheet, inventory and accessory! www.panelook.com

Global LCD Panel Exchange Center www.panelook.com 屏库:全球液晶屏交易中心

LGD Proposal for system cover design.

3	Gap check for securing the enough gap between LCM and System hinge.	

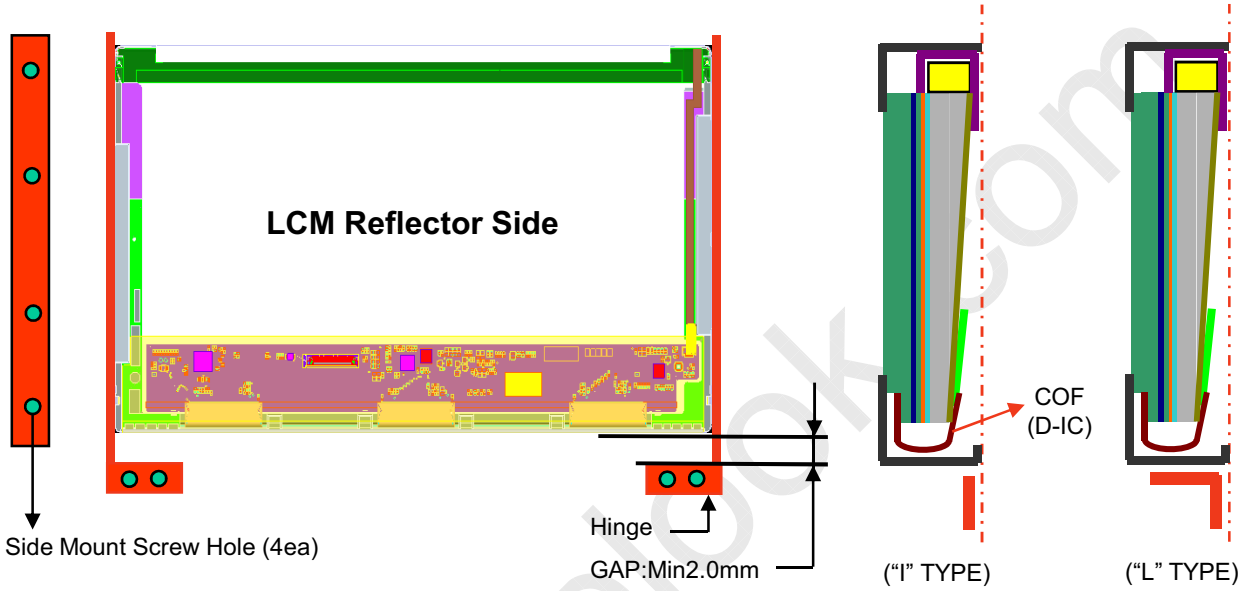

Define	1.At least 2.0mm of gap needs to be secured to prevent the shock related defects. 2."L" type of hinge is recommended than "I" type under shock test.
4	Checking the path of the System wire.

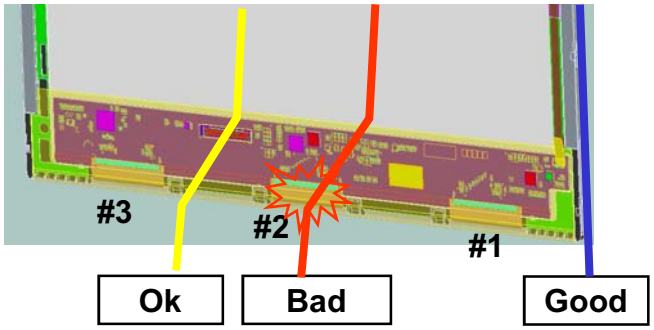

Define	1.COF area needs to be handled with care. 2.GOOD ➔Wire path design to system side. OK➔ Wire path is located between COFs. BAD➔Wire path overlapped with COF area.

One step solution for LCD / PDP / OLED panel application: Datasheet, inventory and accessory! www.panelook.com

Global LCD Panel Exchange Center www.panelook.com 屏库:全球液晶屏交易中心

LGD Proposal for system cover design.

5	Using a bracket on the top of LCM is not recommended.	

bracket

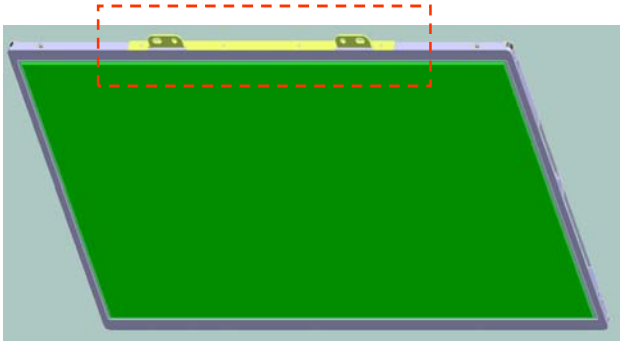

With bracket

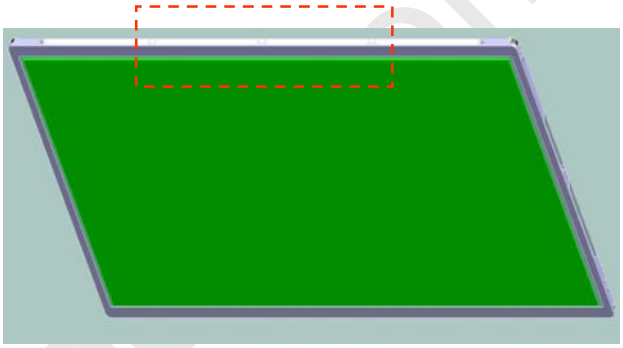

Without bracket

Define	1.Condition without bracket is good for mechanical noise,and can minimize the light leakage from deformation of bracket. 2.The results shows that there is no difference between the condition with or without bracket.
6	Securing additional gap on CNT area..

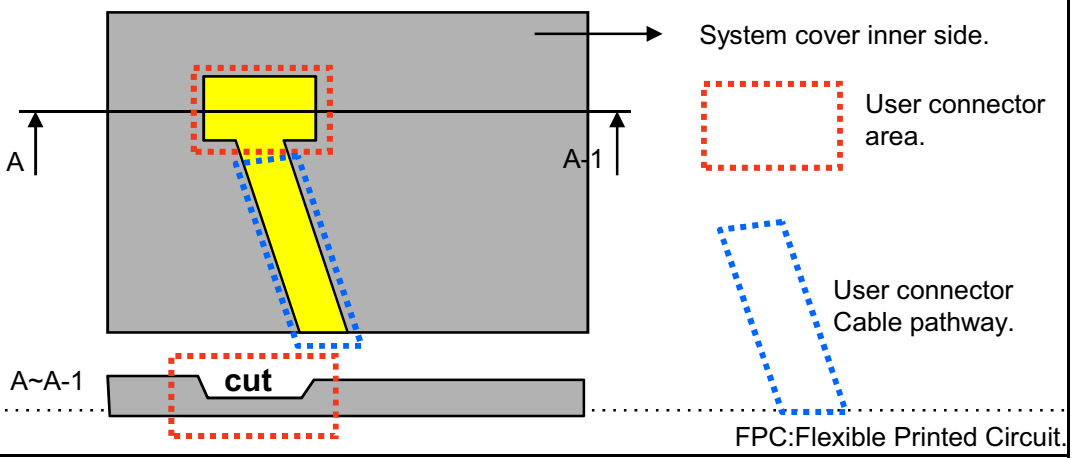

Define	1.CNT area is specially sensitive against external stress,and additional gap by cutting on system cover will be helpful on removing the Ripple. 2.Using a thinner CNT will be better. (eg: FPC type)

One step solution for LCD / PDP / OLED panel application: Datasheet, inventory and accessory! www.panelook.com

Global LCD Panel Exchange Center www.panelook.com 屏库:全球液晶屏交易中心

7	Checking the path of the System LVDS Cable.

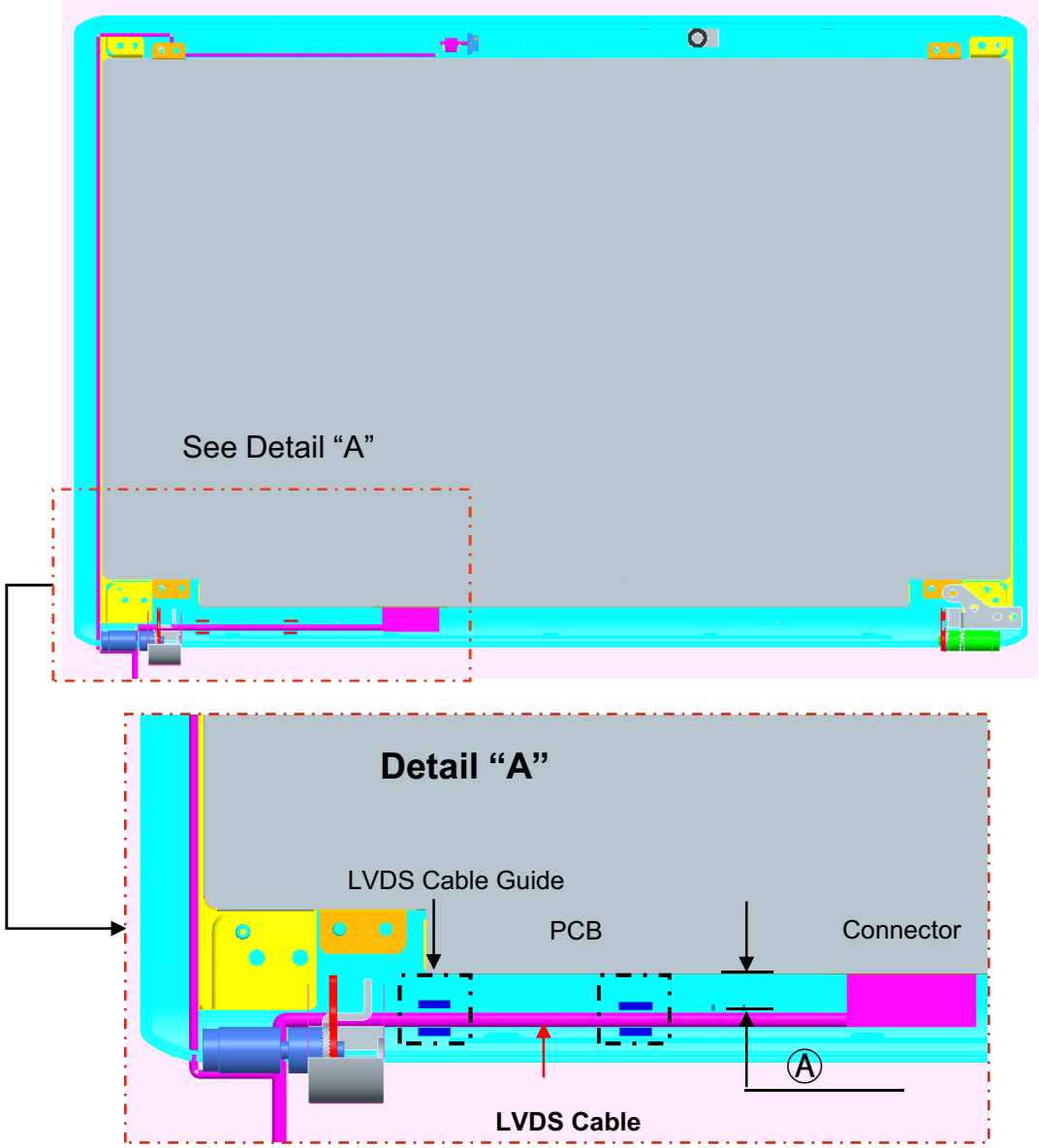

Define	1.At least 1.0mm of gap needs to be secured to prevent the overlap between LVDS cable and PCB.(Ⓐ ≥ 1.0mm) (This overlap may cause a Abnormal Display after hinge test)
	2."Flat" type of LVDS cable is recommended than "Cylinderical" type . 3. Making LVDS Cable Guide will be better.(Refer to detail "A")

One step solution for LCD / PDP / OLED panel application: Datasheet, inventory and accessory! www.panelook.com

Global LCD Panel Exchange Center www.panelook.com 屏库:全球液晶屏交易中心

LGD Proposal for system cover design.

8	Securing additional gap between front cover & LCD at edge of front cover.

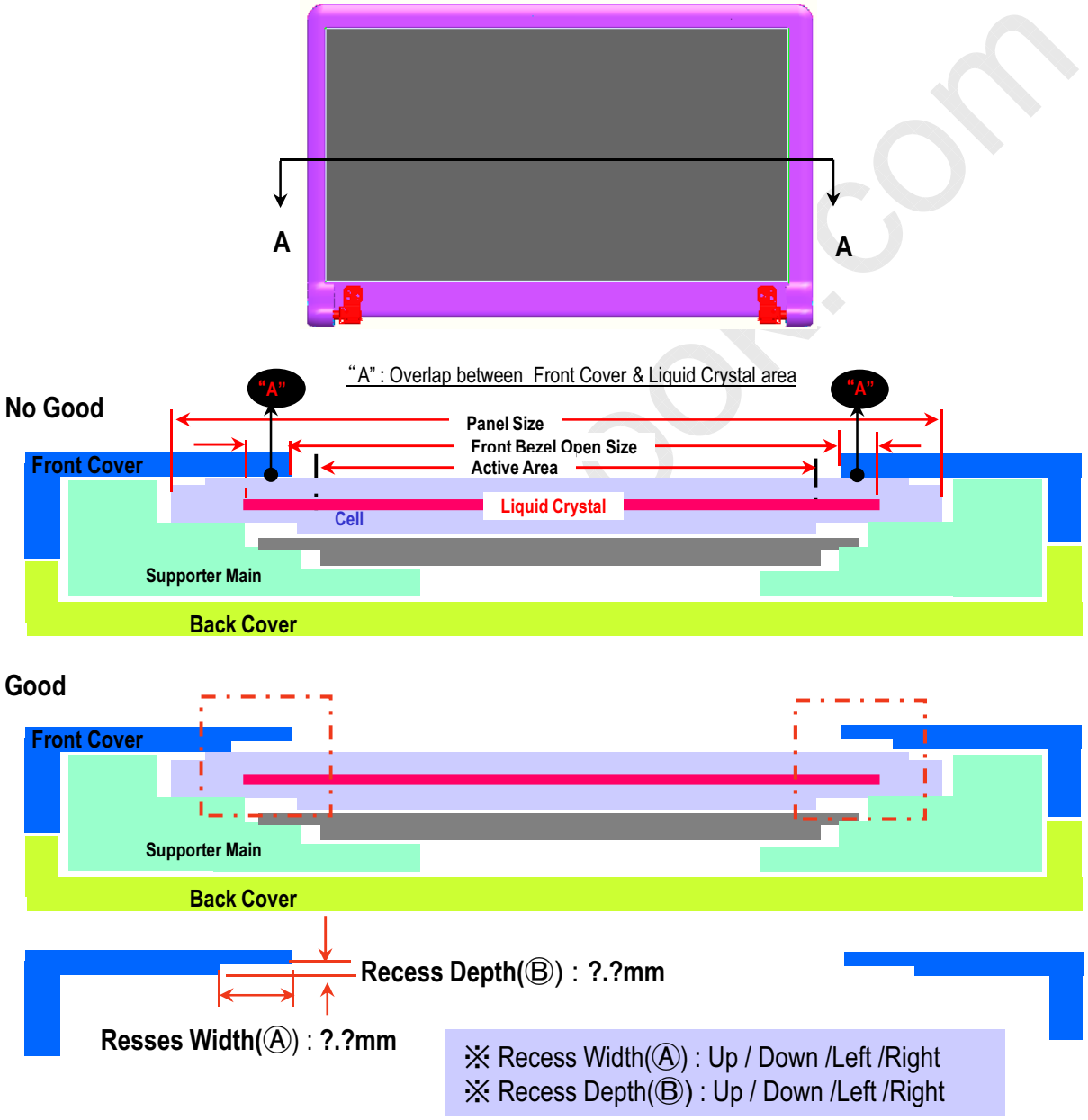

Define	1.Liquid Crystal area is sensitive against external stress, so additional gap by making recess area at the edge of front cover will be helpful on removing a Ripple.(Dimension of Recess depends on each model)

One step solution for LCD / PDP / OLED panel application: Datasheet, inventory and accessory! www.panelook.com

Global LCD Panel Exchange Center www.panelook.com 屏库:全球液晶屏交易中心

6. Reliability

Environment test condition

No.	Test Item	Conditions
1	High temperature storage test	Ta= 60°C, 240h
2	Low temperature storage test	Ta= -20°C, 240h
3	High temperature operation test	Ta= 50°C, 50%RH, 240h
4	Low temperature operation test	Ta= 0°C, 240h
5	Vibration test (non-operating)	Sine wave, 5 ~ 150Hz, 1.5G, 0.37oct/min 3 axis, 30min/axis
6	Shock test (non-operating)	Half sine wave, 180G, 2ms one shock of each six faces(I.e. run 180G 2ms for all six faces)
7	Altitude operating storage / shipment	0 ~ 10,000 feet (3,048m) 24Hr 0 ~ 40,000 feet (12,192m) 24Hr
8	Image Sticking [1)]	Ta= 25°C, Pattern : Mosaic(8 by 6), Operating Time : 30 min Lamp Operating Current : 6.0mA

One step solution for LCD / PDP / OLED panel application: Datasheet, inventory and accessory! www.panelook.com

Global LCD Panel Exchange Center www.panelook.com 屏库:全球液晶屏交易中心

7. International Standards

7-1. Safety

a) UL 60950-1, Second Edition, Underwriters Laboratories Inc.
Information Technology Equipment - Safety - Part 1 : General Requirements.

b) CAN/CSA C22.2 No.60950-1-07, Second Edition, Canadian Standards Association.
Information Technology Equipment - Safety - Part 1 : General Requirements.

c) EN 60950-1:2006 + A11:2009, European Committee for Electrotechnical Standardization(CENELEC).
Information Technology Equipment - Safety - Part 1 : General Requirements.

d) IEC 60950-1:2005, Second Edition, The International Electrotechnical Commission (IEC).
Information Technology Equipment - Safety - Part 1 : General Requirements.

7-2. EMC

a) ANSI C63.4 – 2003 "American National Standard for Methods of Measurement of Radio-Noise Emissions from Low-Voltage Electrical and Electronic Equipment in the Range of 9 kHz to 40 GHz." American National Standards Institute (ANSI), 2003.

b) C.I.S.P.R. Pub. 22. Limits and methods of measurement of radio interference characteristics of information technology equipment." International Special Committee on Radio Interference (C.I.S.P.R.), 2005.

c) EN 55022 "Limits and methods of measurement of radio interference characteristics of information technology equipment." European Committee for Electrotechnical Standardization (CENELEC), 2006.

7-3. Environment

a) RoHS, Directive 2002/95/EC of the European Parliament and of the council of 27 January 2003

One step solution for LCD / PDP / OLED panel application: Datasheet, inventory and accessory! www.panelook.com

Global LCD Panel Exchange Center www.panelook.com 屏库:全球液晶屏交易中心

8. Packing

8-1. Designation of Lot Mark

a) Lot Mark

A	B	C	D	E	F	G	H	I	J	K	L	M

A,B,C : SIZE(INCH)
E : MONTH
D : YEAR
F ~ M : SERIAL NO.

Note

1. YEAR

Year	2001	2002	2003	2004	2005	2006	2007	2008	2009	2010
Mark	1	2	3	4	5	6	7	8	9	0

2. MONTH

Month	Jan	Feb	Mar	Apr	May	Jun	Jul	Aug	Sep	Oct	Nov	Dec
Mark	1	2	3	4	5	6	7	8	9	A	B	C

b) Location of Lot Mark

Serial No. is printed on the label. The label is attached to the backside of the LCD module.
This is subject to change without prior notice.

8-2. Packing Form

a) Package quantity in one box : 22 pcs

b) Box Size : 482mm × 380mm × 325mm

One step solution for LCD / PDP / OLED panel application: Datasheet, inventory and accessory! www.panelook.com

Global LCD Panel Exchange Center www.panelook.com 屏库:全球液晶屏交易中心

9. PRECAUTIONS

Please pay attention to the followings when you use this TFT LCD module.

9-1. MOUNTING PRECAUTIONS

(1) You must mount a module using holes arranged in four corners or four sides.
(2) You should consider the mounting structure so that uneven force (ex. Twisted stress) is not applied to the module. And the case on which a module is mounted should have sufficient strength so that external force is not transmitted directly to the module.
(3) Please attach the surface transparent protective plate to the surface in order to protect the polarizer. Transparent protective plate should have sufficient strength in order to the resist external force.
(4) You should adopt radiation structure to satisfy the temperature specification.
(5) Acetic acid type and chlorine type materials for the cover case are not desirable because the former generates corrosive gas of attacking the polarizer at high temperature and the latter causes circuit break by electro-chemical reaction.
(6) Do not touch, push or rub the exposed polarizers with glass, tweezers or anything harder than HB pencil lead. And please do not rub with dust clothes with chemical treatment.
Do not touch the surface of polarizer for bare hand or greasy cloth.(Some cosmetics are detrimental to the polarizer.)
(7) When the surface becomes dusty, please wipe gently with absorbent cotton or other soft materials like chamois soaks with petroleum benzene. Normal-hexane is recommended for cleaning the adhesives used to attach front / rear polarizers. Do not use acetone, toluene and alcohol because they cause chemical damage to the polarizer.
(8) Wipe off saliva or water drops as soon as possible. Their long time contact with polarizer causes deformations and color fading.
(9) Do not open the case because inside circuits do not have sufficient strength.

9-2. OPERATING PRECAUTIONS

(1) The spike noise causes the mis-operation of circuits. It should be lower than following voltage :
V=± 200mV(Over and under shoot voltage)

(2) Response time depends on the temperature.(In lower temperature, it becomes longer.)
(3) Brightness depends on the temperature. (In lower temperature, it becomes lower.)
And in lower temperature, response time(required time that brightness is stable after turned on) becomes longer.
(4) Be careful for condensation at sudden temperature change. Condensation makes damage to polarizer or electrical contacted parts. And after fading condensation, smear or spot will occur.
(5) When fixed patterns are displayed for a long time, remnant image is likely to occur.
(6) Module has high frequency circuits. Sufficient suppression to the electromagnetic interference shall be done by system manufacturers. Grounding and shielding methods may be important to minimized the interference.

One step solution for LCD / PDP / OLED panel application: Datasheet, inventory and accessory! www.panelook.com

Global LCD Panel Exchange Center www.panelook.com 屏库:全球液晶屏交易中心

9-3. ELECTROSTATIC DISCHARGE CONTROL

Since a module is composed of electronic circuits, it is not strong to electrostatic discharge. Make certain that treatment persons are connected to ground through wrist band etc. And don't touch interface pin directly.

9-4. PRECAUTIONS FOR STRONG LIGHT EXPOSURE

Strong light exposure causes degradation of polarizer and color filter.

9-5. STORAGE

When storing modules as spares for a long time, the following precautions are necessary.

(1) Store them in a dark place. Do not expose the module to sunlight or fluorescent light. Keep the temperature between 5°C and 35°C at normal humidity.
(2) The polarizer surface should not come in contact with any other object.
It is recommended that they be stored in the container in which they were shipped.

9-6. HANDLING PRECAUTIONS FOR PROTECTION FILM

(1) When the protection film is peeled off, static electricity is generated between the film and polarizer. This should be peeled off slowly and carefully by people who are electrically grounded and with well ion-blown equipment or in such a condition, etc.
(2) The protection film is attached to the polarizer with a small amount of glue. If some stress is applied to rub the protection film against the polarizer during the time you peel off the film, the glue is apt to remain on the polarizer.
Please carefully peel off the protection film without rubbing it against the polarizer.
(3) When the module with protection film attached is stored for a long time, sometimes there remains a very small amount of glue still on the polarizer after the protection film is peeled off.
(4) You can remove the glue easily. When the glue remains on the polarizer surface or its vestige is recognized, please wipe them off with absorbent cotton waste or other soft material like chamois soaked with normal-hexane.

One step solution for LCD / PDP / OLED panel application: Datasheet, inventory and accessory! www.panelook.com

Global LCD Panel Exchange Center www.panelook.com 屏库:全球液晶屏交易中心

APPENDIX A. Enhanced Extended Display Identification Data (EEDID™) 1/3

	Byte (Dec)	Byte (Hex)	Field Name and Comments	Value (Hex)	Value (Bin)
Header	0	00	Header	00	00000000
	1	01	Header	FF	11111111
	2	02	Header	FF	11111111
	3	03	Header	FF	11111111
	4	04	Header	FF	11111111
	5	05	Header	FF	11111111
	6	06	Header	FF	11111111
	7	07	Header	00	00000000
EDID Vendor / Product Version	8	08	EISA manufacture code (3 Character ID) LGD	30	00110000
	9	09	EISA manufacture code (Compressed ASCⅡ)	E4	11100100
	10	0A	Panel Supplier Reserved - Product Code 022Bh	2B	00101011
	11	0B	(Hex. LSB first)	02	00000010
	12	0C	LCD Module Serial No - Preferred but Optional ("0" If not used)	00	00000000
	13	0D	LCD Module Serial No - Preferred but Optional ("0" If not used)	00	00000000
	14	0E	LCD Module Serial No - Preferred but Optional ("0" If not used)	00	00000000
	15	0F	LCD Module Serial No - Preferred but Optional ("0" If not used)	00	00000000
	16	10	Week of Manufacture 0 weeks	00	00000000
	17	11	Year of Manufacture 2009years	13	00010011
	18	12	EDID structure version # = 1	01	00000001
	19	13	EDID revision # = 3	03	00000011
Display Parameters	20	14	Video input Definition = Digital signal	80	10000000
	21	15	Max H image size (Rounded cm) = 37 cm	25	00100101
	22	16	Max V image size (Rounded cm) = 23 cm	17	00010111
	23	17	Display gamma = (gamma*100)-100 = Example:(2.2*100)-100=120 = 2.2 Gamma	78	01111000
	24	18	Feature Support (no_DPMS, no_Active Off/Very Low Power, RGB color display, Timing BLK 1,no_ GTF)	0A	00001010
Panel Color Coordinates	25	19	Red/Green Low Bits (RxRy/GxGy)	60	01100000
	26	1A	Blue/White Low Bits (BxBy/WxWy)	05	00000101
	27	1B	Red X Rx = 0.595	98	10011000
	28	1C	Red Y Ry =0.35	59	01011001
	29	1D	Green X Gx = 0.34	57	01010111
	30	1E	Green Y Gy =0.578	94	10010100
	31	1F	Blue X Bx = 0.156	28	00101000
	32	20	Blue Y By = 0.105	1B	00011011
	33	21	White X Wx =0.313	50	01010000
	34	22	White Y Wy =0.329	54	01010100
Established Timing	35	23	Established timing 1 (00h if not used)	00	00000000
	36	24	Established timing 2 (00h if not used)	00	00000000
	37	25	Manufacturer's timings (00h if not used)	00	00000000
Standard Timing ID	38	26	Standard timing ID1 (01h if not used)	01	00000001
	39	27	Standard timing ID1 (01h if not used)	01	00000001
	40	28	Standard timing ID2 (01h if not used)	01	00000001
	41	29	Standard timing ID2 (01h if not used)	01	00000001
	42	2A	Standard timing ID3 (01h if not used)	01	00000001
	43	2B	Standard timing ID3 (01h if not used)	01	00000001
	44	2C	Standard timing ID4 (01h if not used)	01	00000001
	45	2D	Standard timing ID4 (01h if not used)	01	00000001
	46	2E	Standard timing ID5 (01h if not used)	01	00000001
	47	2F	Standard timing ID5 (01h if not used)	01	00000001
	48	30	Standard timing ID6 (01h if not used)	01	00000001
	49	31	Standard timing ID6 (01h if not used)	01	00000001
	50	32	Standard timing ID7 (01h if not used)	01	00000001
	51	33	Standard timing ID7 (01h if not used)	01	00000001
	52	34	Standard timing ID8 (01h if not used)	01	00000001
	53	35	Standard timing ID8 (01h if not used)	01	00000001

One step solution for LCD / PDP / OLED panel application: Datasheet, inventory and accessory! www.panelook.com

Global LCD Panel Exchange Center www.panelook.com 屏库:全球液晶屏交易中心

APPENDIX A. Enhanced Extended Display Identification Data (EEDID™) 2/3

	Byte (Dec)	Byte (Hex)	Field Name and Comments	Value (Hex)	Value (Bin)
Timing Descriptor #1	54	36	Pixel Clock/10,000 (LSB) 152 MHz @ 60.04Hz	60	01100000
	55	37	Pixel Clock/10,000 (MSB)	3B	00111011
	56	38	Horizontal Active (lower 8 bits) 1920 Pixels	80	10000000
	57	39	Horizontal Blanking(Thp-HA) (lower 8 bits) 130 Pixels	82	10000010
	58	3A	Horizontal Active / Horizontal Blanking(Thp-HA) (upper 4:4bits)	70	01110000
	59	3B	Vertical Avtive 1200 Lines	B0	10110000
	60	3C	Vertical Blanking (Tvp-HA) (DE Blanking typ.for DE only panels) 35 Lines	23	00100011
	61	3D	Vertical Active : Vertical Blanking (Tvp-HA) (upper 4:4bits)	40	01000000
	62	3E	Horizontal Sync. Offset (Thfp) 48 Pixels	30	00110000
	63	3F	Horizontal Sync Pulse Width (HSPW) 32 Pixels	20	00100000
	64	40	Vertical Sync Offset(Tvfp) : Sync Width (VSPW) 3 Lines : 6 Lines	36	00110110
	65	41	Horizontal Vertical Sync Offset/Width (upper 2bits)	00	00000000
	66	42	Horizontal Image Size (mm) 367 mm	6F	01101111
	67	43	Vertical Image Size (mm) 230 mm	E6	11100110
	68	44	Horizontal Image Size / Vertical Image Size	10	00010000
	69	45	Horizontal Border = 0 (Zero for Notebook LCD)	00	00000000
	70	46	Vertical Border = 0 (Zero for Notebook LCD)	00	00000000
	71	47	Non-Interlace, Normal display, no stereo, Digital Separate (Vsync_NEG, Hsync_NEG), DE only note : LSB is set to '1' if panel is DE-timing only. H/V can be ignored	19	00011001
Timing Descriptor #2	72	48	Flag	00	00000000
	73	49	Flag	00	00000000
	74	4A	Flag	00	00000000
	75	4B	Data Type Tag (Descriptor Defined by manufacturer)	00	00000000
	76	4C	Flag	00	00000000
	77	4D	Descriptor Defined by manufacturer	00	00000000
	78	4E	Descriptor Defined by manufacturer	00	00000000
	79	4F	Descriptor Defined by manufacturer	00	00000000
	80	50	Descriptor Defined by manufacturer	00	00000000
	81	51	Descriptor Defined by manufacturer	00	00000000
	82	52	Descriptor Defined by manufacturer	00	00000000
	83	53	Descriptor Defined by manufacturer	00	00000000
	84	54	Descriptor Defined by manufacturer	00	00000000
	85	55	Descriptor Defined by manufacturer	00	00000000
	86	56	Descriptor Defined by manufacturer	00	00000000
	87	57	Descriptor Defined by manufacturer	00	00000000
	88	58	Descriptor Defined by manufacturer	00	00000000
	89	59	Descriptor Defined by manufacturer	00	00000000
Timing Descriptor #3	90	5A	Flag	00	00000000
	91	5B	Flag	00	00000000
	92	5C	Flag	00	00000000
	93	5D	Data Type Tag (ASCII String)	FE	11111110
	94	5E	Flag	00	00000000
	95	5F	ASCII String L	4C	01001100
	96	60	ASCII String G	47	01000111
	97	61	ASCII String	20	00100000
	98	62	ASCII String D	44	01000100
	99	63	ASCII String i	69	01101001
	100	64	ASCII String s	73	01110011
	101	65	ASCII String p	70	01110000
	102	66	ASCII String l	6C	01101100
	103	67	ASCII String a	61	01100001
	104	68	ASCII String y	79	01111001
	105	69	Manufacturer P/N(If<13 char--> 0Ah, then terminate with ASCⅡ code 0Ah,set remaining char = 20h)	0A	00001010
	106	6A	Manufacturer P/N(If<13 char--> 0Ah, then terminate with ASCⅡ code 0Ah,set remaining char = 20h)	20	00100000
	107	6B	Manufacturer P/N(If<13 char--> 0Ah, then terminate with ASCⅡ code 0Ah,set remaining char = 20h)	20	00100000

One step solution for LCD / PDP / OLED panel application: Datasheet, inventory and accessory! www.panelook.com

Global LCD Panel Exchange Center www.panelook.com 屏库:全球液晶屏交易中心

APPENDIX A. Enhanced Extended Display Identification Data (EEDID™) 3/3

	Byte (Dec)	Byte (Hex)	Field Name and Comments		Value (Hex)	Value (Bin)
Timing Descriptor #4	108	6C	Flag		00	00000000
	109	6D	Flag		00	00000000
	110	6E	Flag		00	00000000
	111	6F	Data Type Tag (Monitor Name, stored as ASCII)		FC	11111100
	112	70	Flag		00	00000000
	113	71	Monitor Name, stored as ASCII	L	4C	01001100
	114	72	Monitor Name, stored as ASCII	P	50	01010000
	115	73	Monitor Name, stored as ASCII	1	31	00110001
	116	74	Monitor Name, stored as ASCII	7	37	00110111
	117	75	Monitor Name, stored as ASCII	1	31	00110001
	118	76	Monitor Name, stored as ASCII	W	57	01010111
	119	77	Monitor Name, stored as ASCII	U	55	01010101
	120	78	Monitor Name, stored as ASCII	7	37	00110111
	121	79	Monitor Name, stored as ASCII	-	2D	00101101
	122	7A	Monitor Name, stored as ASCII	T	54	01010100
	123	7B	Monitor Name, stored as ASCII	L	4C	01001100
	124	7C	Monitor Name, stored as ASCII	B	42	01000010
	125	7D	Monitor Name, stored as ASCII	1	31	00110001
Chec	126	7E	Extension flag (# of optional 128 panel ID extension block to follow, Typ = 0)		00	00000000
	127	7F	Check Sum (The 1-byte sum of all 128 bytes in this panel ID block shall = 0)		EF	11101111

One step solution for LCD / PDP / OLED panel application: Datasheet, inventory and accessory! www.panelook.com