Lonten N-channel 700V, 4A, 0.96Ω LonFET™ Power MOSFET

Description

LonFET™ Power MOSFET is fabricated using advanced super junction technology. The resulting device has extremely low on resistance, making it especially suitable for applications which require superior power density and outstanding efficiency.

Features

- Ultra low $R_{DS(on)}$
- Ultra low gate charge (typ. Q_g = 11nC)
- 100% UIS tested
- RoHS compliant

Applications

- Power faction correction (PFC).
- Switched mode power supplies (SMPS).
- Uninterruptible power supply (UPS).

Product Summary

V_{DS} @ $T_{j,max}$	750V
$R_{DS(on),max}$	0.96Ω
I_{DM}	12A
$Q_{g,typ}$	11nC

TO-251 TO-252 TO-220 TO-220MF

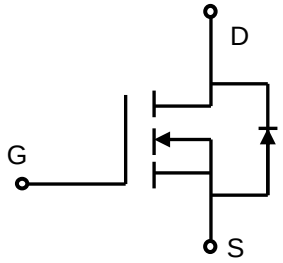

N-Channel MOSFET

Absolute Maximum Ratings

Parameter	Symbol	LSX04N70A	Unit
Drain-Source Voltage	V_{DSS}	700	V
Continuous drain current (T_C = 25°C)	I_D	4	A
(T_C = 100°C)		2.5	A
Pulsed drain current [1]	I_{DM}	12	A
Gate-Source voltage	V_{GSS}	±30	V
Avalanche energy, single pulse [2]	E_{AS}	130	mJ
Avalanche energy, repetitive [3]	E_{AR}	0.4	mJ
Avalanche current, repetitive [3]	I_{AR}	4	A
Power Dissipation (T_C = 25°C)	P_D	50	W
- Derate above 25°C		0.4	W/°C
Operating and Storage Temperature Range	T_J, T_{STG}	-55 to +150	°C
Continuous diode forward current	I_S	4	A
Diode pulse current	$I_{S,pulse}$	12	A

Thermal Characteristics TO-251/TO-252/TO-220

Parameter	Symbol	Value	Unit
Thermal Resistance, Junction-to-Case	$R_{\theta JC}$	2.5	°C/W
Thermal Resistance, Junction-to-Ambient	$R_{\theta JA}$	62	°C/W

Thermal Characteristics TO-220MF

Parameter	Symbol	Value	Unit
Thermal Resistance, Junction-to-Case	$R_{\theta JC}$	4.3	°C/W
Thermal Resistance, Junction-to-Ambient	$R_{\theta JA}$	80	°C/W

Package Marking and Ordering Information

Device	Device Package	Marking
LSC04N70A	TO-220	LSC04N70A
LSD04N70A	TO-220MF	LSD04N70A
LSG04N70A	TO-252	LSG04N70A
LSH04N70A	TO-251	LSH04N70A

Electrical Characteristics

T_c = 25°C unless otherwise noted

Parameter	Symbol	Test Condition	Min.	Typ.	Max.	Unit
Static characteristics						
Drain-source breakdown voltage	BV_{DSS}	V_{GS}=0 V, I_D=0.25 mA	700	-	-	V
Gate threshold voltage	$V_{GS(th)}$	V_{DS}=V_{GS}, I_D=0.25mA	2.5	3.5	4.5	V
Drain cut-off current	I_{DSS}	V_{DS}=700 V, V_{GS}=0 V,				μA
		T_j = 25°C	-	-	1	
		T_j = 125°C	-	10	-	
Gate leakage current, Forward	I_{GSSF}	V_{GS}=30 V, V_{DS}=0 V	-	-	100	nA
Gate leakage current, Reverse	I_{GSSR}	V_{GS}=-30 V, V_{DS}=0 V	-	-	-100	nA
Drain-source on-state resistance	$R_{DS(on)}$	V_{GS}=10 V, I_D=2 A	-			
		T_j = 25°C	-	0.83	0.96	Ω
		T_j = 150°C	-	1.9	-	
Gate resistance	R_G	f=1 MHz, open drain	-	6	-	Ω
Dynamic characteristics						
Input capacitance	C_{iss}	V_{DS} = 100 V, V_{GS} = 0 V,	-	450	-	
Output capacitance	C_{oss}	f = 1 MHz	-	29	-	pF
Reverse transfer capacitance	C_{rss}		-	1.6	-	
Turn-on delay time	$t_{d(on)}$	V_{DD} = 300V, I_D = 2A	-	10	-	
Rise time	t_r	R_G = 12Ω, V_{GS}=10V	-	20	-	ns
Turn-off delay time	$t_{d(off)}$		-	24	-	
Fall time	t_f		-	22	-	
Gate charge characteristics						
Gate to source charge	Q_{gs}	V_{DD}=480 V, I_D=2A,	-	2	-	
Gate to drain charge	Q_{gd}	V_{GS}=0 to 10 V	-	9	-	nC
Gate charge total	Q_g		-	11	-	
Gate plateau voltage	$V_{plateau}$		-	6.1	-	V

Reverse diode characteristics						
Diode forward voltage	V_{SD}	V_{GS}=0 V, I_F=2A	-	-	1.2	V
Reverse recovery time	t_{rr}	V_R=50 V, I_F=4A,	-	200	-	ns
Reverse recovery charge	Q_{rr}	dI_F/dt=100 A/μs	-	1.5	-	μC
Peak reverse recovery current	I_{rrm}		-	13.5	-	A

Notes:

1. Limited by maximum junction temperature, maximum duty cycle is 0.75.
2. I_{AS} = 2A, V_{DD} = 50V, Starting T_j= 25°C.
3. Repetitive Rating: Pulse width limited by maximum junction temperature.

Electrical Characteristics Diagrams

Figure 1. On-Region Characteristics

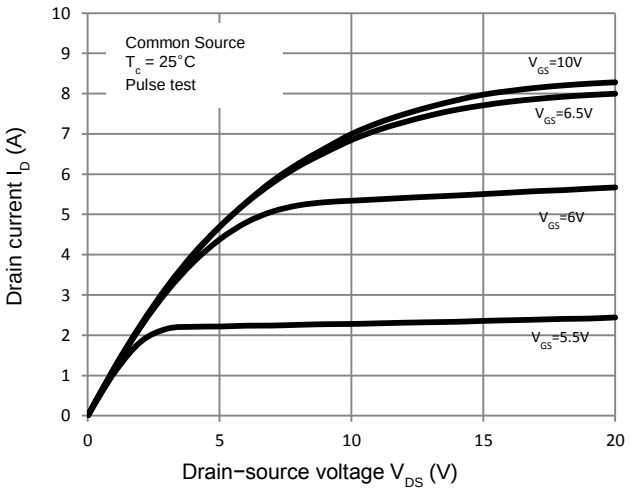

Figure 2. Transfer Characteristics

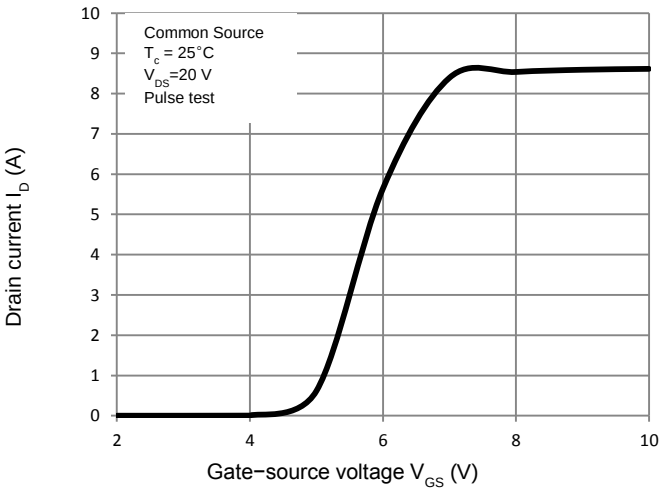

Figure 3. On-Resistance Variation vs. Drain Current

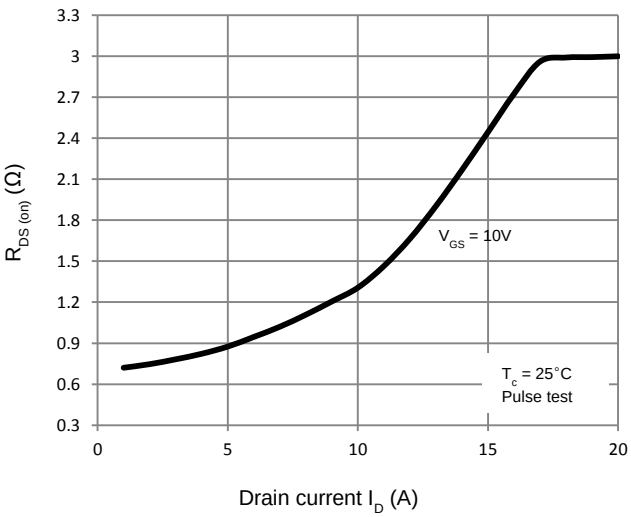

Figure 4. Threshold Voltage vs. Temperature

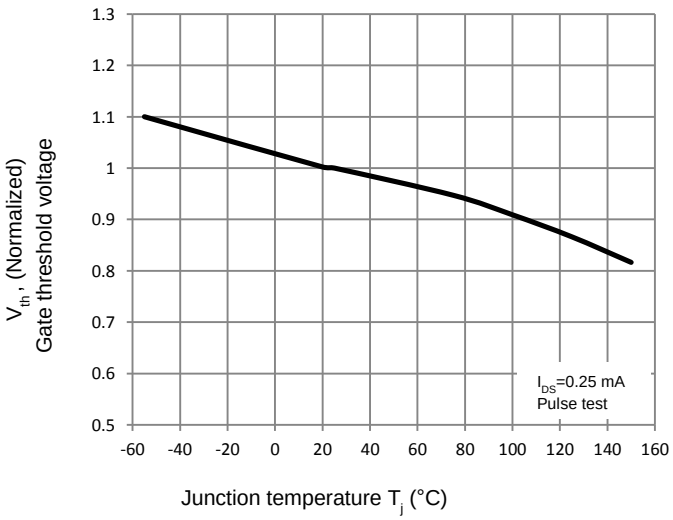

Figure 5. Breakdown Voltage vs. Temperature

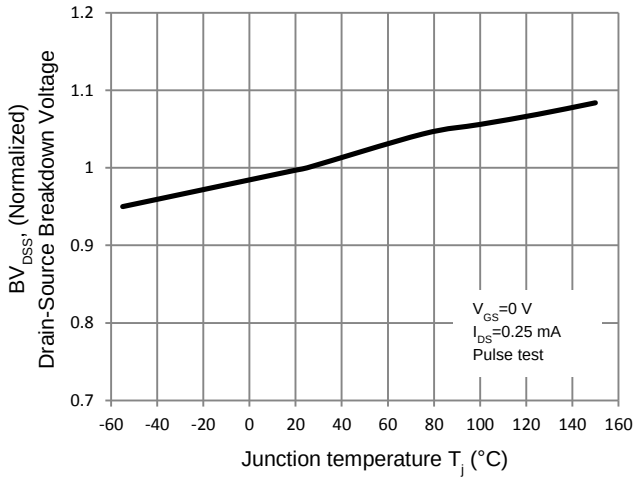

Figure 6. On-Resistance vs. Temperature

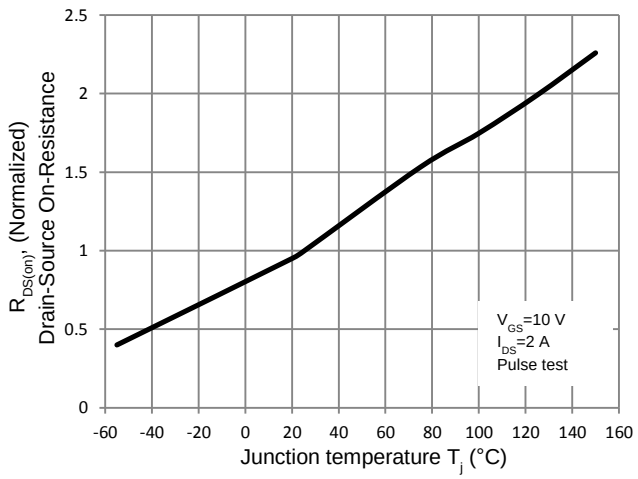

Figure 7. Capacitance Characteristics

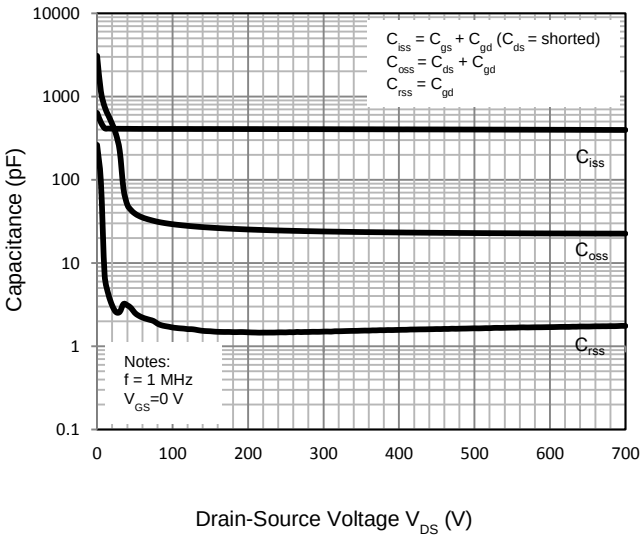

Figure 8. Gate Charge Characteristics

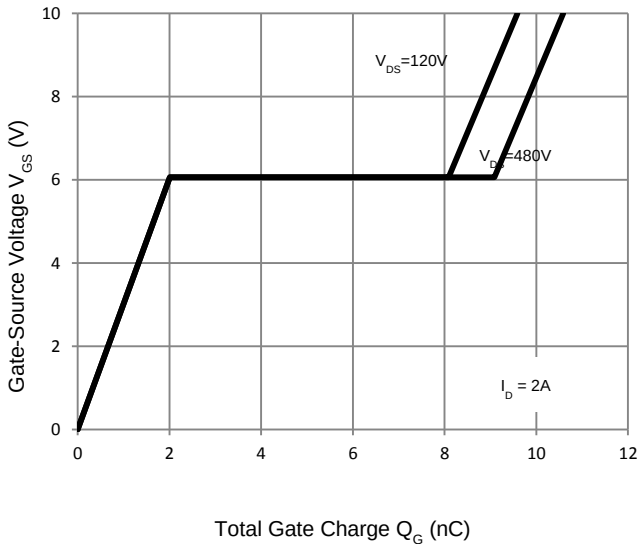

Figure 9. Maximum Safe Operating Area

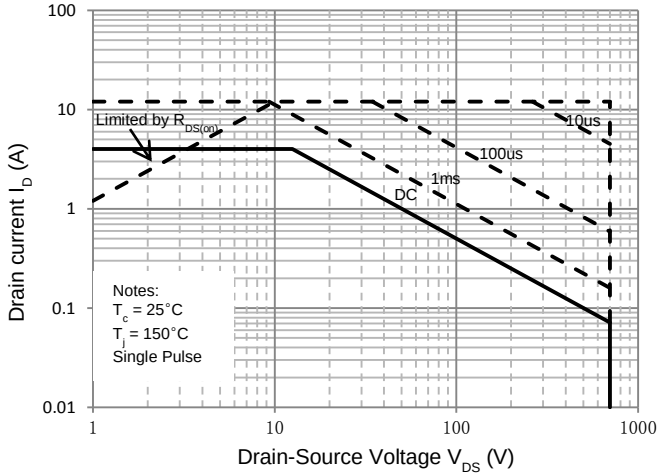

Figure 10. Power Dissipation vs. Temperature

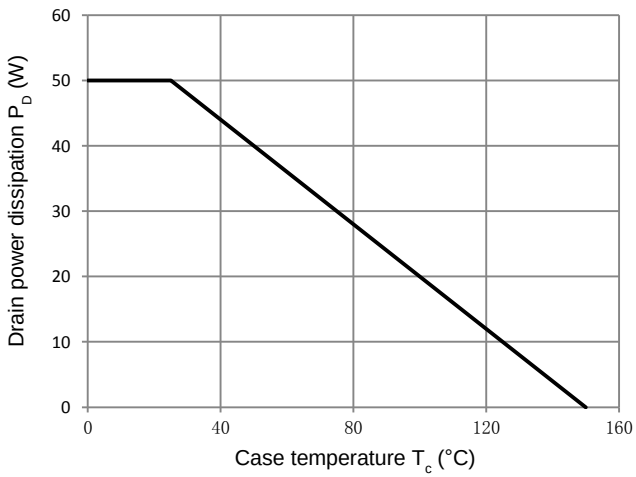

Figure 11. Transient Thermal Response Curve

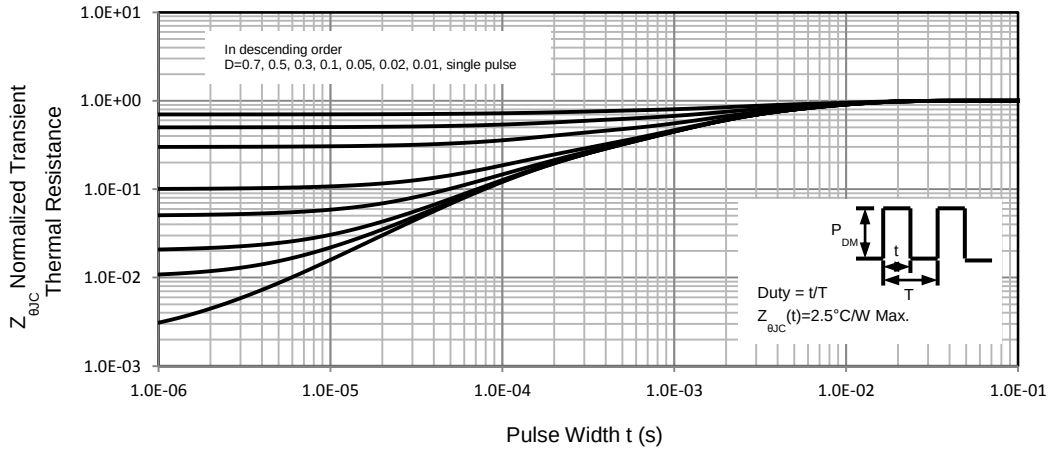

Gate Charge Test Circuit & Waveform

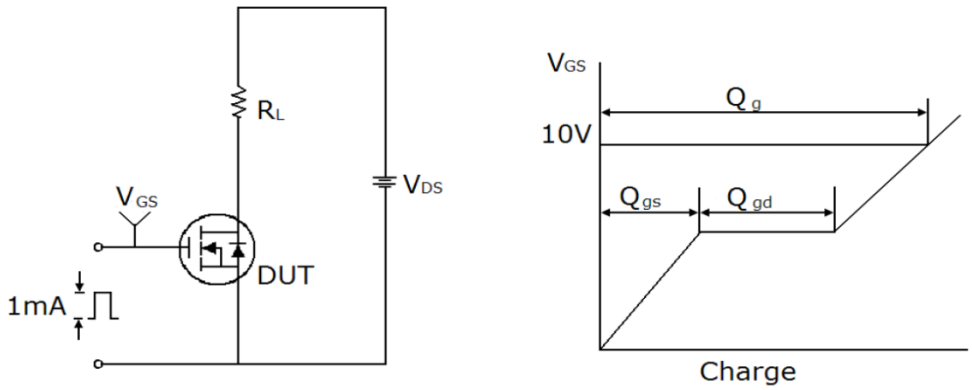

Switching Test Circuit & Waveforms

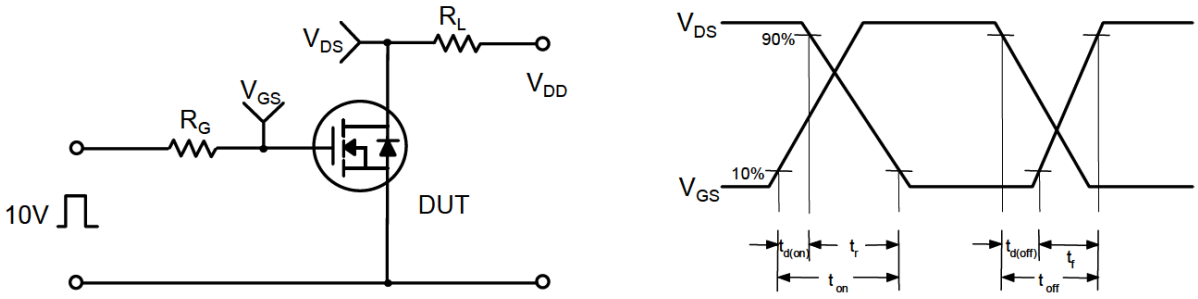

Unclamped Inductive Switching Test Circuit & Waveforms

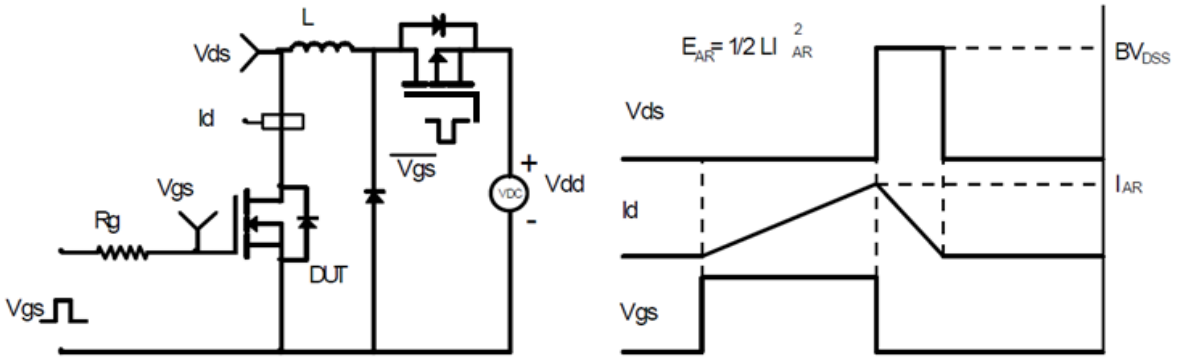

Mechanical Dimensions for TO-251

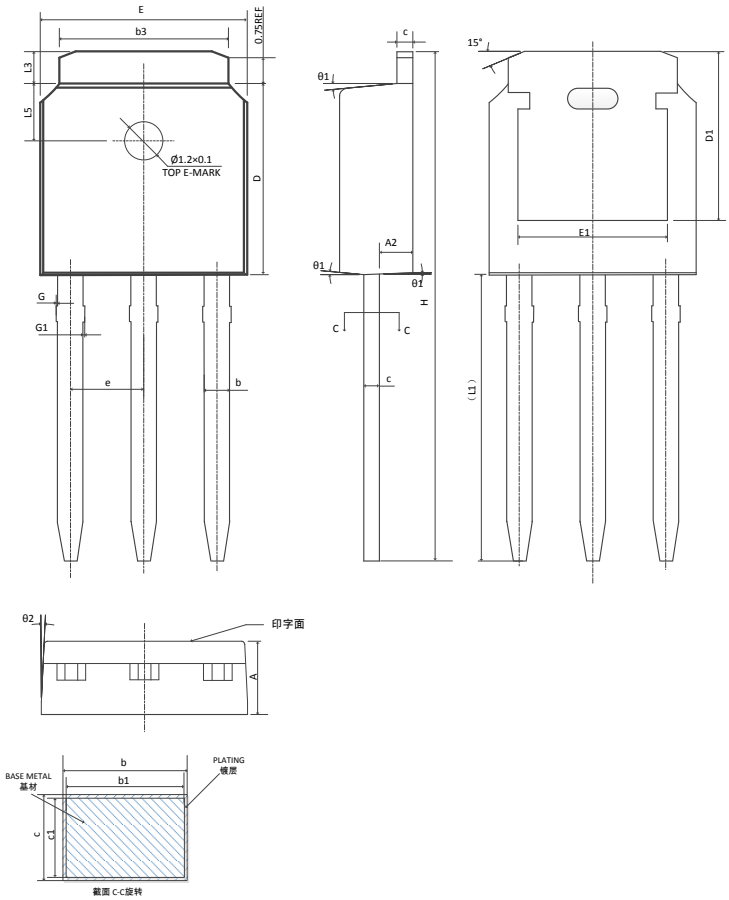

COMMON DIMENSIONS			
SYMBOL	MM		
	MIN	NOM	MAX
A	2.20	2.30	2.38
A2	0.97	1.07	1.17
b	0.72	0.78	0.85
b1	0.71	0.76	0.81
b3	5.23	5.33	5.46
c	0.47	0.53	0.58
c1	0.46	0.51	0.56
D	6.00	6.10	6.20
D1	5.30REF		
E	6.50	6.60	6.70
E1	4.70	4.83	4.92
e	2.286BSC		
H	16.10	16.40	16.60
L1	9.20	9.40	9.60
L3	0.90	1.02	1.25
L5	1.70	1.80	1.90
θ1	5°	7°	9°
θ2	5°	7°	9°

TO-251 Part Marking Information

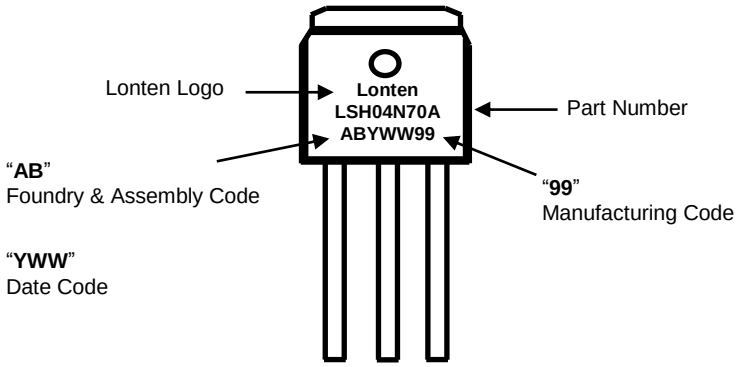

Mechanical Dimensions for TO-252

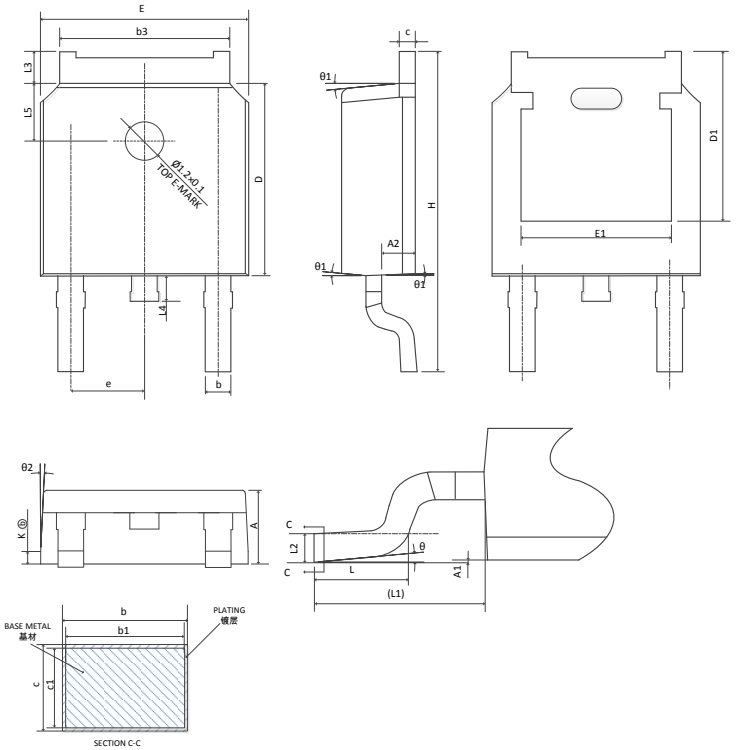

COMMON DIMENSIONS			
SYMBOL	mm		
	MIN	NOM	MAX
A	2.20	2.30	2.38
A1	0.00	—	0.10
A2	0.97	1.07	1.17
b	0.72	0.78	0.85
b1	0.71	0.76	0.81
b3	5.23	5.33	5.46
c	0.47	0.53	0.58
c1	0.46	0.51	0.56
D	6.00	6.10	6.20
D1	5.30REF		
E	6.50	6.60	6.70
E1	4.70	4.83	4.92
e	2.286BSC		
H	9.90	10.10	10.30
L	1.40	1.50	1.70
L1	2.90REF		
L2	0.51BSC		
L3	0.90	—	1.25
L4	0.60	0.80	1.00
L5	1.70	1.80	1.90
θ	0°	—	8°
θ1	5°	7°	9°
θ2	5°	7°	9°
K	0.40REF		

TO-252 Part Marking Information

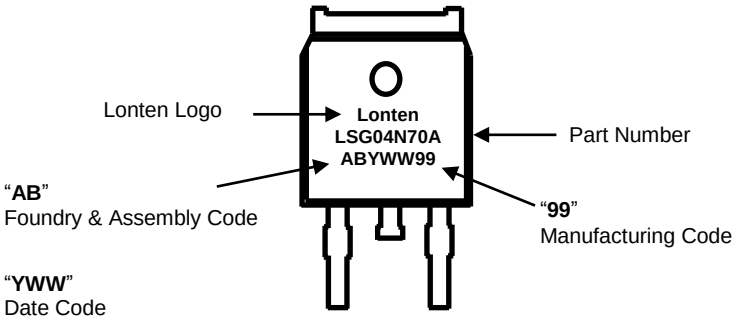

Mechanical Dimensions for TO-220

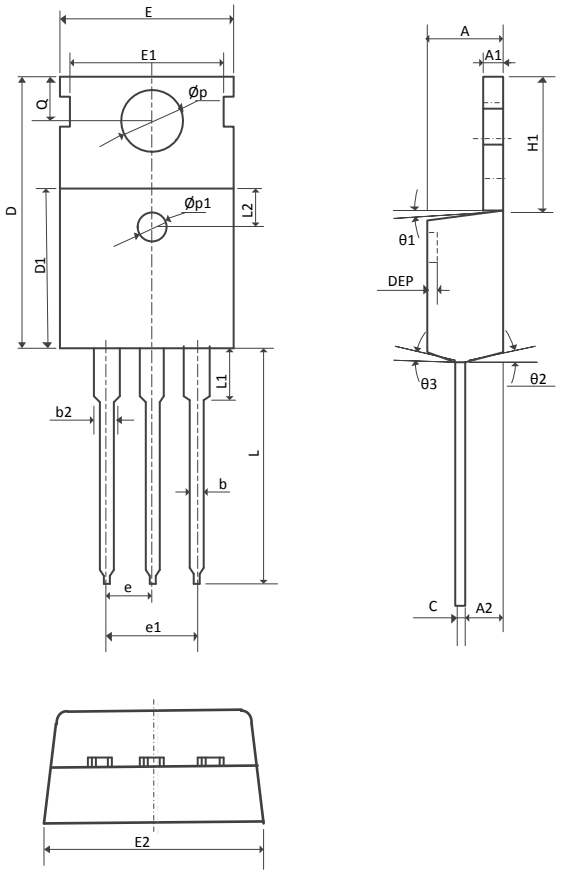

COMMON DIMENSIONS						
SYMBOL	MM			INCH		
	MIN	NOM	MAX	MIN	NOM	MAX
A	4.40	4.57	4.70	0.173	0.180	0.185
A1	1.27	1.30	1.37	0.050	0.051	0.054
A2	2.35	2.40	2.50	0.091	0.094	0.098
b	0.77	0.80	0.90	0.030	0.031	0.035
b2	1.17	1.27	1.36	0.046	0.050	0.054
c	0.48	0.50	0.56	0.019	0.020	0.022
D	15.40	15.60	15.80	0.606	0.614	0.622
D1	9.00	9.10	9.20	0.354	0.358	0.362
DEP	0.05	0.10	0.20	0.002	0.004	0.008
E	9.80	10.00	10.20	0.386	0.394	0.402
E1	–	8.70	–	–	0.343	–
E2	9.80	10.00	10.20	0.386	0.394	0.401
Øp1	1.40	1.50	1.60	0.055	0.059	0.063
e	2.54BSC			0.1BSC		
e1	5.08BSC			0.2BSC		
H1	6.40	6.50	6.60	0.252	0.256	0.260
L	12.75	13.50	13.65	0.502	0.531	0.537
L1	–	3.10	3.30	–	0.122	0.130
L2		2.50REF			0.098REF	
Øp	3.50	3.60	3.63	0.137	0.142	0.143
Q	2.73	2.80	2.87	0.107	0.110	0.116
θ1	5°	7°	9°	5°	7°	9°
θ2	1°	3°	5°	1°	3°	5°
θ3	1°	3°	5°	1°	3°	5°

TO-220 Part Marking Information

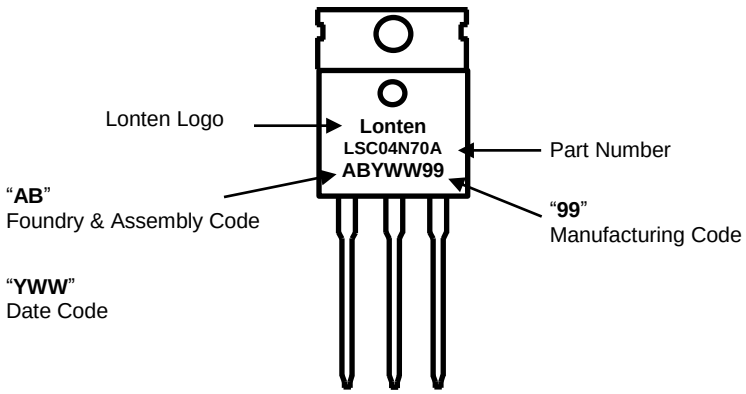

Mechanical Dimensions for TO-220MF

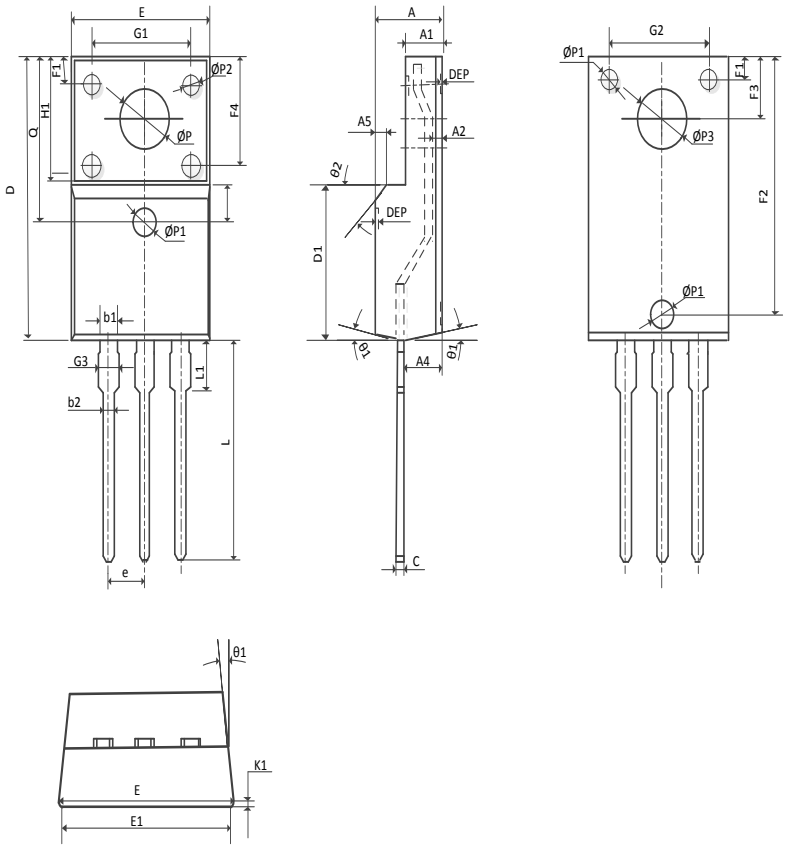

COMMON DIMENSIONS						
SYMBOL	MM			INCH		
	MIN	NOM	MAX	MIN	NOM	MAX
E	10.04	10.20	10.36	0.395	0.402	0.408
A	4.50	4.70	4.90	0.177	0.185	0.193
A1	2.34	2.54	2.74	0.092	0.100	0.108
A2	0.70	0.85	1.00	0.028	0.033	0.039
A4	2.65	2.75	2.85	0.104	0.108	0.112
A5	1.00REF			0.039REF		
C	0.42	0.50	0.58	0.017	0.020	0.023
D	15.67	15.87	16.07	0.617	0.625	0.633
Q	9.20REF			0.362REF		
H1	6.70REF			0.264REF		
e	2.54BSC			0.1BSC		
ØP	3.183REF			0.125REF		
L	12.78	12.98	13.18	0.503	0.511	0.519
L1	3.25	3.45	3.65	0.128	0.136	0.144
D1	9.17REF			0.362REF		
ØP1	1.40	1.50	1.60	0.055	0.059	0.063
ØP2	1.15	1.20	1.25	0.045	0.047	0.049
ØP3	3.45REF			0.136REF		
θ1	5°	7°	9°	5°	7°	9°
θ2	-	45°	-	-	45°	-
DEP	0.05	0.10	0.15	0.002	0.004	0.006
F1	1.90	2.00	2.10	0.075	0.079	0.083
F2	13.80	13.90	14.00	0.543	0.547	0.551
F3	3.20	3.30	3.40	0.126	0.130	0.134
F4	5.30	5.40	5.50	0.209	0.213	0.217
G1	6.60	6.70	6.80	0.260	0.264	0.268
G2	6.90	7.00	7.10	0.272	0.276	0.280
G3	1.10	1.30	1.50	0.043	0.051	0.059
b1	1.05	1.20	1.35	0.041	0.047	0.053
b2	0.70	0.80	0.85	0.028	0.031	0.033
E1	9.90	10.00	10.10	0.390	0.394	0.398
K1	0.65	0.70	0.75	0.026	0.028	0.030

TO-220MF Part Marking Information

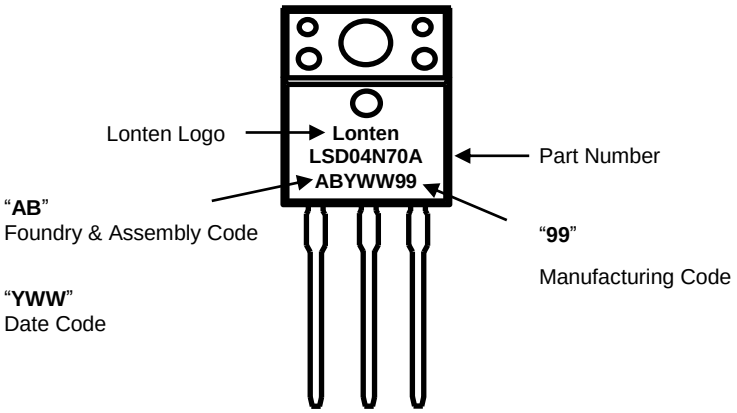

Disclaimer

The content specified herein is for the purpose of introducing LONTEN's products (hereinafter "Products"). The information given in this document shall in no event be regarded as a guarantee of conditions or characteristics. Examples of application circuits, circuit constants and any other information contained herein illustrate the standard usage and operations of the Products. The peripheral conditions must be taken into account when designing circuits for mass production.

LONTEN does not assume any liability for infringement of patents, copyrights, or other intellectual property rights of third parties by or arising from the use of the Products or technical information described in this document.

The Products are not designed or manufactured to be used with any equipment, device or system which requires an extremely high level of reliability the failure or malfunction of which may result in a direct threat to human life or create a risk of human injury (such as a medical instrument, transportation equipment, aerospace machinery, nuclear-reactor controller, fuel-controller or other safety device). LONTEN shall bear no responsibility in any way for use of any of the Products for the above special purposes.

Although LONTEN endeavors to improve the quality and reliability of its products, semiconductor products have specific characteristics such as the occurrence of failure at a certain rate and malfunctions under certain use conditions. Please be sure to implement safety measures to guard them against the possibility of physical injury, and injury or damage caused by fire in the event of the failure of a LONTEN product.

The content specified herein is subject to change for improvement without notice. When using a LONTEN product, be sure to obtain the latest specifications.

Jan. 2016 Revision 1.0