ISO 9001:2000 FM86067
BONA Display Specialist

Character Type

OUTLINE DIMENSION

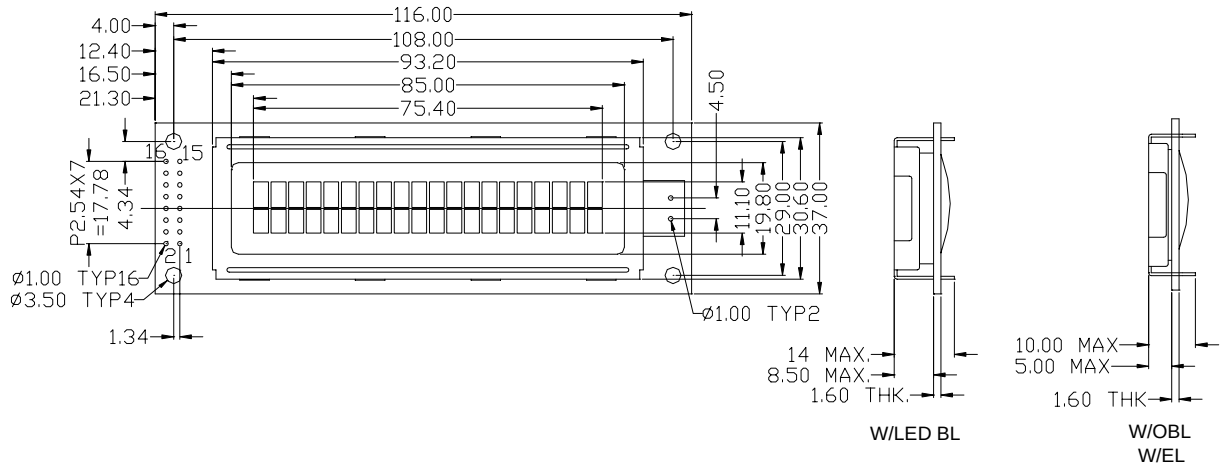

Tolerance: ± 0.20mm, unless otherwise specified.

BLOCK DIAGRAM

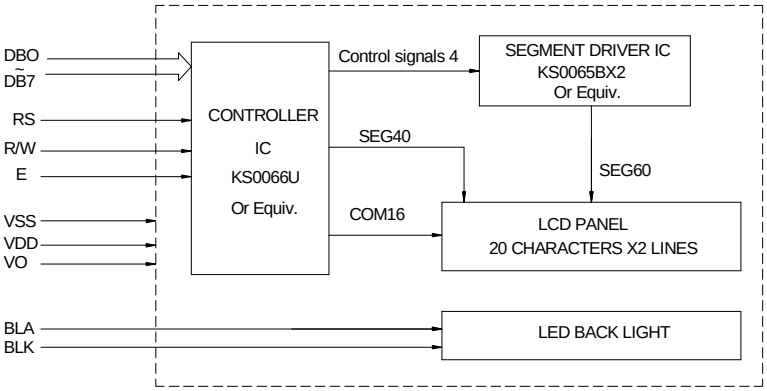

DISPLAY PATTERN

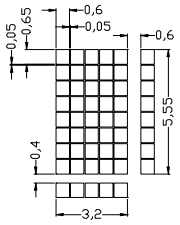

MECHANICAL SPECIFICATION

Item	Dimensions(W)X(H)	Unit
Overall Size	116×37.0	MM
View Area	85.0×19.8	MM
Character	3.20×5.55	MM
Dot Size	0.60×0.65	MM
Dot Pitch	0.65×0.70	MM

PIN ASSIGNMENT

Pin no	Symbol	Function
1	Vss	Power Supply(GND)
2	V_{DD}	Power Supply(+)
3	VO	Contrast Adjust
4	RS	Command data input
5	R/W	Data read / write
6	E	Enable signal
7-14	DB0~DB7	Data bus line
15	BLA	Back light anode
16	BLK	Back light cathode

ABSOLUTE MAXIMUM RATING

Item	Symbol	Condition	Min	Max	Unit
Supply for logic voltage	V_{DD}	25℃	-0.3	7.0	V
LCD driving supply voltage	V_{DD}-VO	25℃	-0.3	V_{DD}+0.3	V
Input voltage	VI	25℃	-0.3	V_{DD}+0.3	V

ELECTRICAL CHARACTERISTICS

Item	Symbol	Condition	Min	Typical	Max	Unit
Supply voltage for logic	V_{DD}	---	4.5	5.0	5.5	V
Supply current for logic	I_{DD}	---	---	0.92	3	mA
Operation voltage for LCD	VDD-Vo	0℃	4.7	5.0	5.3	V
		25℃	4.5	4.8	5.1	V
		50℃	4.3	4.6	4.9	V
Input voltage " H " level	V_{IH}	---	V_{DD}-2.2	---	V_{DD}	V
Input voltage " L " level	V_{IL}	---	0	---	0.8	V
Supply voltage for back light	VF	---	---	4.2	4.6	V
Supply current for back light	IF	VF=4.2V	---	140	280	mA

REMARKS:

1. LCD options: STN, TN, FSTN.
2. Back light Options: LED\EL Back light feature.