OUTLINE DIMENSION

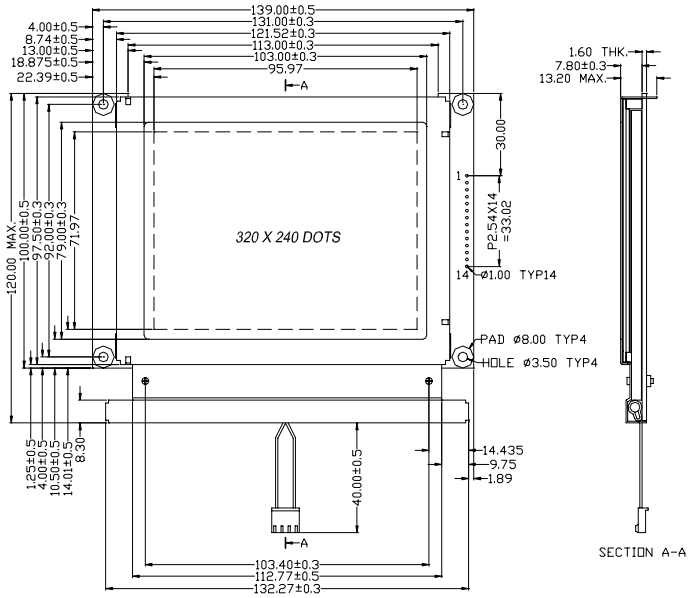

www.DataSheet4U.com

BLOCK DIAGRAM

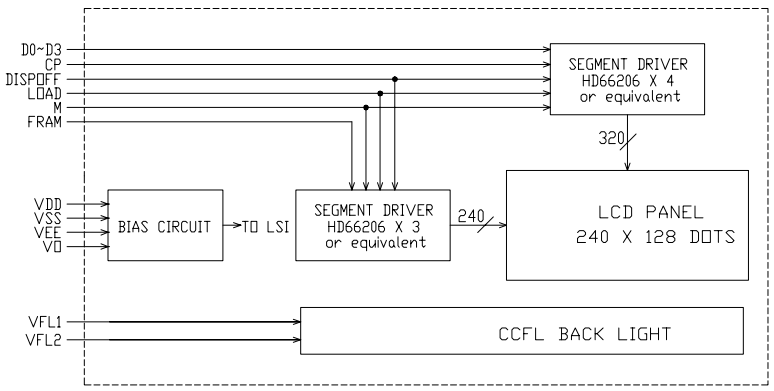

DISPLAY PATTERN

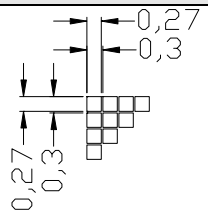

MECHANICAL SPECIFICATION

Item	Dimensions(W)X(H)	Unit
Overall Size	139.0×120.0	MM
View Area	103.0×79.0	MM
Dot Size	0.27×0.27	MM
Dot Pitch	0.30×0.30	MM

Graphic Type

PIN ASSIGNMENT

CN1		
1	Frame	Frame signal
2	LOAD	Data latch signal
3	CP	Clock signal for shifting serial data
4	M	Alternator for LCD drive
5	VO	Variable voltage for LCD
6	VDD	Supply voltage for LCD
7	VSS	Ground
8	VEE	Supply voltage for LCD
9~12	D0~D3	Data bit 0~3
13	DISPOFF	Display on/off
14	NC	No connection
CN2		
1	VFL1	Supply voltage for CCFL
2	NC	No connection
3	NC	No connection
4	VFL2	Supply voltage for CCFL

ABSOLUTE MAXIMUM RATING

Item	Symbol	Condition	Min	Max	Unit
Supply for logic voltage	V_{DD}	25℃	-0.3	7.0	V
LCD driving supply voltage	V_{DD}-V_O	25℃	-0.3	30.0	V
Input voltage	VI	25℃	-0.3	V_{DD}+0.3	V

ELECTRICAL CHARACTERISTICS

Item	Symbol	Condition	Min.	Typical	Max.	Unit
Supply voltage for logic	V_{DD}	---	4.5	5.0	5.5	V
Supply current for logic	V_{LCD}	---	---	10.0	16.0	mA
Operation voltage for LCD	V_{DD}-V_0	0℃	22.7	23.9	25.1	V
		25℃	21.8	23.0	24.2	V
		50℃	20.8	22.0	23.2	V
Input voltage "H" level	V_{IH}	---	0.7VDD	---	V	V
Input voltage "I" level	VIL	---	0	---	0.3V_{DD}	V
Supply voltage for CCFL	VF	---	---	220	---	Vrms
Supply current for CCFL	IF	VF=220 Vrms	---	5m	---	Arms

REMARKS:

1.LCD options:STN, FSTN.

2.Back light Options:EL Back light feature, other Specs not available on catalog is under request.

www.DataSheet4U.com