MN3867S

PAL-Compatible CCD Video Signal Delay Element

■ Overview

The MN3867S is a CCD signal delay element for video signal processing applications.

It contains such components as a threefold-frequency circuit, a shift register clock driver, charge I/O blocks, two CCD analog shift registers switchable between 1700 and 617 stages and between 848.5 and 617 stages, a clamp bias circuit, resampling output amplifiers, and booster circuits.

When the switch input is "L" level, the MN38667S samples the input using the supplied clock signal with a frequency three times the PAL color signal subcarrier frequency (4.43361875 MHz) and, after adding in the attached filter delay, produces independent delays of 1 H (the horizontal scan period) and 2 H for the two lines. When the switch input is "H" level, the MN38667S disables the threefold-frequency circuit and samples the input with the image sensor drive frequency (9.65625 MHz) for the camera's 510 horizontal pixels and, after adding in the attached filter delay, produces independent delays of 1 H (the horizontal scan period) each for the two lines.

■ Features

- Single 5.0 V power supply
- Choice of camera and VCR modes, so that both the camera and VCR portions of a video camera with 510 horizontal pixels can use the same MN38667S for signal processing

■ Applications

- Video cameras

■ Pin Assignment

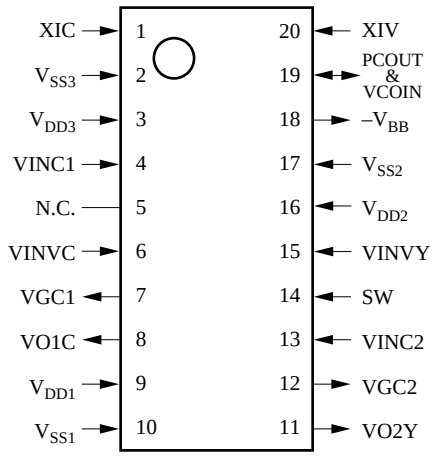

(TOP VIEW)

SOP020-P-0300C

■ Block Diagram

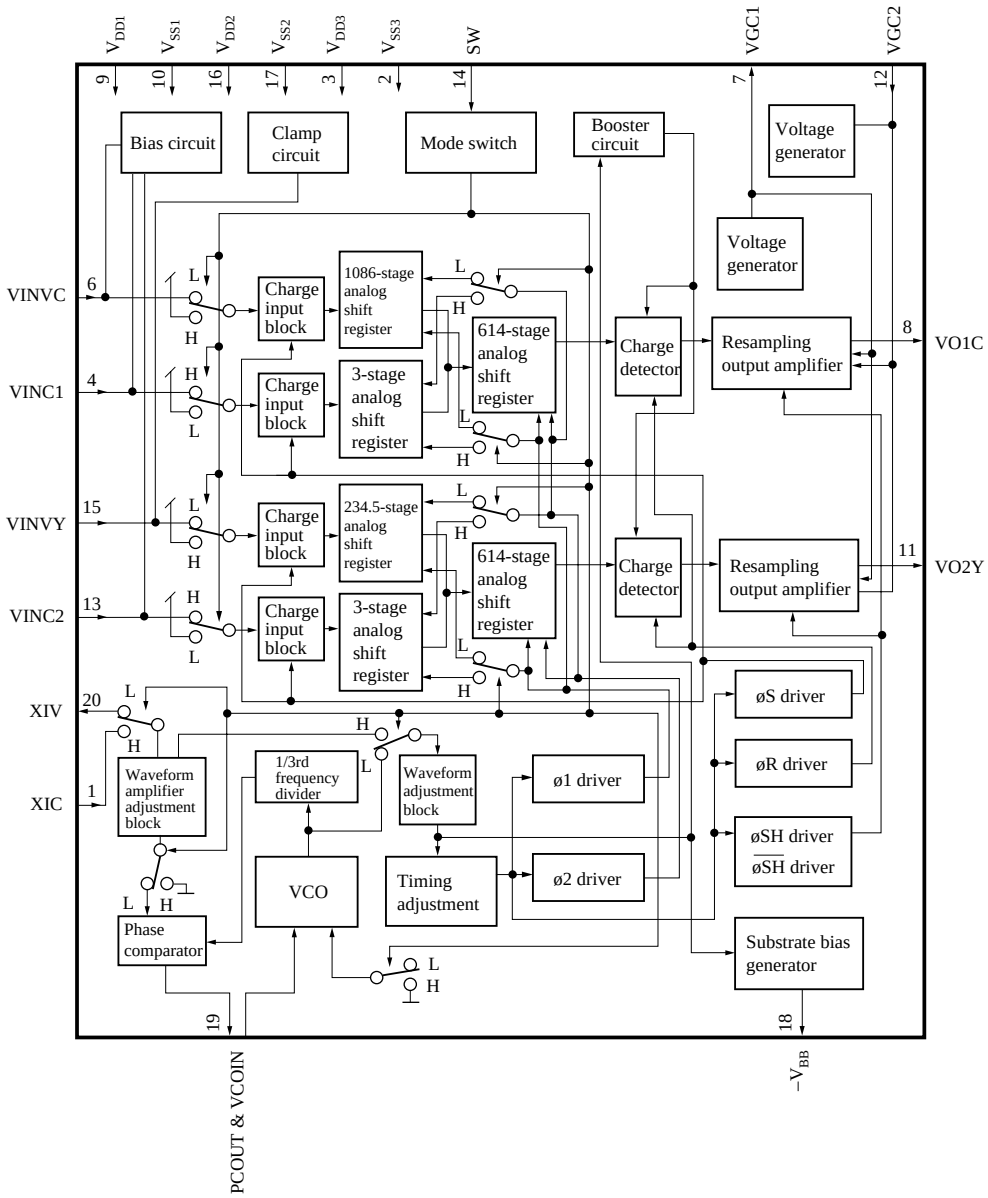

■ Pin Descriptions

Pin No.	Symbol	Pin Name	Remarks
1	XIC	9.65625 MHz clock input	
2	V_{SS3}	GND (3)	Ground for clock multiplier circuit
3	V_{DD3}	Power supply (3)	Power supply for clock multiplier circuit
4	VINC1	Camera signal input (1)	
5	N.C.	No connection	
6	VINVC	Video signal input (C)	
7	VGC1	Output gate connection (1)	
8	VO1C	Signal output (1C)	Output pin for signal fed to pin 4 or pin 6
9	V_{DD1}	Power supply (1)	Power supply for analog circuits
10	V_{SS1}	GND (1)	Ground for analog circuits
11	VO2Y	Signal output (2Y)	Output pin for signal fed to pin 13 or pin 15
12	VGC2	Output gate connection (2)	
13	VINC2	Camera signal input (2)	
14	SW	Camera/video mode switch	
15	VINVY	Video signal input (Y)	
16	V_{DD2}	Power supply (2)	Power supply for digital circuits other than frequency multiplier
17	V_{SS2}	GND (2)	Ground for digital circuits other than frequency multiplier
18	$-V_{BB}$	Substrate connection	Negative voltage pin
19	PCOUT&VCOIN	Phase comparator output and voltage controlled oscillator input	
20	XIV	4.43361875 MHz clock input	

Notes

1: Always connect V_{DD1}, V_{DD2}, and V_{DD3} to the same voltage.

2: Always connect V_{SS1}, V_{SS2}, and V_{SS3} to ground.

■ Application Circuit Example

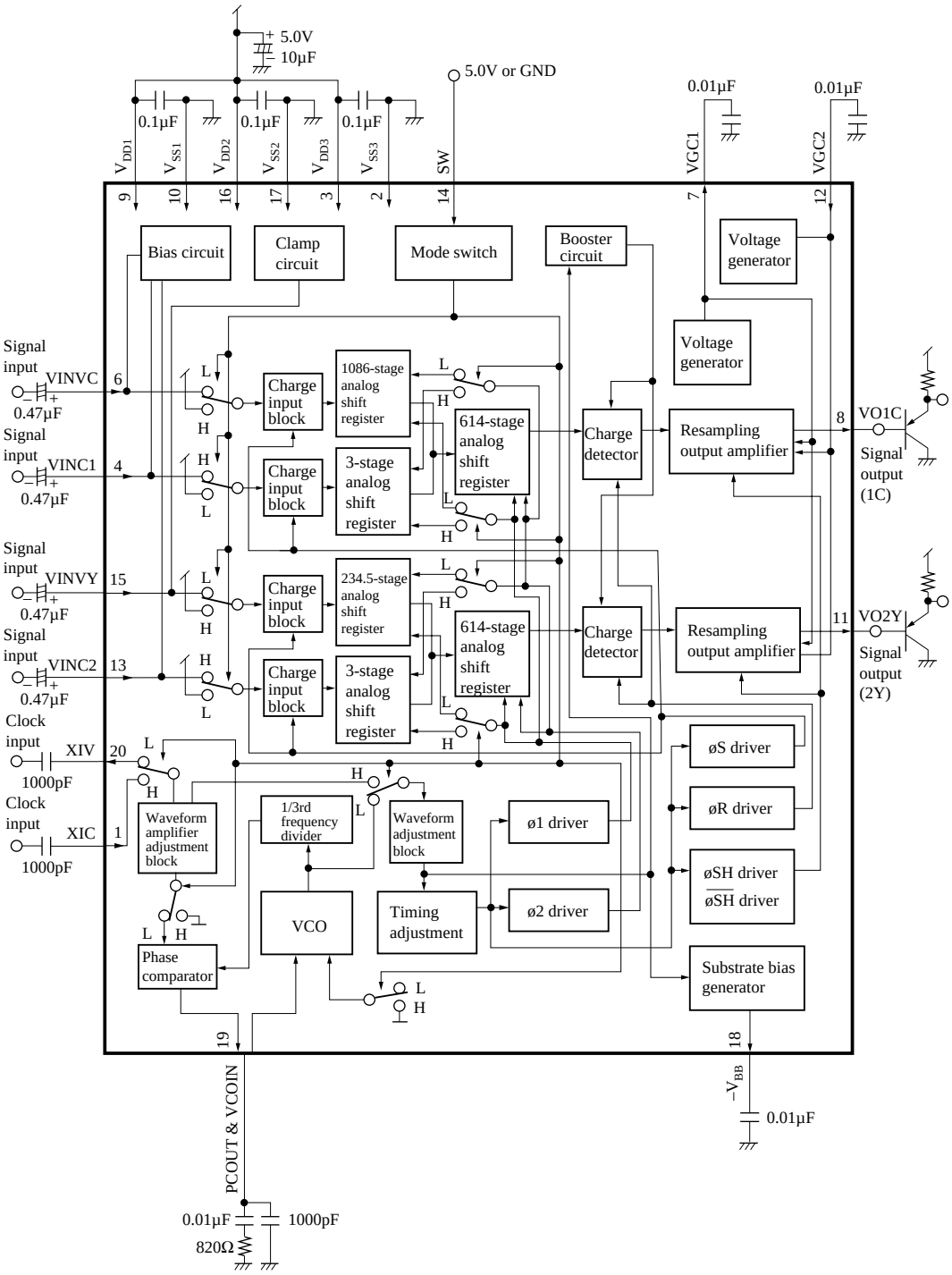

Note: If the capacitor attached to pin 18 has a polarity, attach the negative pole to pin 18.

■ Package Dimensions (Unit:mm)
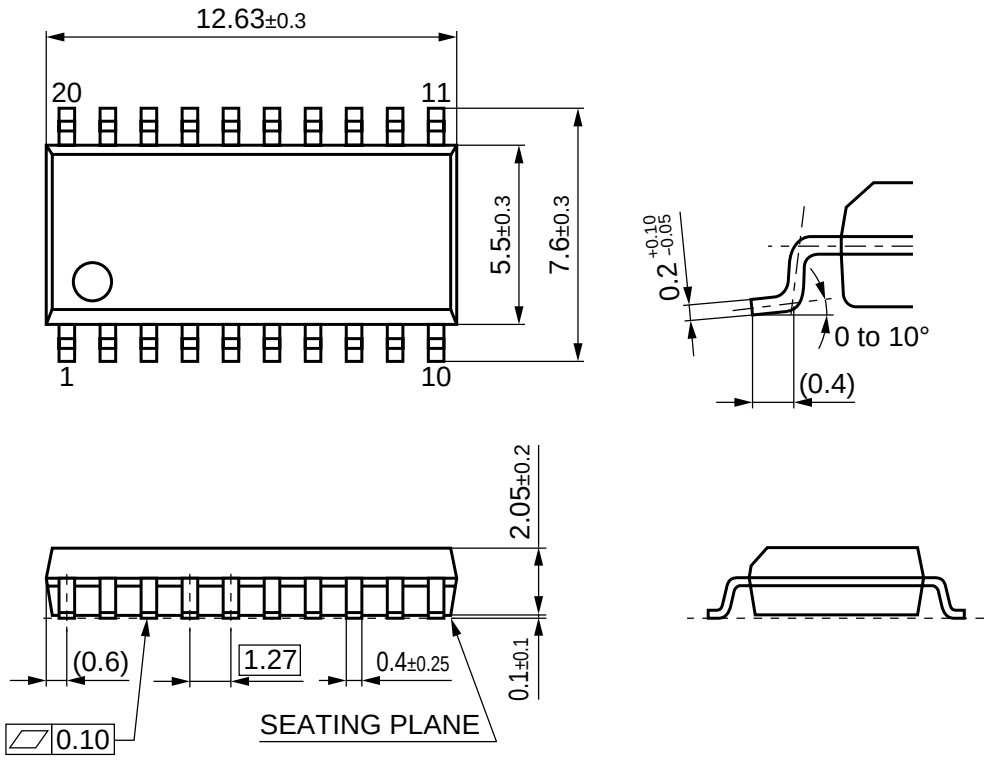
SOP020-P-0300C