Microtips Technology Inc.
台北縣汐止鎮康寧街169巷31號12樓
12F, No 31, Lane 169, Kang Ning St.
Hsi-Chih, Taipei Hsien, Taiwan, R.O.C.
WEB : http://www.microtips.com.tw
E-mail : Macros@microtips.com.tw
TEL: 886-2-2695-3133 FAX :886-2-2695-8625

LCD MODULE SPECIFICATION
FOR CUSTOMER'S APPROVAL

CUSTOMER : Standard

MODULE TYPE : MTG-S12864BFGHSEB

APPROVED BY: (FOR CUSTOMER USE ONLY)

Approved By	Checked By	Prepared By	MT File No	Date Issued

CONTENTS

SPECIFICATION FOR
LIQUID CRYSTAL DISPLAY MODULE
MODEL NO. : MTG-S12864BFGHSEB

View Direction	☑ 6 O'clock			☐12 O'clock	
LCD Type	☐ FSTN Positive			☐ FSTN Negative	
	☑ STN Gray	☐ STN Yellow Green		☐ STN Blue	
Rear Polarizer	☐ Reflective	☑ Transflective		☐ Transmissive	
Backlight Type	☐ LED	☑ EL	☐ Internal Power	☐ 5V input	
		☐ CCFL	☑ External Power	☐ 24V input	
Backlight Color	☐ White	☐ Amber	☑ Blue Green	☐ Yellow Green	☐ Other
Temperature Range	☐ Normal	☑ Wide		☐ Super Wide	
EL Driver IC	☐ Build-in	☑ Not Build-in			
Touch Screen	☐ With	☑ Without			

TO BE VERY CAREFUL !

The LCD driver ICs are made by CMOS process, which are very easy to be damaged by static charge, make sure the user is grounded when handling the LCM.

REV.	DESCRIPTION	DRAWN	CHECK	APP'D	DATE

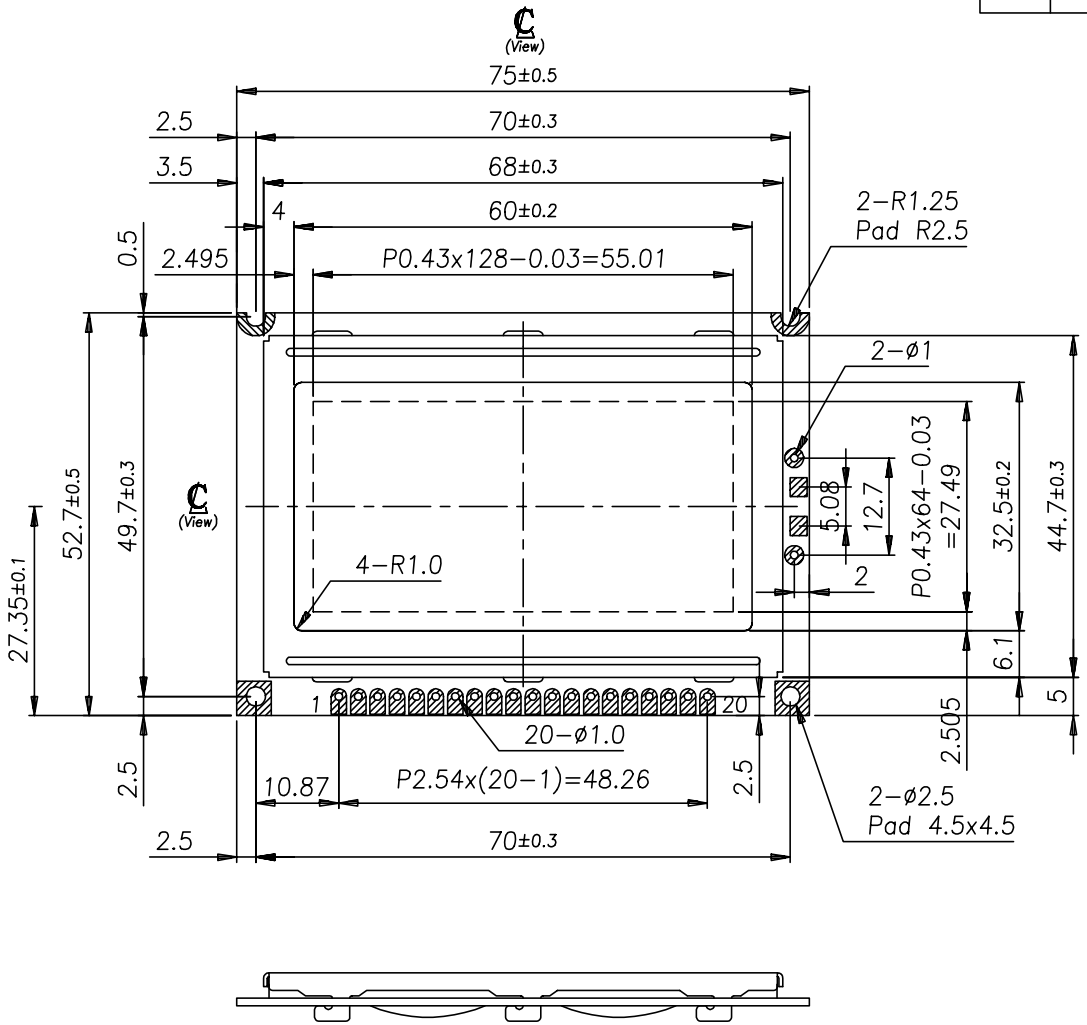

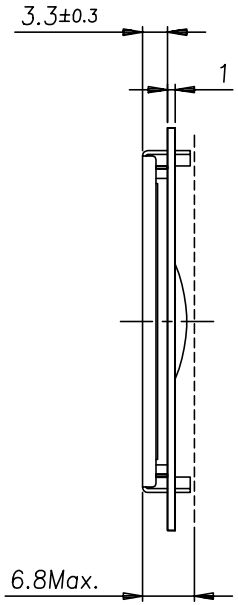

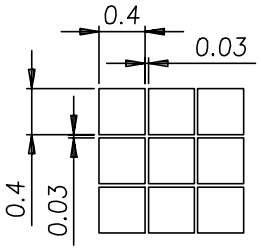

Dots

PIN ASSIGNMENT									
1.	VDD	5.	DB1	9.	DB5	13.	/CS2	17.	E
2.	VSS	6.	DB2	10.	DB6	14.	/RST	18.	FGND
3.	VLC	7.	DB3	11.	DB7	15.	R/W	19.	BKL1
4.	DB0	8.	DB4	12.	/CS1	16.	D/I	20.	BKL2

NO.	PART NAME	Q'TY	DATE:	MATERIAL	FINISH
	M−12864B	−−−	4-29-99'	−−−	−−−

	DRAWN	CHECK	APP'D	UNIT: MM	SCALE: 1/1	PRODUCT: MTG−12864B
Microtips Technology	Henry	Chris	Steele		UNLESS OTHERWISE SPECIFIED TOLERANCE ON FRACTIONS DECIMALS ANGLES 0.10 0.5°	DWG NO.: G12864B0
						FILE: DWG\MTG128\G12864B
						SHEET 1 / 1 Rev: A

GENERAL SPECIFICATION

Item	Content
Display Resolution	128(W)× 64(H)
Dimensional Outline(mm)	75.0(W)× 52.7(H)× 9.0max(D)
Display mode	Transflective/ Positive Type
Circuit	Common-Driver IC, Segment-driver IC with build-in SRAM
Interface	Data (D0～D7), D/I, R/W, E, RST, CS1, CS2, V_{EE}

ABSOLUTE MAXIMUN RATING

(1) Electrical Absolute Ratings

Item	Symbol	Min.	Max.	Unit	Note
Power Supply for Logic	V_{DD}-V_{SS}	-0.3	6.5	Volt	
Power Supply for LCD	V_{DD}-V_{EE}	-0.3	19.0	Volt	
Input Voltage	V_I	-0.3	V_{DD}	Volt	
Current for LED backlight		-	200	mA	
Static Electricity	-	-	-	-	Note 1

Note 1 : Operator should be grounded during handling LCM.

(2) Environmental Absolute Maximum Ratings

Item	Normal Temperature				Wide Temperature			
	Operating		Storage		Operating		Storage	
	Max,	Min.	Max,	Min.	Max,	Min.	Max,	Min.
Ambient Temperature	0℃	+50℃	-20℃	+70℃	-20℃	+70℃	-30℃	+80℃
Humidity(without condensation)	Note 2,4		Note 3,5		Note 4,5		Note 4,6	

Note 2 Ta≦50℃: 80% RH max
Ta>50℃: Absolute humidity must be lower than the humidity of 85%RH at 50℃
Note 3 Ta at -20℃ will be<48hrs at 70℃will be <120hrs when humidity is higher than 75%.
Note 4 Background color changes slightly depending on ambient temperature. This phenomenon is reversible.
Note 5 Ta≦70℃: 75RH max
Ta>70℃: absolute humidity must be lower than the humidity of 75%RH at 70℃
Note 6 Ta at -30℃ will be <48hrs, at 80 ℃ will be <120hrs when humidity is higher than 75%.

ELECTRICAL CHARACTERISTICS

Item	Symbol	Condition	Min.	Typ	Max.	Unit	note
Power Supply for Logic	V_{DD}-V_{SS}	-	4.5	5.0	5.5	Volt	-
Input Voltage	V_{IL}	L level	V_{SS}	0.2 V_{DD}	-	Volt	-
	V_{IH}	H level	0.8 V_{DD}	V_{DD}	-	Volt	-
LCM Recommend LCD Module Driving Voltage	V_{DD} –V_{EE}	T_a＝-20℃	10.1	10.7	11.3	Volt	-
		T_a＝25℃	9.5	10.3	11.0		
		T_a＝70℃	9.6	10.2	10.8		
Power Supply Current for LCM	I_{DD}(LED B/L OFF)	V_{DD} =5.0V T_a=25℃ V_{DD}-V_{EE} =10.3V	-	1.5	1.8	mA	-
	I_{EE}		-	0.6	1.0		
Power Supply for EL Backlight	V_{EL}			100V/ 400Hz		-	-

OPTICAL CHARACTERISTICS

Item	Symbol	Condition	Min.	Typ	Max.	Unit	note
Viewing angle range	θ_f(12 o'clock)	When Cr≧2	35	-	-	Degree	9,10
	θ_b(6 o'clock)		40	-	-		
	θ_l(9 o'clock)		30	-	-		
	θ_r(3 o'clock)		30	35	-		
Rise Time	T_r	V_{DD}-V_{EE} =10.3V Ta=25℃		110	165	mS	
Fall Time	T_f			250	300		
Contrast	Cr		-	5.34	-		7

MECHANICAL SPECIFICATION

Product No.		MTG-S12864BFGHSEB
Module Size		75.0(W)× 52.7(H)× 9.0max(D)
Dot Size		0.40(W)mm× 0.40(H)mm
Dot Pitch		0.43(W)mm× 0.43(H)mm
Resolution		128(W)× 64(H) Dots Matrix
Duty Ratio		1/64 Duty
LCD Display Mode	STN	☑Gray Mode ☐Yellow Mode ☐Blue Mode
	FSTN	☐ Black & White(Normally White/Positive Image) ☐ Black & White(Normally White/Negative Image)
	Rear Polarizer:	☐Reflective ☑Transflective ☐Transmissive ☐ Transflective(High Transmissive)
Viewing Direction		☑6 O'clock ☐12 O'clock ☐3 O'clock ☐9 O'clock
Backlight		☐W/O ☐CCFL ☑EL ☐LED
Controller		KS0108 or compatible
DC/DC Converter		Optional
EL Driver		Without

INTERFACE PIN ASSIGNMENT

Pin No.	Pin Out	I/O	Description
1	V_{DD}	-	Logic supply voltage
2	V_{SS}	-	GND
3	V_{EE}		Supply Voltage for LCD panel.
4 | 11	DB0 | DB7	I/O	Data bus. 3-state I/O common terminal.
12	CS1	I	Chip-select for the left half of the display. Active LOW.
13	CS2	I	Chip-select for the right half of the display. Active LOW.
14	RES	I	Setting the RES signal to Low level can initialize the following registers. 1. ON/OFF register 0 set(Display off) 2. Display start line register 0 set(display starts from line 0) After releasing reset, this condition can be changed only by software.
15	R/W	I	Read/Write R/W=high：Data of DB0~DB7 can be read by CPU. R/W=low：Data of DB0~DB7 can be written into LCD driver IC at the falling edge of E when CS1 and CS2 is high.
16	D/I	I	Data/Instruction D/I=high：Indicates that data of DB0~DB7 is display data. D/I=low：Indicates that data of DB0~DB7 is instruction.
117	E	I	Enable When write(R/W=low)：Data of DB0~DB7 is latched at the fall of E When read(R/W=high)：Data is read while E is at high level.
18	FGND		Frame Ground
19	BKL_A	-	Power supply for backlight. (4.2V/100~150 mA DC for LED backlight, 110V/400Hz AC for EL)
20	BKL_K	-	

[Note 7] Definition of Operation Voltage (Vop)

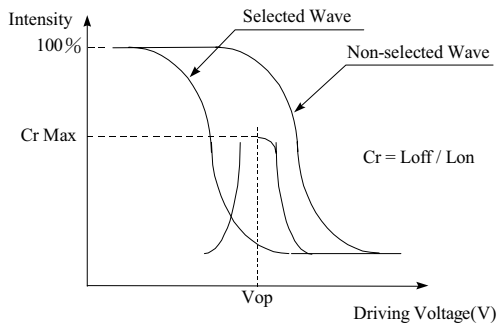

[positive type]

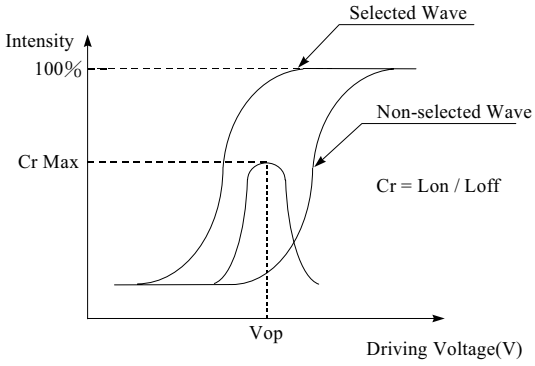

[Negative type]

[Note 8] Definition of Response Time (Tr, Tf)

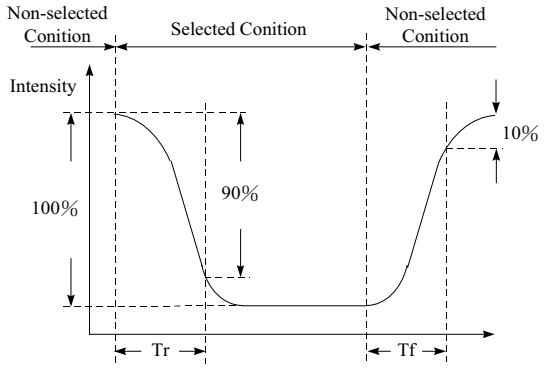

[positive type]

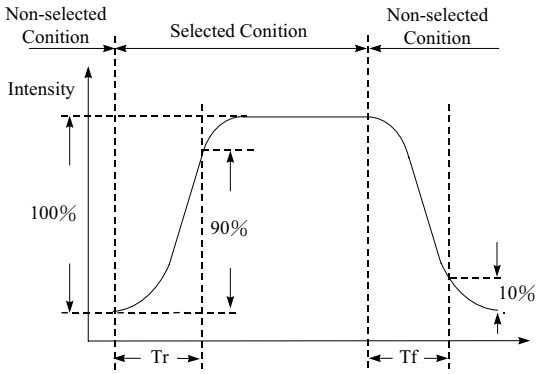

[Negative type]

Conditions:

Operating Voltage : Vop **Viewing Angle(θ, φ): 0°, 0°**

Frame Frequency : 64 Hz **Driving Wave form : 1/N duty, 1/a bias**

[Note 9] Definition of Viewing Direction

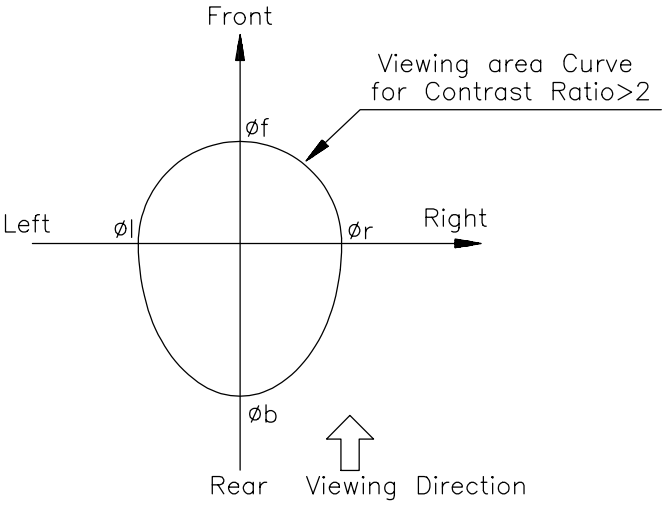

[Note 10] Definition of viewing angle

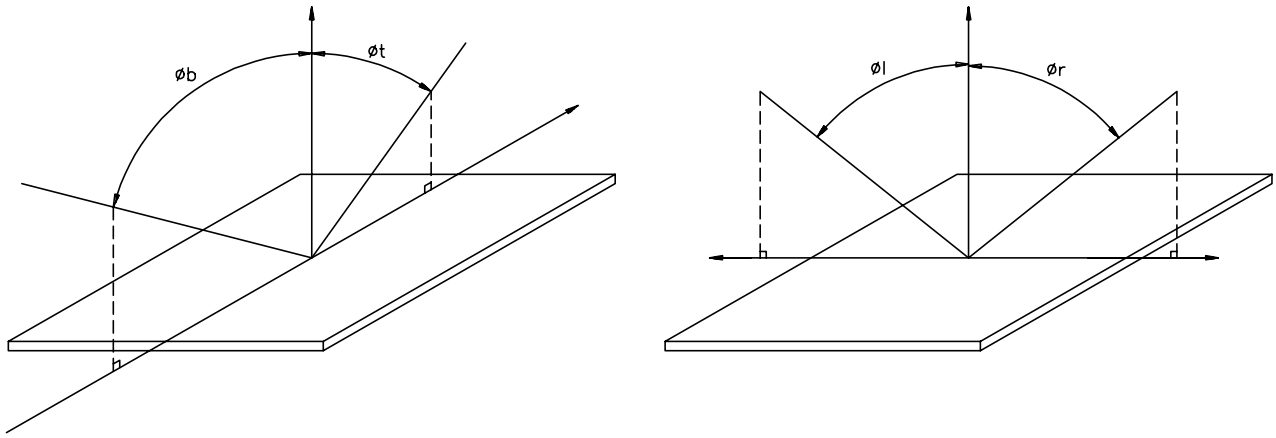

[Note 11] Description of Measuring Equipment

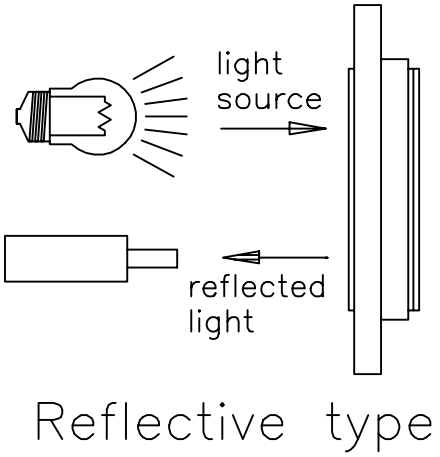

Reflective type

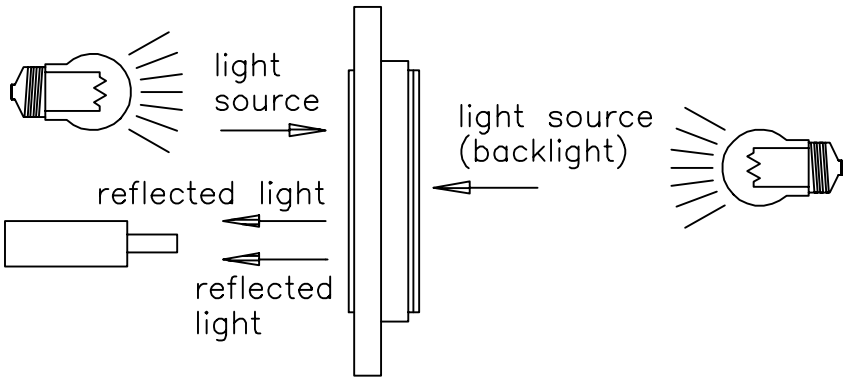

Transflective type

BLOCK DIAGRAM

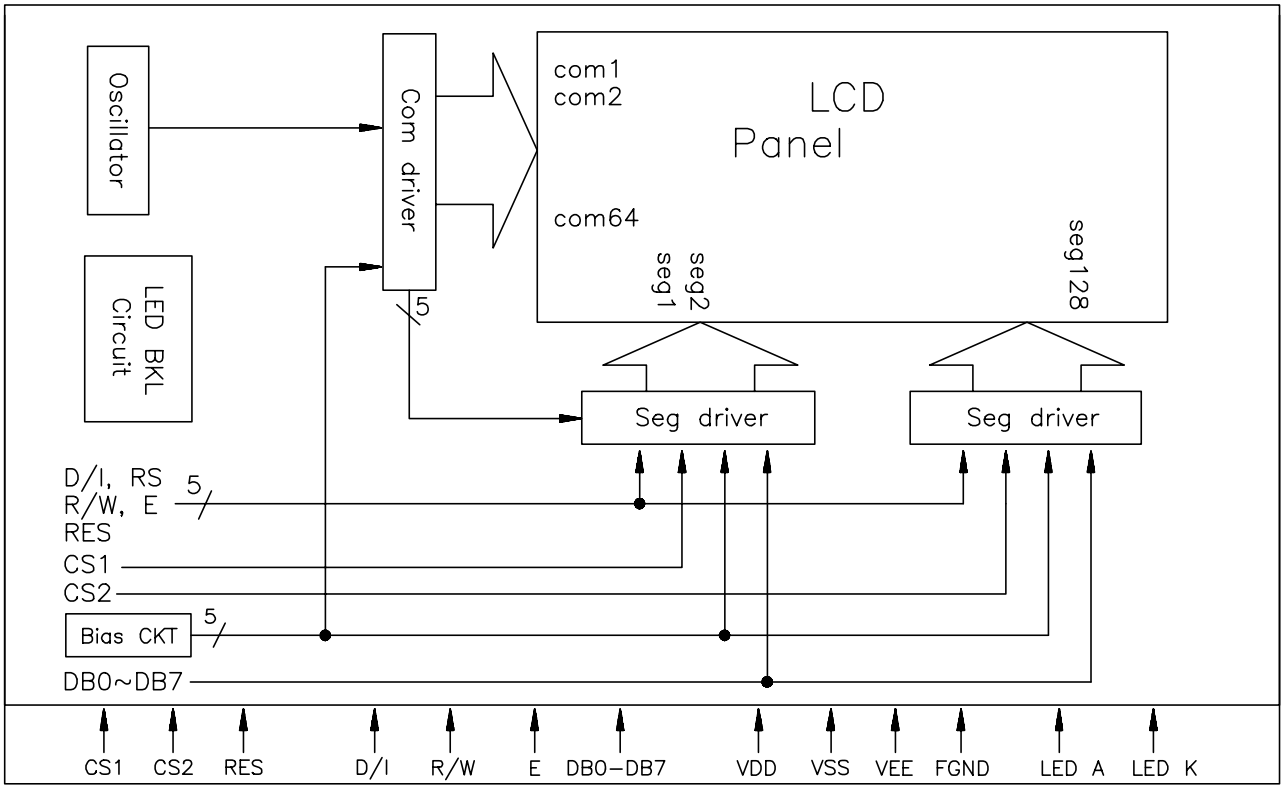

POWER SUPPLY

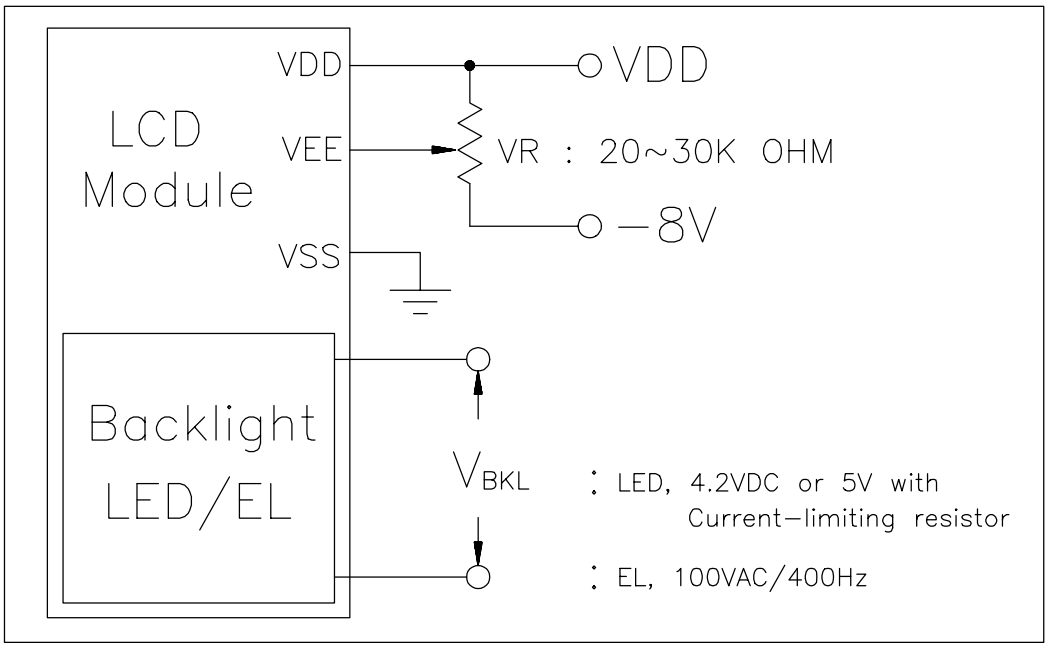

TIMING CHARACTERISTICS

MPU interface timing: (V_{SS} =0V, V_{DD}=4.5V~5.5V, T_a=-20 to 60℃)

Item	Symbol	Min.	Typ.	Max.	Unit
E Cycle Time	t_C	1000	—	—	ns
E High Level Width	t_{WH}	450	—	—	ns
E Low Level Width	t_{WL}	450	—	—	ns
E Rise Time	t_R	—	—	25	ns
E Fall Time	t_F	—	—	25	ns
Address Setup Time	t_{ASU}	140	—	—	ns
Address Hold Time	t_{AH}	10	—	—	ns
Data Setup Time	t_{DSU}	200	—	—	ns
Data Delay Time	t_D	—	—	320	ns
Data Hold Time(Write)	t_{DHW}	10	—	—	ns
Data Hold Time(Read)	t_{DHR}	20	—	—	ns

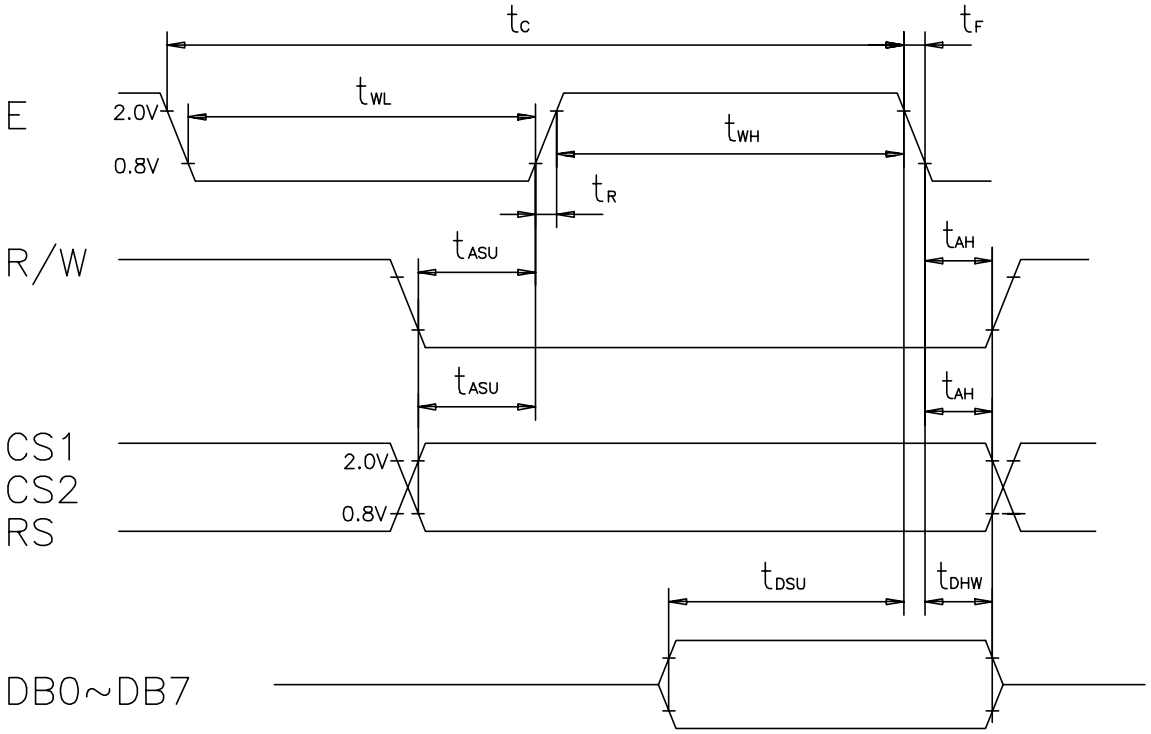

MPU Write Timing

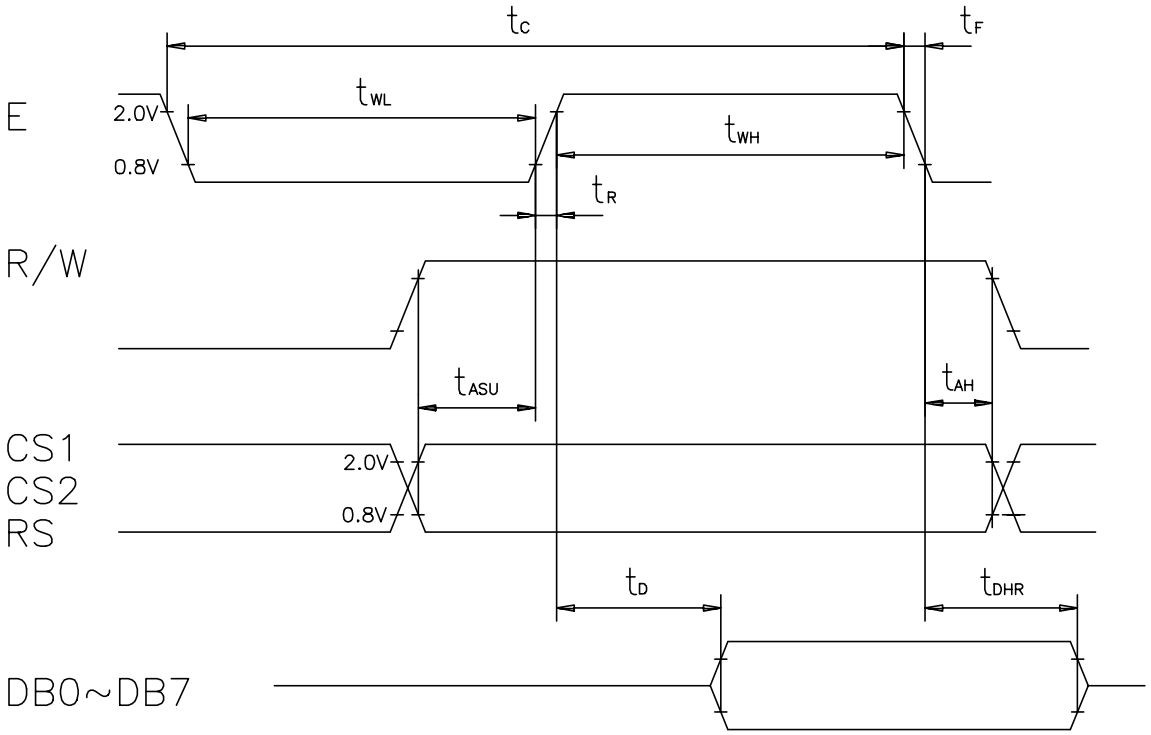

MPU Read Timing

DISPLAY COMMANDS

The display commands shown below control the internal state of the LCD driver ICs. Commands are sent from CPU to LCD module for the display control.

Command	RS	R/W	DB7	DB6	DB5	DB4	DB3	DB2	DB1	DB0	Function
Display ON/OFF	0	0	0	0	1	1	1	1	1	1/0	To control the display ON or OFF. The internal status and display RAM data are not affected. 0:OFF, 1:ON
Set address (Y address)	0	0	0	1	Y address (0~63)						To set the Y address in the Y address counter.
Set page (X address)	0	0	1	0	1	1	1	Page(0~7)			To set the X address at the X address register.
Display Start Line	0	0	1	1	Display Start Line(0~63)						To indicate the display data RAM displayed at the top of the screen.
Status Read	0	1	Busy	0	ON/ OFF	Rese t	0	0	0	0	To read status of the LCD controller IC: Busy 0:Ready, 1: In operation ON/OFF: 0:Display ON, 1:Display OFF Reset: 0:Normal, 1:Reset
Write display data	1	0	Write Data								To write data into display data RAM. Y address is increased by 1 after this command.
Read Display data	1	1	Read Data								To read data from display data RAM to the data bus.

MEMORY MAPPING

Relationship between RAM data and display

		RAM Y address(Y0 ~Y127)													Data
1st page(X=0)	Line 0→	0	1	1	1	0	0	……	0	0	1	0	0	0	←DB0(LSB)
	Line 1→	1	0	0	0	1	0	……	0	0	1	1	0	0	←DB1
	Line 2→	1	0	0	0	1	0	……	0	0	1	0	1	0	←DB2
	Line 3→	1	0	0	0	1	0	……	0	0	1	0	1	0	←DB3
	⋮	1	1	1	1	1	0	……	0	0	1	0	0	0	←DB4
		1	0	0	0	1	0	……	1	1	1	0	0	0	←DB5
		1	0	0	0	1	0	……	1	1	1	0	0	0	←DB6
	Line 7→	0	0	0	0	0	0	……	0	0	0	0	0	0	←DB7(MSB)
2nd page(X=1)	Line 8→	1	1	1	1	0	0	……	0	1	1	1	0	0	←DB0(LSB)
	Line 9→	1	0	0	0	1	0	……	0	1	0	0	1	0	←DB1
	Line 10→	1	0	0	0	1	0	……	0	1	0	0	1	0	←DB2
		1	1	1	1	0	0	……	1	1	1	0	1	0	←DB3
	⋮	1	0	0	0	1	0	……	0	1	0	0	1	0	←DB4
		1	0	0	0	1	0	……	0	1	0	0	1	0	←DB5
		1	1	1	1	0	0	……	0	1	1	1	0	0	←DB6
	Line 15→	0	0	0	0	0	0	……	0	0	0	0	0	0	←DB7(MSB)
	⋮							……							
8th page(X=7)	Line 56→	1	0	0	0	1	0	……	0	0	0	0	0	0	←DB0(LSB)
		1	0	0	0	1	0	……	0	0	0	0	0	0	←DB1
	⋮	1	0	0	0	1	0	……	0	1	0	0	1	0	←DB2
		1	1	1	1	1	0	……	1	0	1	0	1	0	←DB3
		1	0	0	0	1	0	……	1	0	0	1	0	0	←DB4
		1	0	0	0	1	0	……	1	0	0	1	0	0	←DB5
	Line 62→	1	0	0	0	1	0	……	0	1	1	0	1	0	←DB6
	Line 63→	0	0	0	0	0	0	……							←DB7(MSB)

ADDRESS CONFIGURATION OF DISPLAY DATA RAM

Y address

0 1 2 3 ……126 127

X=0→	DB0 To DB7	Page0	Line0 To Line7
X=1→	DB0 To DB7	Page1	Line8 To Line15
X=2→	DB0 To DB7	Page2	Line16 To Line23
X=3→	DB0 To DB7	Page3	Lint24 To Line31
X=4→	DB0 To DB7	Page4	Line32 To Line39
X=5→	DB0 To DB7	Page5	Line40 To Line47
X=6→	DB0 To DB7	Page6	Line48 To Line55
X=7→	DB0 To DB7	Page7	Line56 To Line63

Address configuration of Display Data RAM

RELIABILITY TEST

No	Item	Conditions		Note
1	High Temp. Operation	70℃	240 Hr	
2	High Temp. Storage	80℃	240 Hr	
3	Low Temp. Operation	-20℃	240 Hr	
4	Low Temp. Storage	-30℃	240 Hr	
5	High Temp./Humid Storage	60℃ 90%RH	240 Hr	
6	Thermal Shock	-20℃ ,30min +60℃ ,30min	10 cycles	
7	Vibration Test (IEC-68-2-6)	Frequency : 10~55 Hz Duration : 20 times, 6 min/time Amplitude : 0.75 mm	-	
8	Shock (IEC 68-2-27)	Duration : 11 mS Acceleration : 100g	-	X, Y, Z direction

APPEARANCE CHECK

CONDIITON OF APPEARANCE CHECK:

(1)Specimen shall be checked by eyes in distance of 30cm under 40w-fluorescence lamp.

(2)Checking direction shall be in 45 degree from perpendicular line op specimen surface.

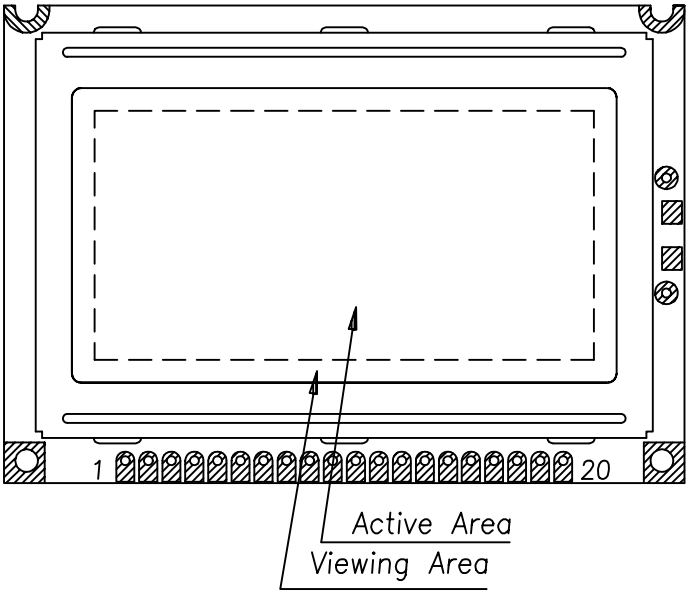

HANDLING PRECAUTIONS

(1) Treat polarizer very carefully since it is easy to be damaged.

(2) When cleaning the display surface, use soft cloth (e.g. gauss) with a solvent (recommended below) and wipe lightly.

- ethyl alcohol
- iso-prcolol

Do not wipe the display surface with dry or hard materials that will damage the polarizer surface.

Do not use the following solvents:

- water
- ketone
- aromatics

(3) Direct current causes electro-chemical reaction with remarkable degradation of the display quality. Give careful consideration to prevent direct current at ON/OFF timing and during operation.

(4) Avoid strong shock and drop from the height.

(5) To prevent LCD panels from degradation, do not operate or store them exposed directly to sunshine or high temperature/humidity.

(6) Give careful consideration to avoid electrical static discharge with causes uneven contrast.

(7) Even a small condensation on the contact pads (terminals) causes electro-chemical reaction which makes missing row and column. Give careful attention to avoid condensation. When assembling with zebra connector, clean the surface of the pads with alcohol and keep the air very clean.

LCD PRODUCT QUALITY STANDARD

DISPLAY APPEARANCE

No	Item	Criteria
1	inclusions (black spot, white spot, dust)	(1)round type diameter mm(a*) no of defect* a≦0.20 neglect 0.20＜a≦0.35 5max 0.35＜a none (2)linear type length mm(l) width mm(W) no. of defect na W≦0.03 neglect l≦3 0.03＜W≦0.08 6 3＜l 0.08＜W none
2	scratch	1.scratch on protective film is permitted. 2.scratch on polarizer shall be as follow: (1)round type diameter mm(a*) no of defect a≦0.15 neglect 0.15＜a≦0.20 2 max 0.20＜a none (2)linear type be judged bye 1.-(2) linear type
3	dent	diameter ＜ 1.5mm
4	bubble	not exceeding 0.5mm average diameter is acceptable between glass and polarizing film
5	pin hole	(a+b)/2 ≦ 0.15mm maximum number: ignored 0.15＜(a+b)/2≦0.20mm maximum number:10
6	dot defect	(a+b)/2≦0.20mm maximum number: ignored 0.20＜(a+b)/2≦0.30mm maximum number:5 x=width
7	contrast irregularity(spot)	diameter spec no of defect a≦0.50mm neglect 0.50＜a≦0.75 5 0.75＜a≦1.00 3 1.00＜a none
8	dot width	design width ±15%
9	color tone and uniformity	obvious uneven color is not permitted

REVISION HISTORY

Revision Content	Page	Date
Pin Assignment, #12 and #13 changed to CS1\ and CS2\	8	1999/12/10