# MX09

## Hazardous Duty 90mm Frame Size

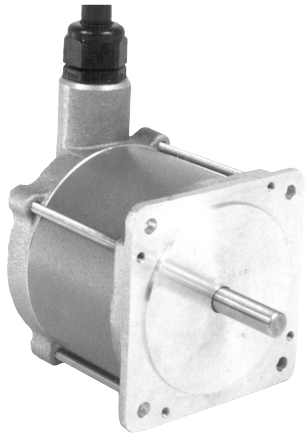

- Up to 150% rated torque reserve capacity
- ± 3% typical step accuracy
- Hazardous Duty:
  UL Class 1, Division 1, Group D

| 4-CONNECTION STEP MOTORS | | | | | | | | | | |
|---|---|---|---|---|---|---|---|---|---|---|
| *Model Number | Min. Holding Torque Bipolar 2Ø on oz-in (N-cm) | Winding Specifications | | | | Rotor Inertia oz-in-s² (kg-cm²) | Weight -Ship lb (kg) | Maximum Shaft Load | | Min. Residual Torque oz-in (N-cm) |
| | | Voltage (VDC) | Current (amperes) | Resistance (ohms) | Inductance (mH) | | | Overhang lb (kg) | Thrust lb (kg) | |
| MX91-FF-206U | 180 (127) | 3.0 | 3.0 | 1.0 | 10 | 0.0095 (0.67) | 6 (2.7) | 25 (11) | 50 (23) | 2.0 (1.4) |
| MX91-FF-402U | | 2.9 | 4.0 | 0.72 | 6.0 | | | | | |
| MX91-FF-403U | | 1.1 | 6.0 | 0.18 | 1.5 | | | | | |
| MX92-FF-206U | 370 (261) | 4.0 | 4.0 | 1.0 | 11 | 0.0174 (1.23) | 9 (4.1) | 25 (11) | 50 (23) | 4.0 (2.8) |
| MX92-FF-401U | | 1.9 | 7.0 | 0.28 | 2.8 | | | | | |
| MX93-FF-206U | 550 (388) | 3.9 | 4.0 | 0.90 | 13 | 0.0265 (1.87) | 11 (5) | 25 (11) | 50 (23) | 7.0 (4.9) |
| MX93-FF-401U | | 3.2 | 5.0 | 0.65 | 8.0 | | | | | |
| MX93-FF-402U | | 1.1 | 7.0 | 0.16 | 2.0 | | | | | |
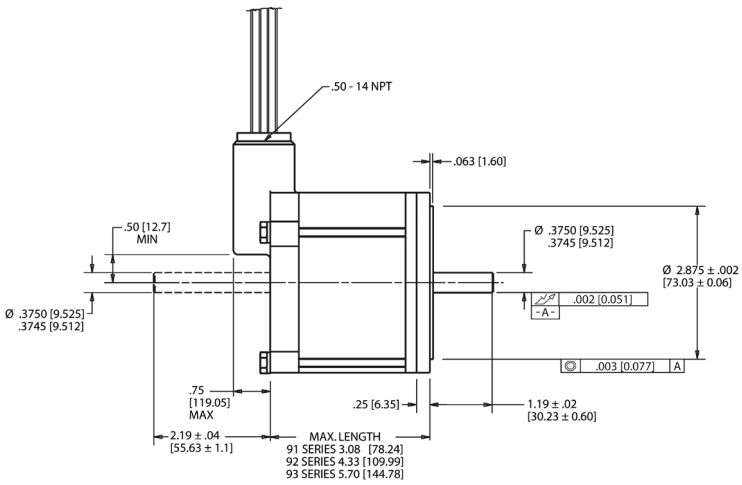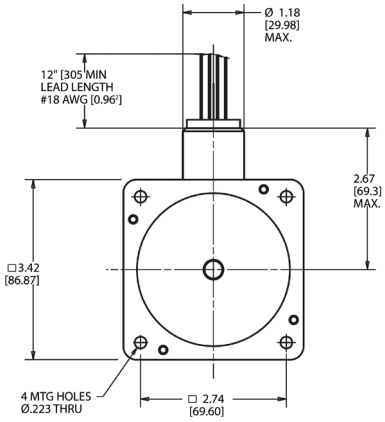
* Change U to EU for double-ended shaft
NOTE: Refer to MOTIONEERING® for speed torque curves