OD1225 VXE Series

DC Fans - 12, 24, 48V
120mm x 25mm (4.7" x 1.0")

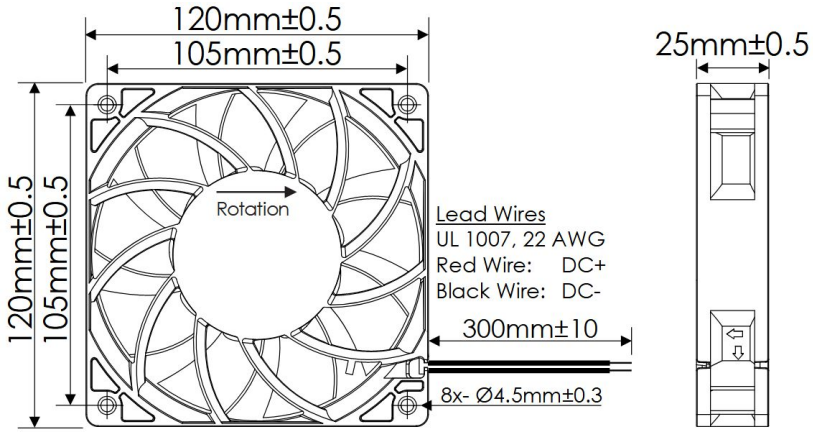

Frame	PBT, UL94 V-0 Plastic
Impeller	PBT, UL94 V-0 Plastic
Connection	2x Lead Wires, 22 AWG
Motor	Brushless DC, Auto Cutoff, Auto Restart, Polarity Protected, Electronically Protected
Bearing System	Ball Bearings
Dielectric Strength	500VDC/min, <1mA
Insulation Resistance	≥10MΩ @ 500 VDC

Operating Temperature
-20°C ~ +65°C

Storage Temperature
-25°C ~ +75°C

Life Expectancy
70,000 Hours (L10 at 40°C)

Available Options
PWM Speed Control Input
Thermal Speed Control
0-10V Speed Control
Tachometer Output
Alarm Output
IP Ratings

Weight: 0.45 lbs

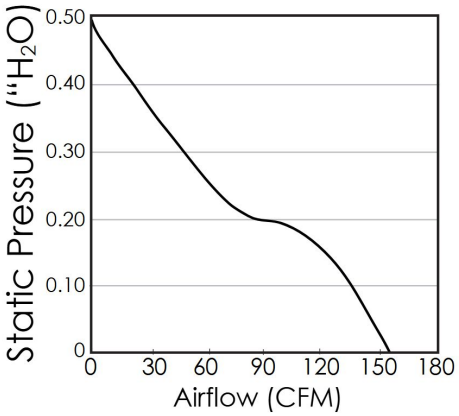

Part Number	Rated Voltage (Volts DC)	Voltage Range (Volts DC)	Input Power (Watts Max)	Rated Current (Amps Max)	Rated Speed (RPM)	Max Airflow (CFM)	Noise Level (dBA)	Max Static Pressure ("H_2O)
OD1225-12HBVXE	12	10 ~ 13.8	16.8	1.40	4000	158.7	57.3	0.49
OD1225-24HBVXE	24	15 ~ 26	20.4	0.85	4000	158.7	57.3	0.49
OD1225-48HBVXE	48	28 ~ 52	14.4	0.30	4000	158.7	57.3	0.49

Knight Electronics, Inc.
10557 Metric Drive
Dallas, TX 75243
214-340-0265

Revised 3/7/2023
m0

RoHS

Orion Fans
Information and data is subject to change without prior notification

OD1225 VXE Series with PWM and Tach

DC Fans - 12, 24, 48V
120mm x 25mm (4.7" x 1.0")

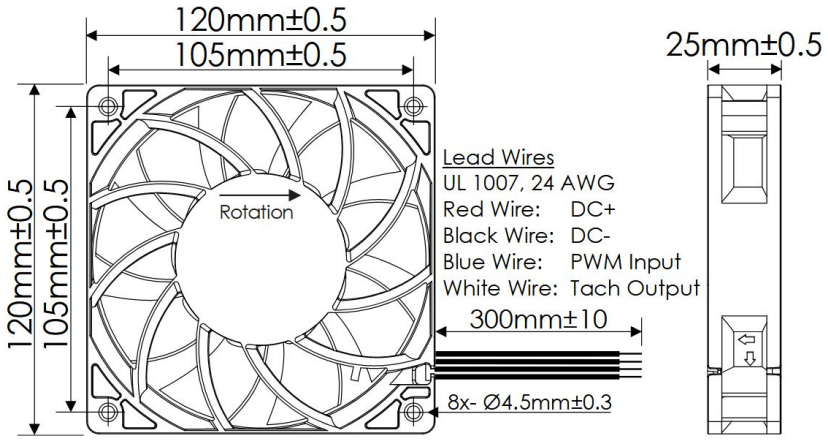

Frame	PBT, UL94 V-0 Plastic
Impeller	PBT, UL94 V-0 Plastic
Connection	4x Lead Wires, 24 AWG
Motor	Brushless DC, Auto Cutoff, Auto Restart, Polarity Protected, Electronically Protected
Bearing System	Ball Bearings
Dielectric Strength	500VDC/min, <1mA
Insulation Resistance	≥10MΩ @ 500 VDC

Operating Temperature
-20°C ~ +65°C

Storage Temperature
-25°C ~ +75°C

Life Expectancy
70,000 Hours (L10 at 40°C)

Installed Options
PWM Speed Control Input
Open Collector Tach Output

Weight: 0.45 lbs

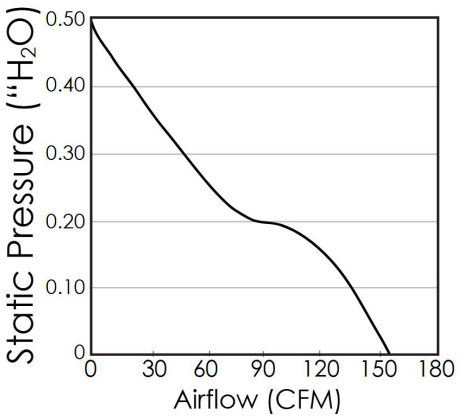

Part Number	Rated Voltage (Volts DC)	Voltage Range (Volts DC)	Input Power (Watts Max)	Rated Current (Amps Max)	Rated Speed (RPM)	Max Airflow (CFM)	Noise Level (dBA)	Max Static Pressure ("H_2O)
OD1225-12HBVXE10A	12	10 ~ 13.8	16.8	1.40	4000	158.7	57.3	0.49
OD1225-24HBVXE10A	24	15 ~ 26	20.4	0.85	4000	158.7	57.3	0.49
OD1225-48HBVXE10A	48	28 ~ 52	14.4	0.30	4000	158.7	57.3	0.49

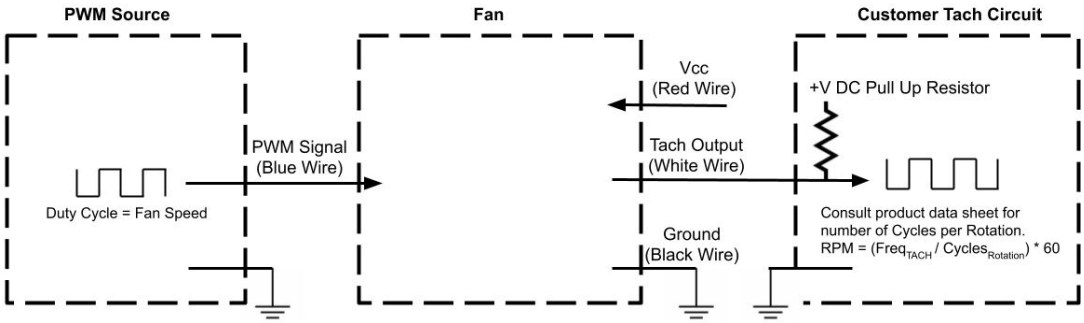

Tach Max Pullup Voltage:	Fan Vcc
Tach Max Sink Current:	5mA
Tach Cycles per Rotation:	2
PWM Max High Voltage:	5V
PWM Max Sink Current:	5mA
PWM Frequency Range:	1KHz-100KHz
PWM Typical Frequency:	25KHz
RPM at 0% Duty Cycle:	0 RPM

RPM will be full speed if PWM input is disconnected.

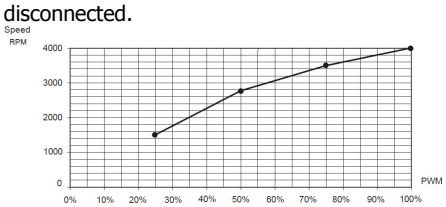

Knight Electronics, Inc.
10557 Metric Drive
Dallas, TX 75243
214-340-0265

Revised 3/7/2023
m0

RoHS

Orion Fans
Information and data is subject to change without prior notification

OD1225 VXE Series with Tach

DC Fans - 12, 24, 48V
120mm x 25mm (4.7" x 1.0")

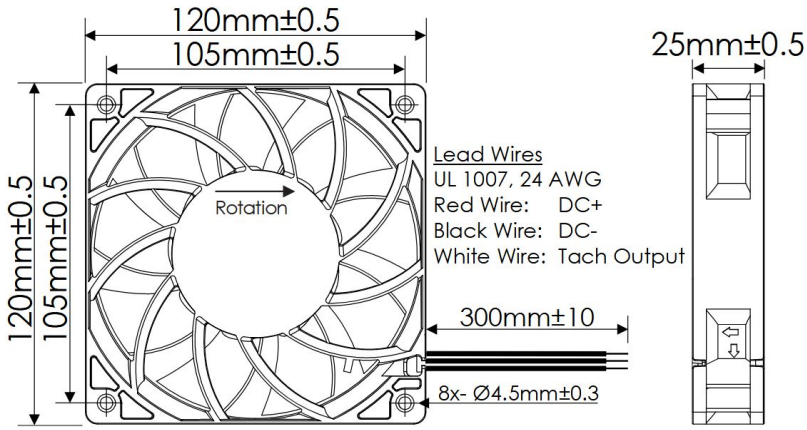

Frame	PBT, UL94 V-0 Plastic
Impeller	PBT, UL94 V-0 Plastic
Connection	3x Lead Wires, 24 AWG
Motor	Brushless DC, Auto Cutoff, Auto Restart, Polarity Protected, Electronically Protected
Bearing System	Ball Bearings
Dielectric Strength	500VDC/min, <1mA
Insulation Resistance	≥10MΩ @ 500 VDC

Operating Temperature
-20°C ~ +65°C

Storage Temperature
-25°C ~ +75°C

Life Expectancy
70,000 Hours (L10 at 40°C)

Installed Options
Open Collector Tach Output

Weight: 0.45 lbs

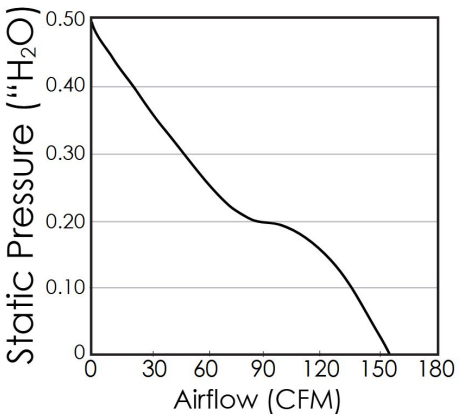

Part Number	Rated Voltage (Volts DC)	Voltage Range (Volts DC)	Input Power (Watts Max)	Rated Current (Amps Max)	Rated Speed (RPM)	Max Airflow (CFM)	Noise Level (dBA)	Max Static Pressure ("H_2O)
OD1225-12HBVXE01A	12	10 ~ 13.8	16.8	1.40	4000	158.7	57.3	0.49
OD1225-24HBVXE01A	24	15 ~ 26	20.4	0.85	4000	158.7	57.3	0.49
OD1225-48HBVXE01A	48	28 ~ 52	14.4	0.30	4000	158.7	57.3	0.49

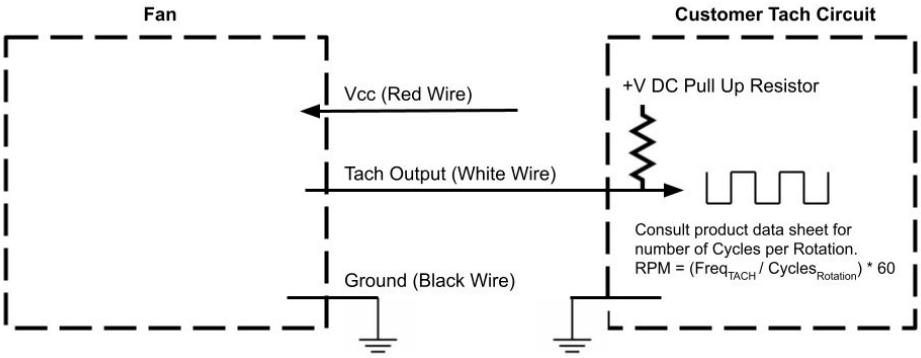

Tach Max Pullup Voltage: Fan Vcc
Tach Max Sink Current: 5mA
Tach Cycles per Rotation: 2

Knight Electronics, Inc.
10557 Metric Drive
Dallas, TX 75243
214-340-0265

Revised 3/7/2023
m0

RoHS

Orion Fans
Information and data is subject to change without prior notification