PC915

Wide Band Linear Output Type OPIC Photocoupler

■ Features

1. Wide band linear output type
   (Frequency band width : TYP. 10Hz to 8MHz)
2. Fluctuation free stable output
   (Output fluctuation : TYP. ± 5% at within operating temperature 50 000hr)
3. High isolation voltage
   (V_{iso} : 5 000V_{rms})
4. Standard dual-in-line package
5. Recognized by UL, file No, E64380

■ Applications

1. Video signal insulation in TV
2. Insulation amplifier in measuring instrument and FA equipment

■ Outline Dimensions

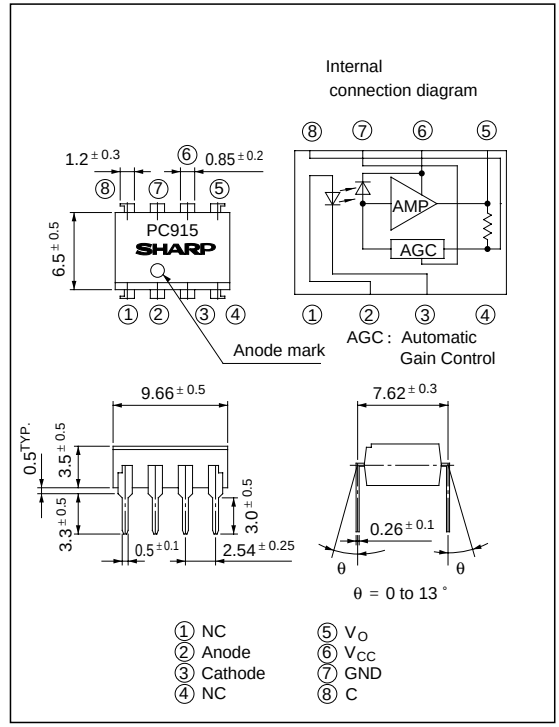

* "OPIC" (Optical IC) is a trademark of the SHARP Corporation. An OPIC consists of a light-detecting element and signal-processing circuit integrated onto a single chip.

■ Absolute Maximum Ratings

(Ta= 25°C)

Parameter		Symbol	Rating	Unit
Input	Forward current	I_F	25	mA
	Reverse voltage	V_R	6	V
	Power dissipation	P	45	mW
Output	Supply voltage	V_{CC}	- 0.5 to + 13	V
	Output power dissipation	P_O	250	mW
	Output current	I_O	- 1.0 to + 0.5	mA
*1Isolation voltage		V_{iso}	5 000	V_{rms}
Operating temperature		T_{opr}	- 25 to + 85	°C
Storage temperature		T_{stg}	- 55 to + 125	°C
*2Soldering temperature		T_{sol}	260	°C

*1 40 to 60% RH, AC for 1 minute
*2 For 10 seconds

" In the absence of confirmation by device specification sheets, SHARP takes no responsibility for any defects that occur in equipment using any of SHARP's devices, shown in catalogs, data books, etc. Contact SHARP in order to obtain the latest version of the device specification sheets before using any SHARP's device."

■ Electro-optical Characteristics

(Unless otherwise spcified, Ta = 25˚C)

Parameter			Symbol	Conditions	MIN.	TYP.	MAX.	Unit	Fig.
Input	Forward voltage		V_F	I_F = 10mA	-	1.6	1.8	V	1
	Reverse voltage		I_R	V_R = 5V	-	-	10	μA	-
	Terminal capacitance		C_t	V = 0, f = 1MHz	-	60	250	pF	-
Output	Supply current		I_{CC}	I_F = 10mA	-	9	16	mA	1
	DC output voltage		V_{ODC}	I_F = 10mA	4	6	8	V	1
	Output noise voltage		V_{ONO}	I_F = 10mA, Band width = 100Hz to 4.2MHz	-	4	-	mV_{rms}	1
Transfer characteristics	AC output voltage		V_{OAC}	R_E = 230Ω	0.8	1.0	1.2	V_{P-P}	2
	AC output voltage fluctuation	*1 Temperature characteristics	ΔV_{OAC-1}	R_E = 230Ω, Ta = 10 to 70˚C	-	± 3	-	%	2
		*2 Forward current characteristics	ΔV_{OAC-2}	R_E = 230 to 460Ω	-	± 3	-	%	2
	*3 Cut-off frequency	High frequency	f_{CH}	R_E = 230Ω	6	8	-	MHz	2
		Low frequency	f_{CL}	R_E = 230Ω	-	10	20	Hz	2
	Differential gain		DG		-	+ 3	-	%	3
	Differential phase		DP		-	- 3	-	˚	3
	Isolation resistance		R_{ISO}	DC500V, 40 to 60% RH	5×10^{10}	1×10^{11}	-	Ω	-
	Floating capacitance		C_f	V = 0, f = 1MHz	-	0.6	5	pF	-

*1 Fluctuation ratio of V_{OAC} at Ta = - 10 to 70˚C on the basis of V_{OAC} at Ta = 25˚C
*2 Fluctuation ratio of V_{OAC} at R_E = 230 to 460Ω on the basis of V_{OAC} at R_E = 230Ω
*3 Frequency of V_{IN} when V_{OAC} falls by 3dB on the basis of V_{OAC} when frequency of V_{IN} in Fig. 2 is 100kHz.

■ Recommended Operating Conditions

Parameter		Symbol	MIN.	MAX.	Unit
Input	Forward bias current	I_{FB}	8	15	mA
Output	Supply voltage	V_{CC}	8	13	V
	AC output voltage	V_{OAC}	-	4	V_{P-P}
	Output current	I_O	- 0.6	+ 0.2	mA
	C terminal capacitance	C_C	10	-	μF

■ Test Circuit

Fig.1

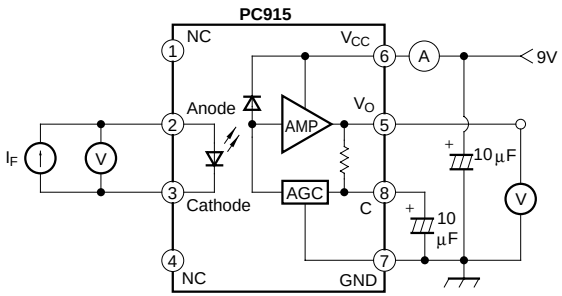

Fig. 2

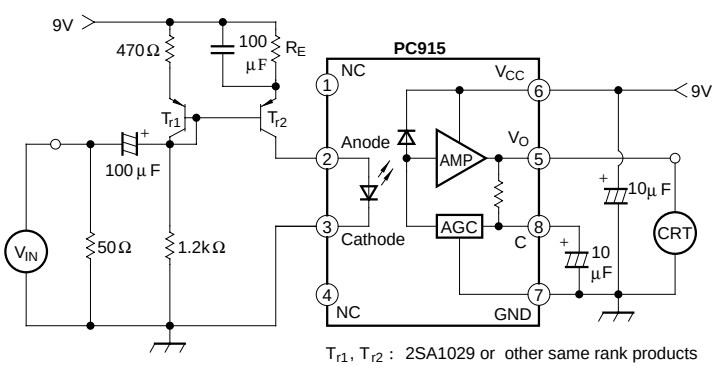

T_{r1}, T_{r2} : 2SA1029 or other same rank products

V_{IN} Waveform

(Frequency) 15kHz at measuring V_{OAC}, ΔV_{OAC-1} and ΔV_{OAC-2} and shall be swept at measuring f_{CH} and f_{CL}.

Fig. 3

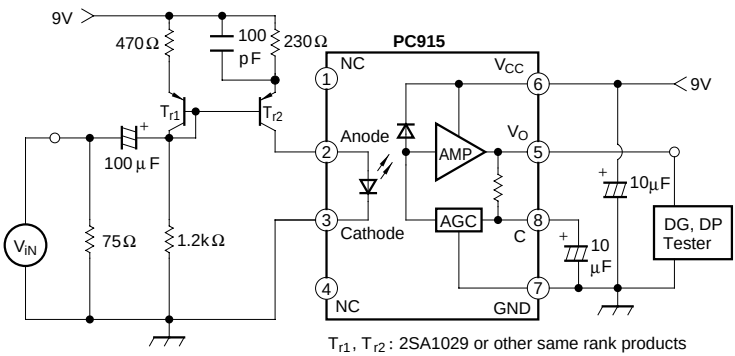

V_{IN} Waveform

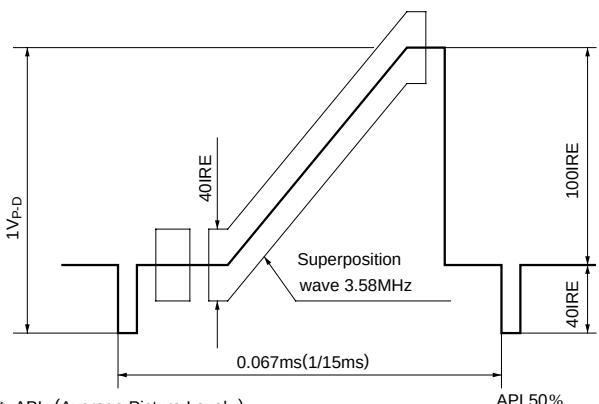

❋ APL（Average Picture Level ）
❋ IRE（International Radio Engineers ）
1IRE = 7.14mV（NTSC System）

Fig. 4 Forward Current vs. Ambient Temperature

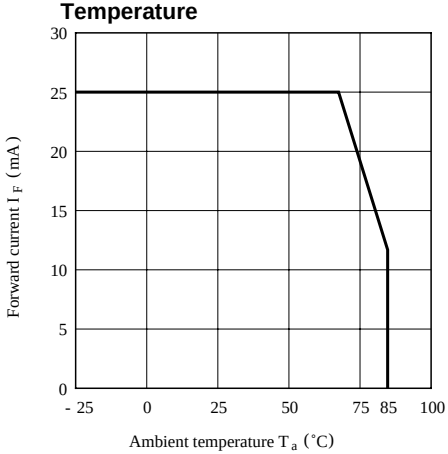

Fig. 5 Power Dissipation vs. Ambient Temperature

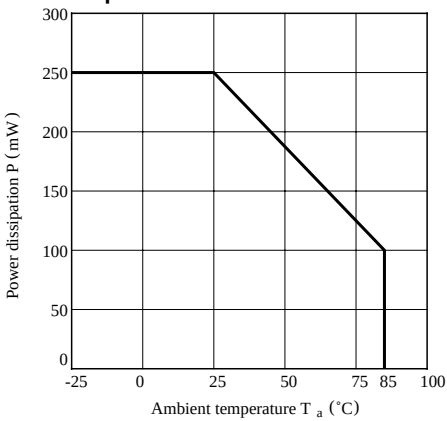

Fig. 6 Forward Current vs. Forward Voltage

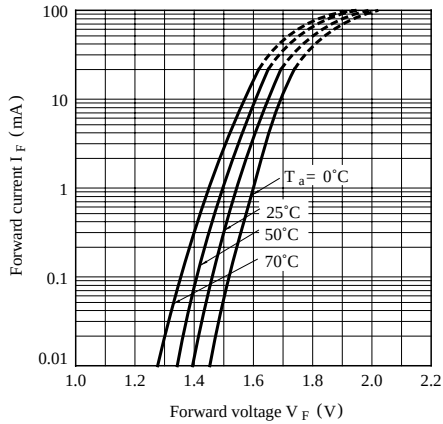

Fig. 7 Supply Current vs. Ambient Temperature

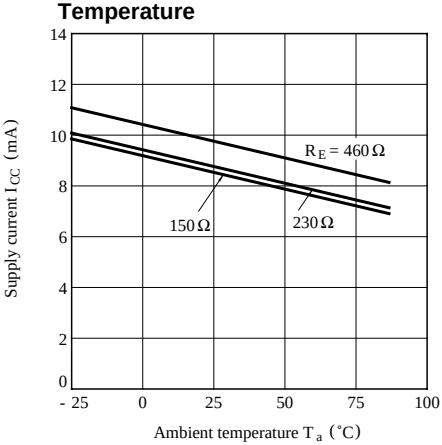

Fig. 8-a Relative AC Output Voltage 1 vs. Ambient Temperature

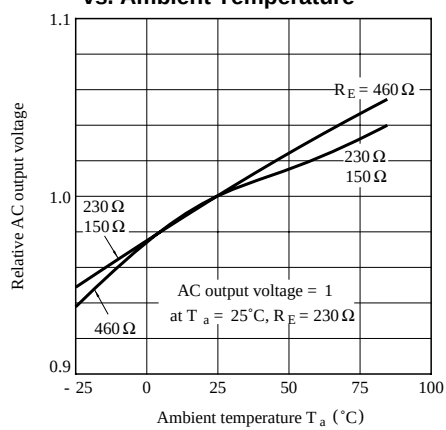

Test Circuit of Supply Current

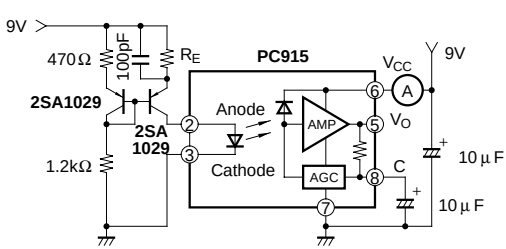

Test Circuit of Relative AC Output Voltage1 vs. Ambient Temperatue

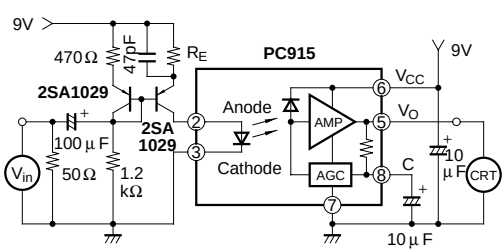

V_{in} Input Waveform

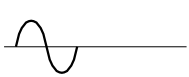

$1V_{P-P}$, f= 15kHz
Sine wave

Fig. 8-b Relative AC Output Voltage 2 vs. Frequency (1)

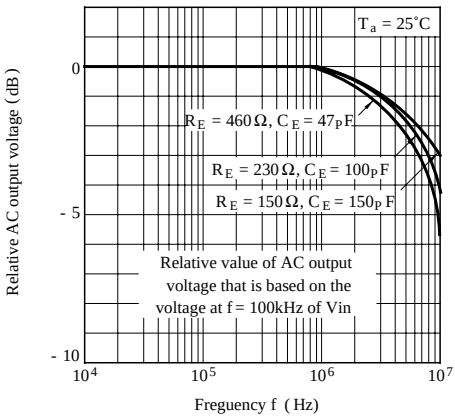

Test Circuit of Relative AC Output Voltage 2 vs. Frequency (1)

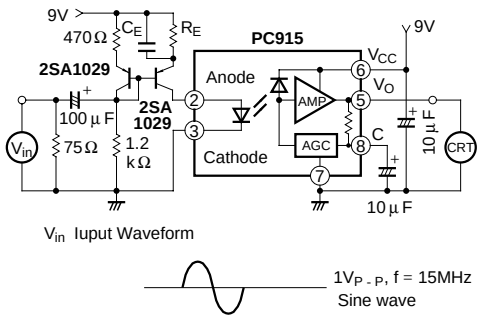

Fig. 8-c Relative AC Output Voltage 2 vs. Frequency (2)

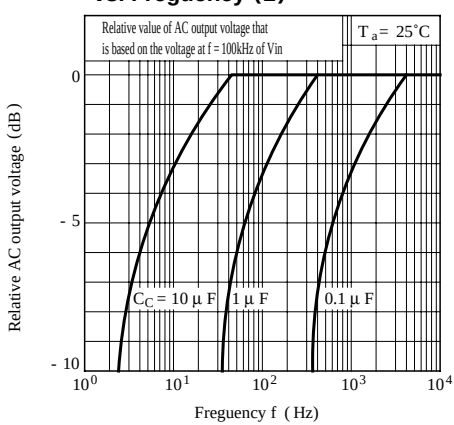

Test Circuit of Relative AC Output Voltage 2 vs. Frequency (2)

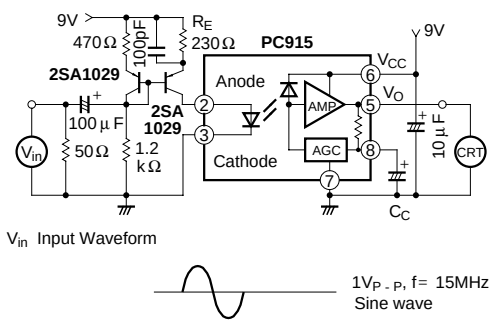

Fig. 9 Differential Gain vs. R_E

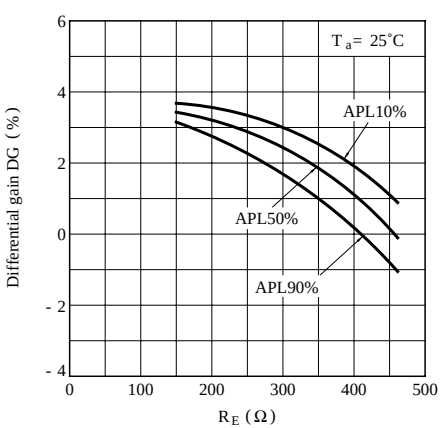

Fig.10 Differential Phase vs. R_E

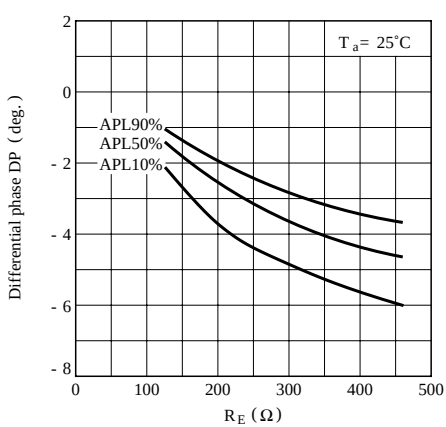

Test Circuit of Differential Gain vs. R_E and Differential Phase vs. R_E

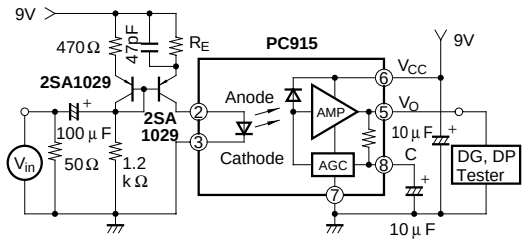

V_{in} Waveform

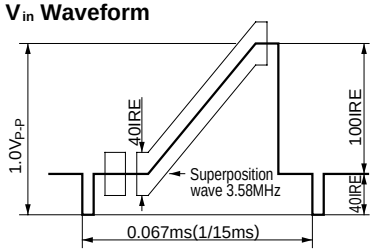

APL: Average Picture Level

■ Application Example

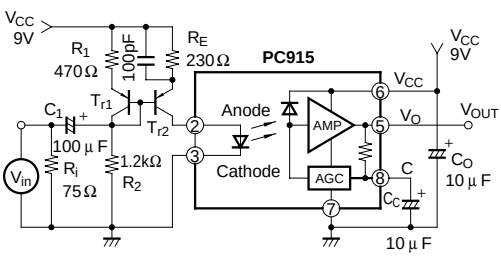

Tr_1, Tr_2 : 2SA1029 or other same rank products

$$V_{OUT} = 2.3\frac{i_s}{I_B} = 2.3\frac{V_{in}}{V_{CC} - V_E}$$

I_B : DC flowed to infrared LED
i_s : AC flowed to infrared LED
V_E : Emitter voltage of T_{r2} (Between emitter and GND)

< Example of Circuit Setting >

(1) Set for Gain

Gain is represented by the following formula ;

$G = 2.3/(V_{CC} - V_E)$

When using on condition that Gain = 1, set V_{CC}-V_E on 2.3V. So that R_1 and R_2 is determined.

(2) Set for Input Resistance

Set Ri on output impedance (usually 75Ω) of a mounting equipment.

(3) Set for R_E

When there is no signal (input signal : 0), set I_{LED} flowed into infrared LED on 10 mA.

(4) Set for Low Cut-off Frequency

Low cut-off frequency with C terminal capacitance, C_C, is represented by the following formula;

$f_C = 100/C_C$ (Hz) (C_C : μF value)

Then set Ci with input impedance of by-pass diode on as much value as possible on condition that $f_C > 1/(2\pi CiR)$ [$R = R_1R_2/(R_1 + R_2)$]

■ Precautions for Use

(1) It is recommended that a by-pass capacitor of more than 0.01μF is added between V_{CC} and GND near the device in order to stabilize power supply line.

(2) Handle this product the same as with other integrated circuits against static electricity.

(3) As for other general cautions, refer to the chapter "Precautions for Use"