Plastic Photodiode Package with Visible Blocking Filter

www.DataSheet4U.com

PDB-C158F

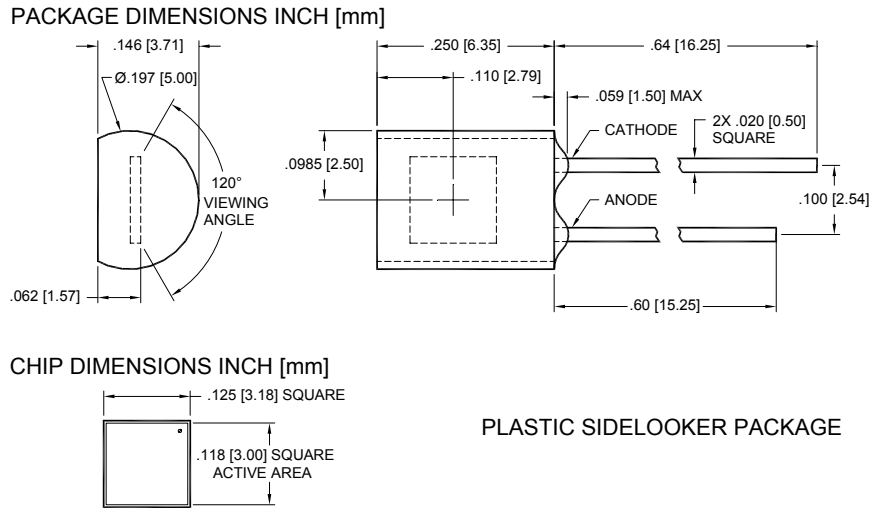

PLASTIC SIDELOOKER PACKAGE

FEATURES

- Large active area
- Photoconductive
- Low cost
- High speed

DESCRIPTION

The **PDB-C158F** is a blue enhanced PIN silicon photodiode in a photoconductive mode with a daylight filter, packaged in a plastic sidelooker package.

APPLICATIONS

- Smoke detectors
- Light pen detectors
- TV & VCR remotes
- IR data links

ABSOLUTE MAXIMUM RATING (TA)= 23°C UNLESS OTHERWISE NOTED

SYMBOL	PARAMETER	MIN	MAX	UNITS
V_{BR}	Reverse Voltage		50	V
T_{STG}	Storage Temperature	-40	+100	°C
T_O	Operating Temperature	-40	+80	°C
T_S	Soldering Temperature*		+260	°C

* 1/16 inch from case for 3 seconds max.

SPECTRAL RESPONSE

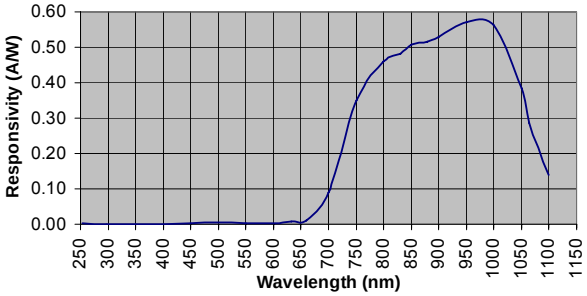

ELECTRO-OPTICAL CHARACTERISTICS RATING (TA)= 23°C UNLESS OTHERWISE NOTED

SYMBOL	CHARACTERISTIC	TEST CONDITIONS	MIN	TYP	MAX	UNITS
I_{SC}	Short Circuit Current	H = 100 fc, 2850 K	100	145		μA
I_D	Dark Current	V_R = 10 V		2	30	nA
R_{SH}	Shunt Resistance	V_R = 10 mV	100	150		MΩ
C_J	Junction Capacitance	V_R = 10 V, f = 1 MHz		10	25	pF
λrange	Spectral Application Range	Spot Scan	700		1100	nm
V_{BR}	Breakdown Voltage	I = 10 μA	30	75		V
NEP	Noise Equivalent Power	V_R = 10V @ λ=Peak		2.4×10^{-14}		W/ $\sqrt{Hz}$
t_r	Response Time	RL = 1 KΩ, V_R = 10 V		50		nS

**Response time of 10% to 90% is specified at 660nm wavelength light.

Information in this technical datasheet is believed to be correct and reliable. However, no responsibility is assumed for possible inaccuracies or omission. Specifications are subject to change without notice.

Advanced Photonix Inc. 1240 Avenida Acaso, Camarillo CA 93012 • Phone (805) 987-0146 • Fax (805) 484-9935 • www.advancedphotonix.com

www.DataSheet4U.com