THT CURRENT SENSE TRANSFORMERS & INDUCTORS

Pulse®
A TECHNITROL COMPANY

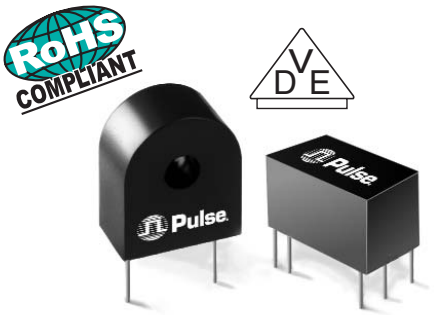

- VDE Approved
- Designed for switching power supply applications
- Transformer meets IEC950 insulation requirements
- Frequency range from 20kHz to 200kHz

Electrical Specifications @ 25°C — Operating Temperature -40°C to 130°C

Part Number Transformer with 2-1 T Primaries	Schem. Figure	Part Number Transformer with 1T Primary	Schem. Figure	Part Number Inductor without Primary	Schem. Figure	Turns N_S	Secondary Inductance MH (MIN)	Secondary Inductance Test Voltage (15.75 KHz)	RS (Ω MAX)	RT (Ω NOM)	Primary Unipolar Amp µ Sec. Rating (MAX)	Primary Bipolar Amp µ Sec. Rating (MAX)
—	1C	**PE-63586**	1A	**PE-51686**	2A	50	5.0	0.5	0.7	50	150	300
PE-64487	1C	**PE-63587**	1A	**PE-51687**	2A	100	20.0	1.0	1.40	100	300	600
PE-64488	1C	**PE-63588**	1A	**PE-51688**	2A	200	80.0	2.0	4.50	200	600	1200
PE-64517	1D	—	—	**PE-51717**	2B	50CT	5.0	0.5	0.7	50	150	300
PE-64518	1D	**PE-63618**	1B	**PE-51718**	2B	100CT	20.0	1.0	1.40	100	300	600
PE-64519	1D	**PE-63619**	1B	**PE-51719**	2B	200CT	80.0	2.0	4.50	200	600	1200
—	—	**PE-63691**	1B	—	—	300CT	180.0	3.0	11.0	300	900	1800

NOTES:

1. Maximum ratings specified with rated secondary terminating resistance and 1 turn primary.
2. Amp-microsecond (AµSec.) rating of primary equals volt microsecond (VµSec.) rating of secondary when secondary is terminated in rated resistance. (Amp—microseconds is equal to the product of a square pulse of current in amps, times the current pulse width in microseconds.
3. Maximum operating temperature 105°C (ambient plus rise).
4. When terminated with rated terminating resistance, the inductor scale factor is Vout = 1 volt per amp. for center tapped units terminating resistance for each half of winding is listed value divided by two.
5. 1 turn primary peak sense current is 20 amps for all parts listed above.
6. RoHS compliant parts are being introduced. Please contact Pulse for RoHS compliant part availability. If available, order part by adding the suffix "NL" to the part number (i.e. PE-63586 becomes PE-63586NL).

Mechanicals

Transformer

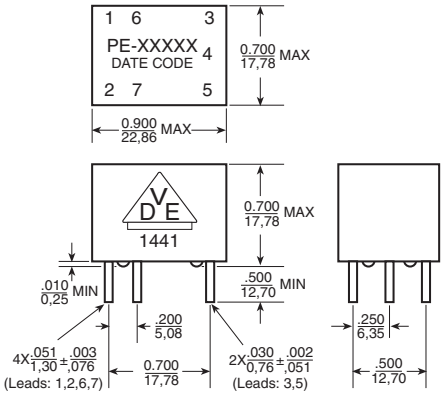

Inductor

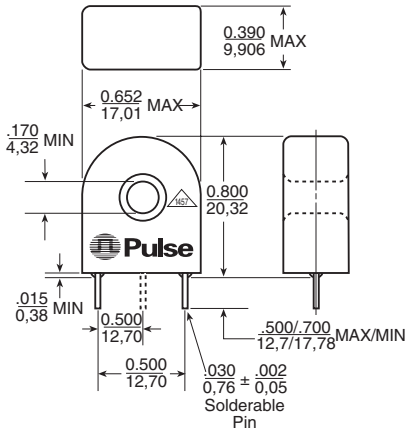

Schematics

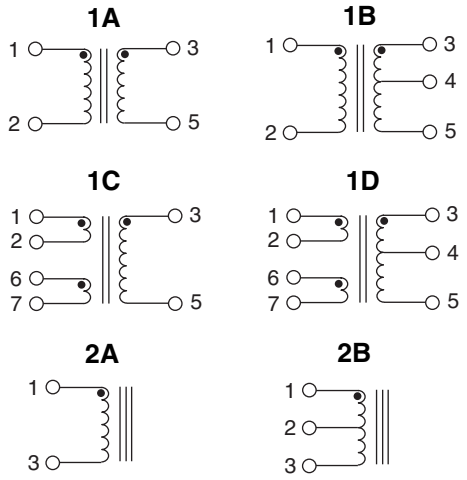

Dimensions: Inches / mm Unless otherwise specified, all tolerances are ± .005 / 0,13

For More Information:

Pulse Worldwide Headquarters
12220 World Trade Drive
San Diego, CA 92128
U.S.A.
www.pulseeng.com
TEL: 858 674 8100
FAX: 858 674 8262

Pulse Northern Europe
3 Huxley Road
Surrey Research Park
Guildford, Surrey GU2 5RE
United Kingdom
TEL: 44 1483 401700
FAX: 44 1483 401701

Pulse Southern Europe
Zone Industrielle
F-39270
Orgelet
France
TEL: 33 3 84 35 04 04
FAX: 33 3 84 25 46 41

Pulse China Headquarters
No. 1
Industrial District
Changan, Dongguan
China
TEL: 86 769 5538070
FAX: 86 769 5538870

Pulse North China
Room 1503
XinYin Building
No. 888 YiShan Road
Shanghai 200233
China
TEL: 86 21 54643211/2
FAX: 86 21 54643210

Pulse South Asia
150 Kampong Ampat
#07-01/02
KA Centre
Singapore 368324
TEL: 65 6287 8998
FAX: 65 6280 0080

Pulse North Asia
No. 26
Kao Ching Road
Yang Mei Chen
Taoyuan Hsien
Taiwan, R. O. C.
TEL: 886 3 4641811
FAX: 886 3 4641911

Performance warranty of products offered on this data sheet is limited to the parameters specified. Data is subject to change without notice. Other brand and product names mentioned herein may be trademarks or registered trademarks of their respective owners.
© Copyright, 2006. Pulse Engineering, Inc. All rights reserved.