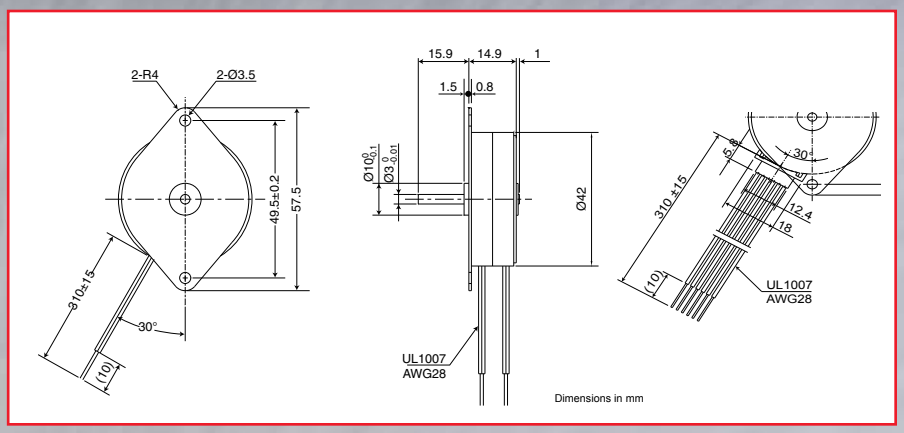

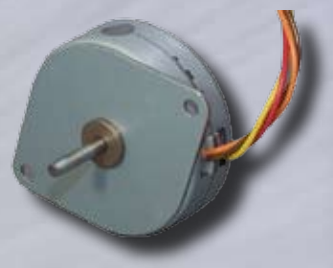

Specifications

Specification	Unit	PF(C)42T-48				PF(C)42T-96			
Type of Winding		Unipolar		Bipolar		Unipolar		Bipolar	
Excitation Mode*		Full step (2-2)				Full step (2-2)			
Step Angle	°	7.5 ±5%				3.75 ±5%			
Steps Per Revolution*		48				96			
Rated Voltage	V	12	5	12	5	12	5	12	5
Resistance	Ω	60	9.5	64	12	60	95	64	12
Inductance	mH	25	5.6	50	16	25	4	51	17
Holding Torque	mN·m	34	34	42	42	30	36	49	49
Rotor Inertia	kg·m²	14.3 x 10^{-7}				14.8 x 10^{-7}			
Starting Pulse Rate*	pps	345				450			
Slewing Pulse Rate*	pps	550				590			
Operating Temp. Range	°C	-10 to +50							
Temperature Rise*	°C	70							
Weight	g	105							

PF42T

PFC42T

Dimensions of Geared Model

PF(C)42T w/H Gear Head

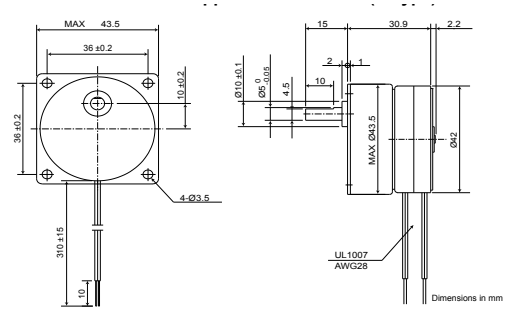

Gear Ratio	6/25	1/5	3/25	1/10	2/25	1/15	3/50	1/20	1/25
Ordinary Torque	200mN·m				250mN·m				
Destruction Torque	600mN·m				750mN·m				

Gear Ratio	1/30	1/50	1/60	2/125	1/75
Ordinary Torque	300mN·m				
Destruction Torque	900mN·m				

Gear Ratio	1/100	1/120	1/125	1/150	1/200	1/250	1/300
Ordinary Torque	400mN·m						
Destruction Torque	1200mN·m						

Torque Curve (pull-out torque)*

Bipolar Constant Voltage (48P1)

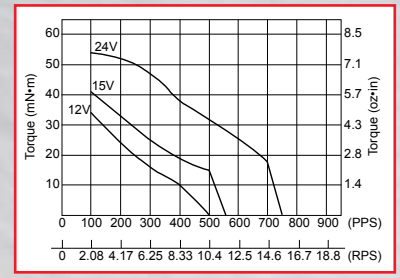

Coil Resistance: 64Ω

Bipolar Constant Current (48271)

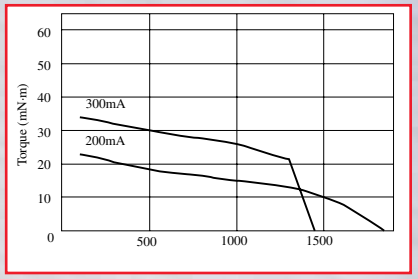

Coil Resistance: 19Ω Supply Voltage: 24V

Unipolar Constant Voltage (48C1)

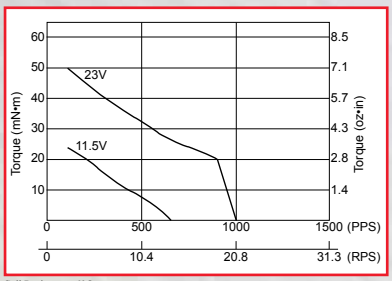

Coil Resistance: 60Ω

Uniplar Constant Current (48071)

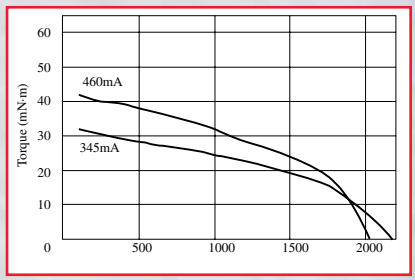

Coil Resistance: 20Ω Supply Voltage: 24V

All tin-can motor specifications are based on full-step constant voltage operation
Magnet type: Anisotropic
Note: Torque curves are for reference only and are not guaranteed.