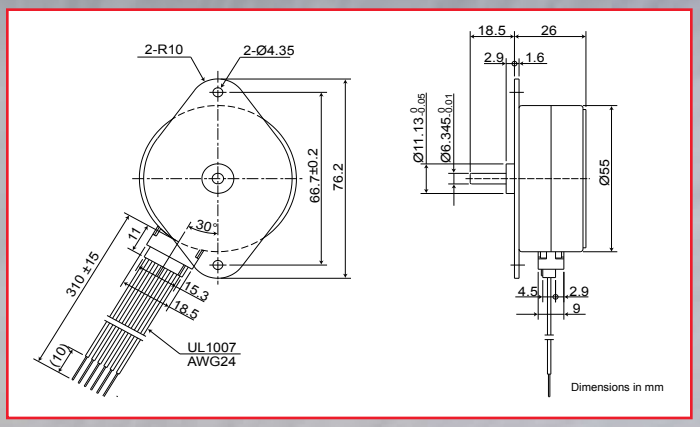

Specifications

Specification	Unit	PFC55H-48			
Type of Winding		Unipolar		Bipolar	
Excitation Mode*		Full step (2-2)			
Step Angle	°	7.5 ±5%			
Steps Per Revolution*		48			
Rated Voltage	V	12	5	12	5
Resistance	Ω	36	5	40	8
Inductance	mH	37	4.4	66	16
Holding Torque	mN·m	150	150	180	180
Rotor Inertia	kg·m²	57 x 10^{-7}			
Starting Pulse Rate*	pps	210			
Slewing Pulse Rate*	pps	230			
Operating Temp. Range	°C	-10 to +50			
Temperature Rise*	°C	55			
Weight	g	300			

Dimensions of Geared Model

PFC55H w/F(BB) Gear Head

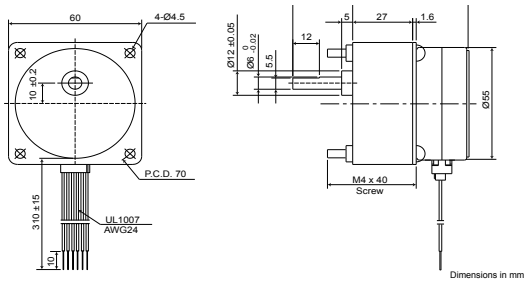

Gear Ratio	1/3	1/5	2/15	1/10	2/25	1/15	1/20
Ordinary Torque	400mN·m		500mN·m			600mN·m	800mN·m
Destruction Torque	1200mN·m		1500mN·m			1800mN·m	2400mN·m

Gear Ratio	1/25	1/30	1/50	1/60
Ordinary Torque	900mN·m	1100mN·m	1600mN·m	
Destruction Torque	2700mN·m	3300mN·m	4800mN·m	

Gear Ratio	1/75	1/100	1/125	1/150	1/180
Ordinary Torque	2500mN·m				
Destruction Torque	7500mN·m				

See page 12 for PFC55H with F gearhead ratios

Torque Curve (pull-out torque)*

Bipolar Constant Voltage (48011)

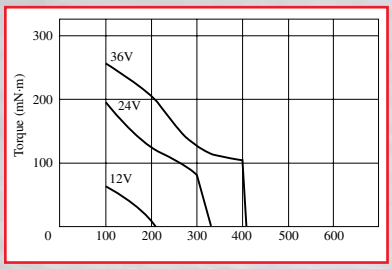

Coil Resistance: 40Ω

Bipolar Constant Current (48S1)

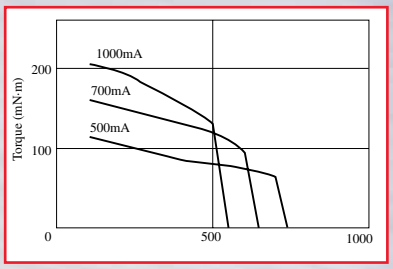

Coil Resistance: 8Ω Supply Voltage: 24V

Unipolar Constant Voltage (48C1)

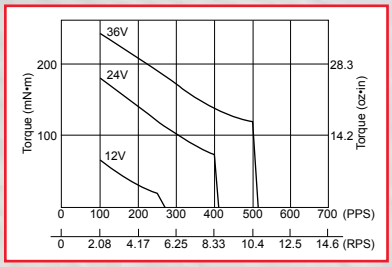

Coil Resistance: 36Ω

Unipolar Constant Current (48D1)

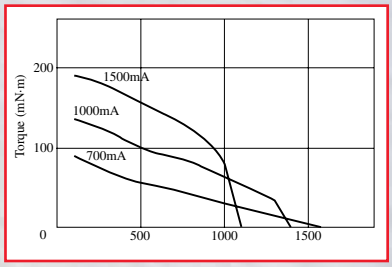

Coil Resistance: 5Ω Supply Voltage: 24V

All tin-can motor specifications are based on full-step constant voltage operation
Magnet type: Anisotropic
Note: Torque curves are for reference only and are not guaranteed.