Single-Element Pyro Detectors
For Gas Monitoring

LHi 807, PYS 4198 – High-Sensitivity Pyros

Applications
- Gas Sensing and Monitoring

Features and Benefits
- TO-5 metal housing
- Selection of narrow band Filters
- Thermal Compensation

Product Description
The LHi 807 TC series has become a standard solution for gas-sensing applications. It is available with a range of narrow band filters, as specified on page 4 of this brochure, for various gas species. The LHi 807 is usually supplied with temperature compensation by a separate "blind" sensing element.
Similar features and benefits are included with the PYS 4198, which has a large element size of 2x2 to offer more signal for non-focused optical systems. It is offered with the thermal compensation element to compensate for thermal effects caused by temperature changes of the housing.

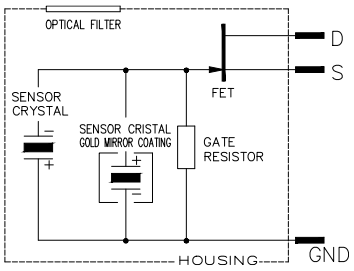

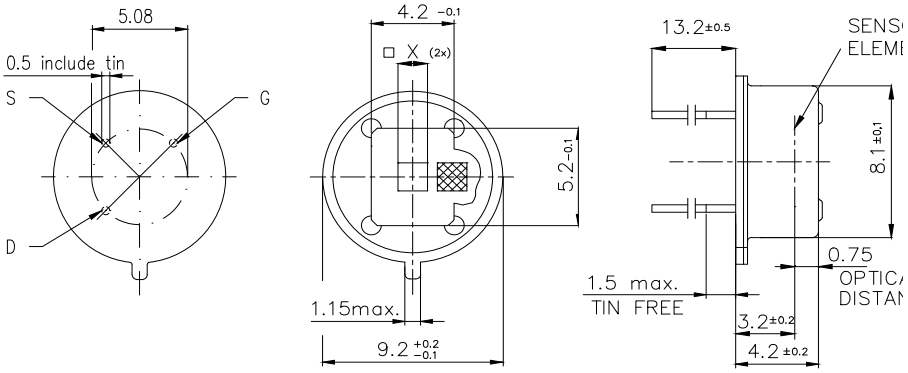

LHI 807 TC and PYS 4198 TC

Parameter	Symbol	LHI 807 TC	PYS 4198 TC	Unit	Remarks
Responsivity, min.	R_{min}	2.2	1.2	kV/W	f = 1 Hz
Responsivity, typ.	R	3.5	2.0	kV/W	f = 1 Hz
Match, max.	M_{max}	-	-	%	
Noise, max.	N_{max}	50	50	μV_{pp}	0,4…10Hz/20°C
Noise, typ.	N	15	10	μV_{pp}	0,4…10Hz/20°C
spec. Detectivity	D*	17		107cm*√Hz/W	1Hz/ 1Hz BW
Field of View, horizontal	FoV	135°	130°		unobstructed
Field of View, vertical		122°	105°		unobstructed
Source Voltage		0,2 … 1,5	0,2 … 1,5	V	47 KO, 20°C
Height	h	4.2	4.2	mm	
Optical Element Location	he /ho	3,2 / 0,75	2,9 / 1,1	mm	
Filter Size	X/Y	5,2 / 4,2	5,2 / 4,2	mm	