FOXCONN®

SPECIFICATIONS

DVI Connector

QH Series
Normal Type, T/H
1.905mm [.075"] Pitch
29 Pin

Mechanical

Mating Force: *4.50kg (9.92Lb) max.*
Unmating Force: *1.00~4.00kg (2.20~8.82Lb)*
Durability: *100 Cycles*

Electrical

Current Rating: *1.50A*
Contact Resistance: *30mΩ max.*
Dielectric Withstanding Voltage: *500V AC/1min min.*
Insulation Resistance: *1000MΩ min.*

Physical

Housing: *Thermoplastic, UL 94V-0 rated in Ivory Color*
Contact: *Copper alloy*
Plating: *See "ORDERING INFORMATION"*
Operating Temperature: *-20℃ to +85℃*
Resistance to Soldering Heat: *270℃/10sec*
Recommended Thickness of P.C.B.: *1.57[.062]*

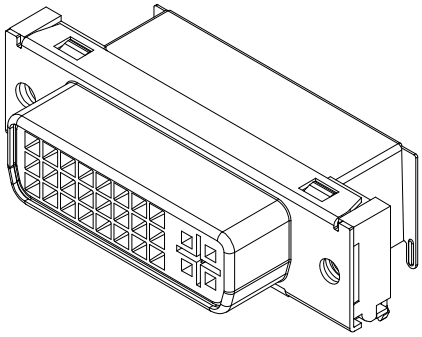

DRAWING

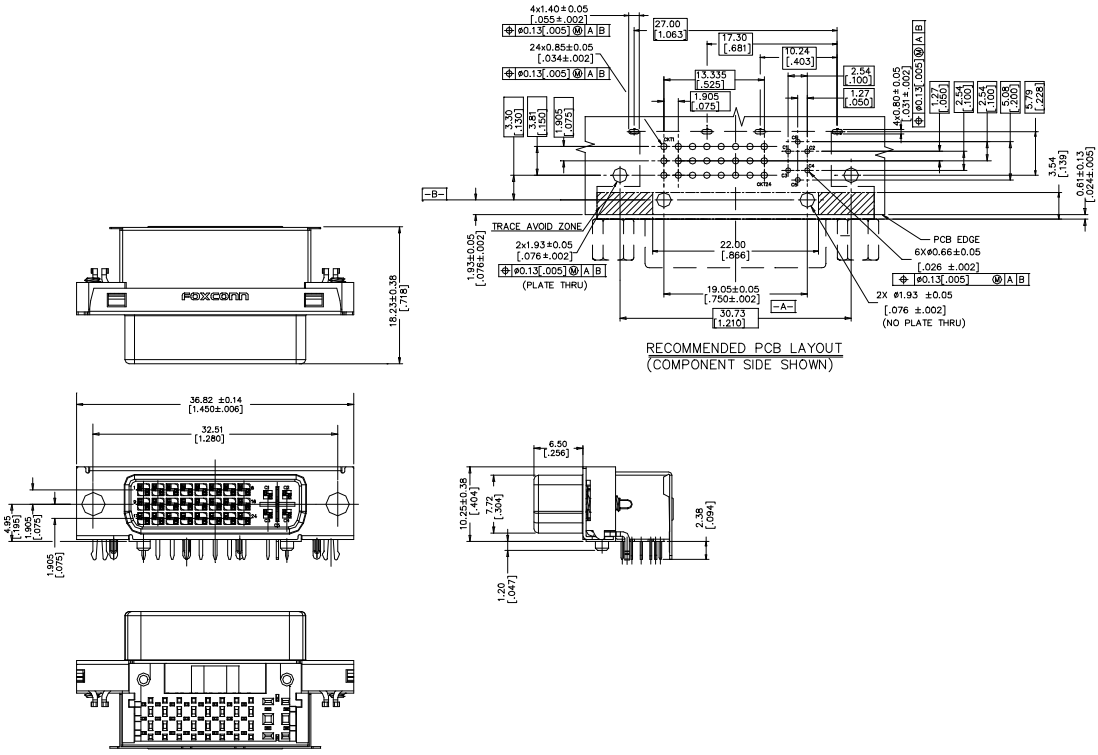

ORDERING INFORMATION

PRODUCT NO.:QH 1112 1- CA54 - 4H

- QH Series
- Body Type
  1 = RIGHT ANGLE PCB MOUNT
- Termnation Type
  1=Female
- NO. of Pos.
  12 = 24 POS
- Contact Area Plating
  1 = GOLD FLASH
- Extension Code
- Halogen Free Part Number

All specification & dimensions are subject to change, please call your nearest Foxconn sales representative for update information.

Downloaded from Arrow.com.