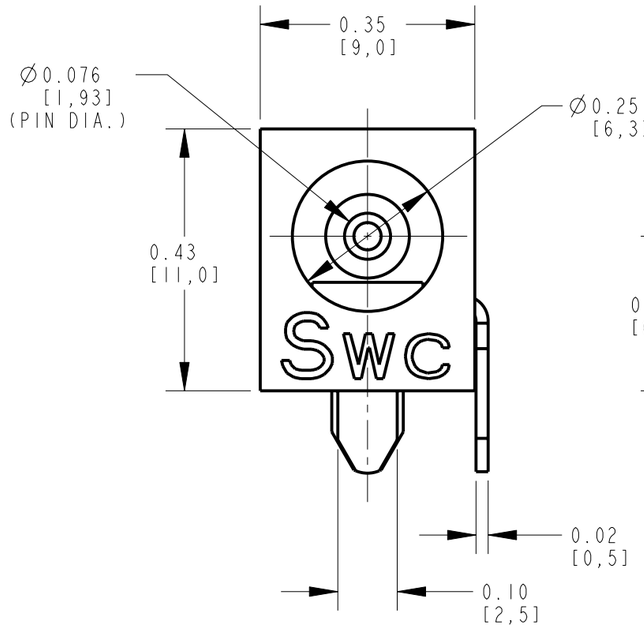

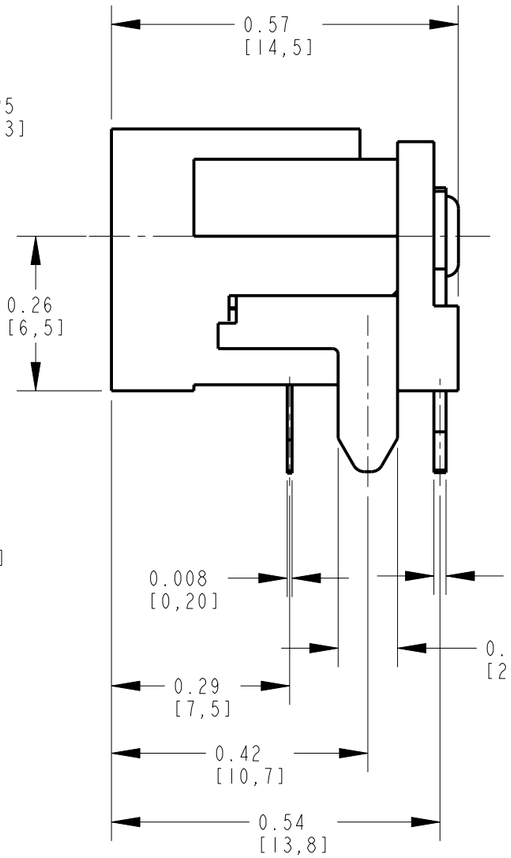

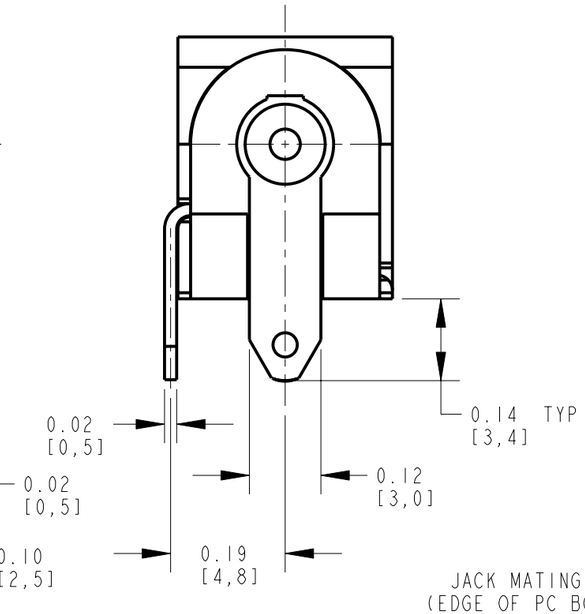

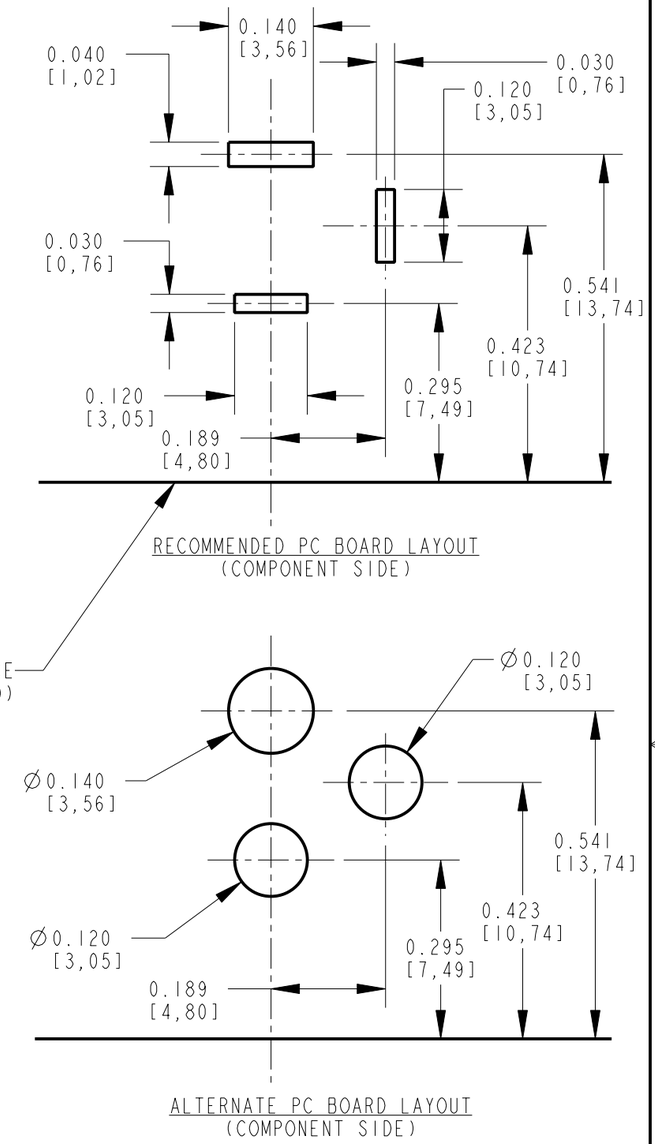

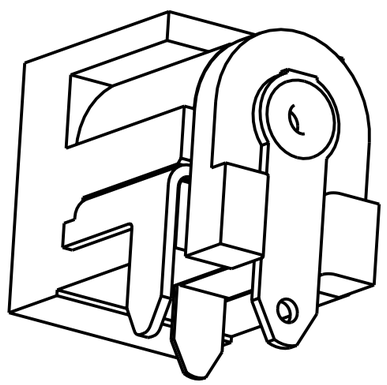

MATERIALS:

HOUSING AND COVER: HIGH GRADE THERMOPLASTIC, UL94V-0 RATED, COLOR BLACK.
CENTER PIN: BRASS, NICKEL PLATED PER QQ-N-290, CLASS 1.
PIN AND SHUNT TERMINALS: BRASS, SILVER PLATED PER QQ-S-365.
SLEEVE SPRING: SPRING COPPER ALLOY, SILVER PLATED PER QQ-S-365.

SPECIFICATIONS:

LIFE: 5000 CYCLES.
INSERTION FORCE: 5 LB [2.3 KG] MAX.
WITHDRAWAL FORCE: 0.5 LB [0.2 KG] MIN.
CONTACT RESISTANCE: 30 MILLIOHM MAX, 60 MILLIOHM MAX. AFTER TEST.
INSULATION RESISTANCE: 30 MEGAOHM MIN. @ 100VDC.
DIELECTRIC WITHSTANDING VOLTAGE: 250VAC FOR 1 MINUTE.
CURRENT (CARRYING): 5A.

www.DataSheet4U.com

CUSTOMER DRAWING

REV	ECO NUMBER	DATE	BY	APVD
H	22891	6-15-99	TJK	TJK
G	21359	9-18-96	SG	MA
F	21077	8-28-96	DA	MA
E	20441	11-8-95	MA	MA

REVISIONS

☆ STAR SYMBOL DENOTES CRITICAL DIMENSION

UNLESS OTHERWISE SPECIFIED

1. ALL DIMENSIONS IN INCHES
   -TWO PLACE DECIMALS ±0.01
   -THREE PLACE DECIMALS ±0.005
   -FRACTIONAL DIMENSIONS ±1/64
   -ANGLES ±1°
   -ALL DIA. CONCENTRIC WITHIN 0.005 T.I.R.
2. FEATURES ON THE SAME CENTERLINE MUST BE ALIGNED WITHIN ±0.002
3. REMOVE ALL BURRS

DO NOT SCALE DRAWING

THIS DRAWING DESCRIBES A DESIGN CONSIDERED PROPRIETARY IN NATURE, DEVELOPED AND MANUFACTURED BY SWITCHCRAFT INC. AND IS RELEASED ON A CONFIDENTIAL BASIS FOR IDENTIFICATION PURPOSES ONLY.

SIZE	WIDTH	MULT	LBS/M	TEMPER

FINISH
SPEC No.

MATERIAL
SPEC No.

FIRST USED ON	SCALE
	4:1

DATE DRAWN	BY	CHKD	APVD
4-27-95	MA	SG 1-8-96	MA 1-8-96

Switchcraft®
www.DataSheet4U.com

SHEET | OF |

NAME
POWER JACK, PC MOUNT
0.08 [2,0mm] PIN

PART No. RAPC722

REV H

B

ROUTING 146 112