imperix

Power interface – For RT Box hardware

plexim

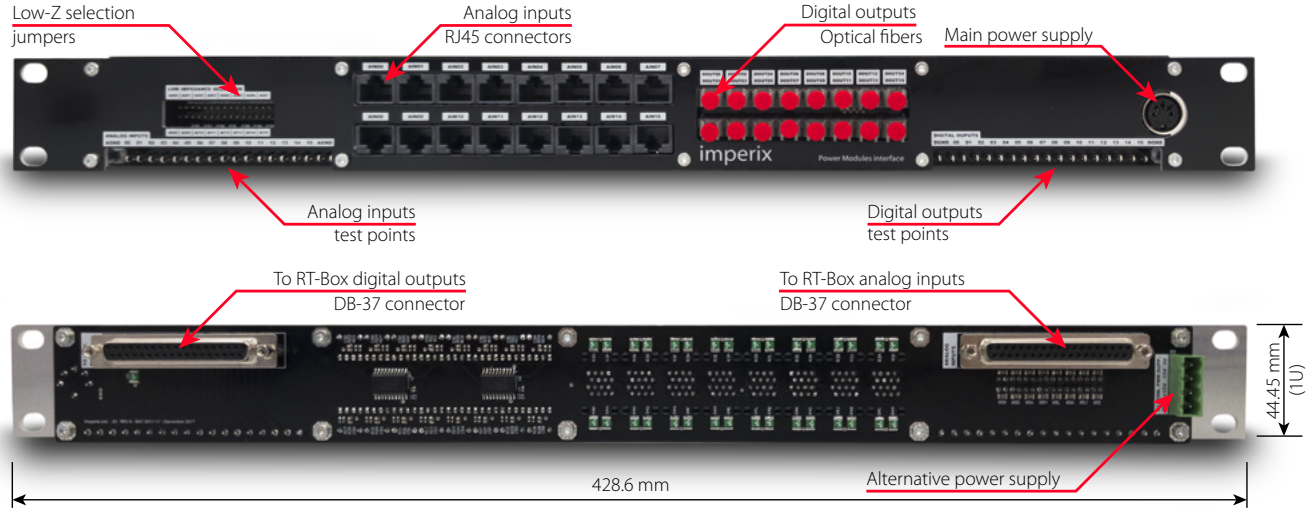

GENERAL DESCRIPTION

This interface allows to control **imperix** power modules with an **RT-Box** simulator. It provides the necessary signal connections and transformations to easily wire the digital outputs of the RT-Box hardware to the command inputs of the power modules, and retrieve any useful measurement to its analog inputs.

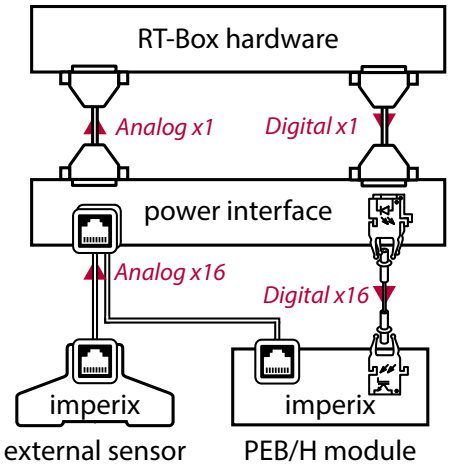

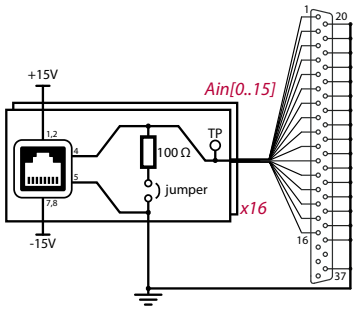

ANALOG INPUTS

- 16 channels, RJ45 connectors, -10 to 10V input voltage
- Configurable high-Z or low-Z input (connect jumper for 100Ω low-Z)
- +15V/-15V sensor supply (max 100mA/ch, 800mA tot)

The user is responsible of the behavior of the OPAL-RT controller. In particular, the complementarity of the gating signals must be ensured at all time, when the control algorithm is running. It is recommended to power down and discharge the converter prior to any operation that could lead to hazardous gating signals, such as starting up/shutting down the controller, flashing code, disconnecting cables, etc. In addition, only one external power supply must be connected to the power interface at a time.
Disregarding this warning may lead to injury and/or cause serious damage.

POWER SUPPLY

- 5V / +15V / -15V external supply required
- Approx. max consumption: 5W / 12W / 12W
- Recommended external supply: *XP Power AEH45UM32*
- Connector pinouts:

Main power supply connector (SD-50BV)

Pin1 GND
Pin2 GND
Pin3 +5V
Pin4 -15V
Pin5 +15V
Pin6 GND

Alternative power supply connector

Pin1 +5V
Pin2 -15V
Pin3 +15V
Pin4 GND

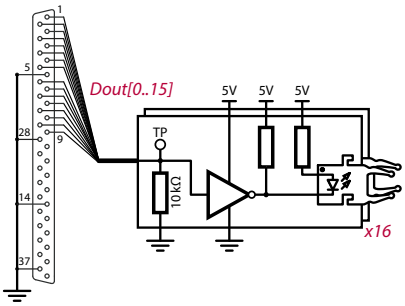

DIGITAL OUTPUTS

- 16 independent channels
- Optical fiber wiring of the gating signals to imperix PEB or PEH power modules
- Max. prop. delay difference between 2 channels: 80ns

CONTACT

Imperix Ltd.
Rue de la Dixence 10, 1950 Sion, Switzerland
www.imperix.ch, sales@imperix.ch

ABOUT US

Imperix develops high-end control equipment and prototyping hardware for power electronics, drives, smart grids and related topics. Its products are designed to accelerate the implementation of laboratory-scale power converters and facilitate the derivation of high quality experimental results.